The Influence Function Technique in the Numerical Analysis of Plate Bending of Arbitrary Plan Form

by

Ali Husain Al-Gadhib

A Thesis Presented to the

FACULTY OF THE COLLEGE OF GRADUATE STUDIES

KING FAHD UNIVERSITY OF PETROLEUM & MINERALS

DHAHRAN, SAUDI ARABIA

In Partial Fulfillment of the
Requirements for the Degree of

MASTER OF SCIENCE

In

CIVIL ENGINEERING

September, 1982

Order Number 1355718

The influence function technique in the numerical analysis of plate bending or arbitrary plan form

Al-Gadhib, Ali Husain, M.S.

King Fahd University of Petroleum and Minerals (Saudi Arabia), 1982

U·M·I
300 N. Zeeb Rd.
Ann Arbor, MI 48106

THE INFLUENCE FUNCTION TECHNIQUE IN THE NUMERICAL ANALYSIS OF PLATE BENDING OF ARBITRARY PLAN FORM

by

ALI HUSAIN AL-GADHIB

THESIS

Presented to

THE COLLEGE OF GRADUATE STUDIES
University of Petroleum & Minerals
Dhahran, Saudi Arabia

In Partial Fulfillment of the
Requirements for the Degree of

MASTER OF SCIENCE IN CIVIL ENGINEERING

SEPTEMBER 1982

UNIVERSITY OF PETROLEUM & MINERALS
Dhahran, Saudi Arabia

College of Graduate Studies

This thesis, written by Mr. Ali Husain Al-Gadhib under the direction of his Thesis Committee, and approved by all its members, has been presented to and accepted by the Dean, College of Graduate Studies, in partial fulfillment of the requirements for the degree of M.S. in Civil Engineering.

Dean College of Graduate Studies

Date

Al-Tayyib, A.J.

Department Chairman

Thesis Committee

Dr. M. H. Baluch
Chairman

(For) M.F.N. Mohsen

Dr. M.F.N. Mohsen
Co-Chairman

Al-Tayyib, A.J.

Dr. A.H.J. Al-Tayyib
Member

to

MY PARENTS

ACKNOWLEDGEMENTS

I wish to express my deepest gratitutde to Dr. M.H. Baluch, who served as my major advisor. My sincere thanks are due to Dr. M. F. N. Mohsen, my co-advisor. Inspite of their tight schedule, they were always available to me for advice and guidance. I am also thankful to Dr. A.H.J.Al-Tayyib, one of the members of my thesis committee, for his guidance and cooperation.

I acknowledge with grateful thanks the financial assistance provided to me by the University of Petroleum and Minerals, for completing the M.S. program.

I have no words to describe the patience of my wife and the moral support and encouragement given to me by her during the course of my M.S. program.

Acknowledgement is due to Mr. Ismail Ahmed Wangde for typing this thesis neatly.

CONTENTS

chapter		*page*
	Acknowledgement	(iv)
	List of Tables	(vii)
	List of Figures	(viii)
	Abstract	1
1.	INTRODUCTION	2
2.	THEORETICAL PRELIMINARIES	5
	2.1 Background	5
	2.2 Boundary Conditions	12
3.	FORCE OR WU-ALTIERO METHOD	16
	3.1 Green's Function for Finite Rectangular Plate of Simply Supported Boundaries	16
	3.2 Green's Function of an Infinite Plates	19
	3.3 The Wu-Altiero Method	19
4.	APPLICATION OF WU-ALTIERO METHOD	29
	4.1 Evaluation of the Load Vector B	29
	4.2 General Flowchart of Forces Method	34
	4.3 Application of Wu-Altiero Method	37
5.	MOMENT METHOD	43
	5.1 Moment Influence Function	43
	5.2 Moment Method Concept	44

chapter *page*

6. APPLICATION OF MOMENT METHOD 52

7. MIXED MODE METHOD 60

8. DISCUSSION AND CONCLUSION 68

References 86

Appendices 87

LIST OF TABLES

Table		*page*
4.1	The Force Method (Square Plate)	41
4.2	The Force Method (Triangular Plate)	42
6.1	The Moment Method (Square Plate)	58
6.2	The Moment Method (Traingular Plate)	59
7.1	The Mixed Mode Method (Square Plate)	66
7.2	The Mixed Mode Method (Traingular Plate)	67
8.1	Three Methods Deflections (Square Plate)	72
8.2	Three Methods Deflection (Triangular Plate	73
8.3	Deflections Using the Force Method (SP)	74
8.4	Deflections Using the Force Method (DP)	75
8.5	Deflections Using the Moment Method (SP)	76
8.6	Deflections Using the Moment Method (DP)	77
8.7	Deflections Using the Mixed Mode Method (SP)	78
8.8	Deflections Using the Mixed Mode Method (DP)	79
8.9	Rate of Convergence Using I_1	80
8.10	Rate of Convergence Using I_2	81
8.11	Rate of Convergence Using I_3	82

LIST OF FIGURES

Figure		*Page*
1	Plate Geometry	6
2	Infinitesimal Plate Elements with Internal Stress Resultants	8
3	Geometry of Plate Deformation	10
4	Plate of Arbitrary Plan Form	14
5	Concentrated Force P at $x = \xi$, $y = \eta$	17
6	Radius of Influence "a"	20
7	Physical Interpretation of Wu-Altiero Model as Applied to Beams	22
8	Plate with Parallel Contour (Point Force Method)	24
9	Discretization of Plate Domain for Evaluation of (Load * Area) Integrals	31
10	Square Plate 10 m * 10 m with Parallel Contours C_1 and C_2	39
11	Triangular Plate with Parallel Contours C_1 and C_2	40
12	Local and Global Coordinates Systems for Fictitious Force F	45
13	Local and Global Coordinates Systems for Fictitious Moment M	47
14	Plate with Parallel Contour (Point Moment Method)	48
15	Plate and Contour Geometry (Mixed Mode Method)	62
16	Transformation of Coordinates	87

Figure		*Page*
17	Comparison of the Convergence of the Three Methods	83
18	Square Plate Contour Location Range	84
19	Rate of Convergence of Maximum Bending Moment (Square Plate)	85

ABSTRACT

A numerical method for the solution of thin plate problems of arbitrary plan form and subjected to arbitrary loading and boundary conditions is presented in this thesis. This method is an extension of the Wu-Altiero method where use has been made of the force influence function for an infinite plate, whereas the work contained in this thesis is based on the use of the moment influence function of an infinite plate. The technique basically involves embedding the real plate into a fictitious infinite plate for which the moment influence function is known. N points are prescribed at the plate boundary at which the boundary conditions for the original problem are collocated by means of 2N fictitious moments placed around contours outside the domain of the real plate. A system of 2N linear algebraic equations in the unknown moments is obtained. The solution of the system yields the unknown moments. These may in turn be used to compute deflection, moments or shear at any point in thin plate.

Finally, the method is extended to include influence functions of both concentrated forces and concentrated moments. This is obtained by applying concentrated moments and forces simultaneously on the contours located outside the domain of the plate.

الخلاصـــــــــــــــــــــــــــــــه

فى هـــذه الأطـــروحة طريقة عدديـــة لحل مسائل الصفائـــح الرقيقـــــــــــــــــة ذوات الأشكـــــال المطلقـــة والمعرضـــة لأثقال وظـــروف حدوديـــة مطلقـــة أيضـــــــــا . هـــذه الطريقة هـى أمتـــداد لطريقـــة و ـ اليتـــرو حيث أستخـــدمت دالـــــــــــة تأثير القـــوة للصفائـــح الغيـــر متناهيـــة فى حيـــن ان هـــذه الأطـــروحة تعتمـــــد على أستخـــدام دالـــة تأثيـــر العـــزوم للصفائـــح الغير متناهية . فكـــرة الطريقـــة تعتمـــد على غمـــر الصفيحـــة الأصليـــة داخل صفيحـــة خياليـــة غيـــر متناهيـــــــــة والمعـــروف دالـــة تأثيـــر العـــزوم لـــها . ن نقطـــة على حـــدود الصفيحـــة الأصليـــــة ســـوف تكتسب نفـــس الظـــروف الحـــدودية بواسطـــة ٢ ن عـــزوم خياليـــة واقعـــــــــة حـــول منحنـــى مقفـــل خـــارج مجـــال الصفيحـــة الأصليـــة وسيحصـــل على مجموعـــــــــة منظمـــــة من ٢ ن معادلة جبرية خطيـــة بمعلوميـــة العزوم . وبحـــل هـــذه المجموعـــة ينتج ٢ ن عزوم . هذه العـــزوم سوف تستخـــدم فى حســـاب الأنحنـــاء والعزم والقـــــص لأى نقطـــــة داخـــل مجـــال الصفيحـــة الرقيقـــة . وأخيـــرا الطريقـــة طورت لتحتـــوى علـــى تأثيـــر كلا من القـــوى والعـــزوم فى آن واحـــد وهذا يتـــم بواسطـــة أستخـــدام القـــوى والعـــزوم المركـــزة والواقعـــة على شكـــــل منحنـــى مقفـــل خارج مجـــــال الصفيحـــــــــــــــة .

chapter **1**

INTRODUCTION

The analysis of the bending problem of isotropic thin-plates is one of the most common problems in structural engineering. Plate theory and methods of solution can be traced back to the early eighteenth century, where a lot of contributors including Euler, Bernoulli and Lagrange were involved in the development of plate theory. In this century, Nadai, Love, Huber, Timoshenko, and Lekhnitskii, to name a few, are well-known for their work related to plate problems.

Mathematically the thin-plate bending problem is a typical boundary value problem inasmuch as the problem may be reduced to the solution of a fourth order partial differential equation subjected to certain boundary conditions. One can obtain a solution analytically for special cases of simple geometrical form and boundary conditions. The problem is complicated if the plate is not of simple plan form. In such cases, analytical approaches essentially breakdown and one is forced to employ numerical techniques such as finite difference [1] or the finite element method [2,3]. Although it is well-known that the finite element method is a powerful technique, it has some disadvantages including a large quantity of input data making implementation tedious and computer time

lengthy. Thus there has been a recent effort to formulate alternative methods, one such effort being the extension of the finite strip method [4], and another is the application of boundary integral techniques [5] to the problem of linear plate theory.

One such method from the family of boundary integral techniques is the Wu-Altiero method [6], where use is made of the force influence function of an infinite plate. The work contained in this thesis is an extension of the Wu-Altiero method and it is based on the use of the Green's function of an infinite plate for the analysis. The technique basically involves embedding the real plate into a fictitious infinite plate for which the Green's function is known. N points are prescribed at the plate boundary at which the boundary conditions for the original problem are to be satisfied. Since there are two boundary condition equations to be satisfied at each boundary point, a set of 2N fictitious moments are placed around contours outside the domain of the actual plate. A system of linear algebric equations in terms of the unknown moments is obtained, which is then solved for all the fictitious moments. The deflection and bending moments any where inside the plate may now be obtained readily.

There are eight chapters in this thesis. Theoretical preliminaries of plate analysis, including the derivation of the governing fourth order partial differential equation for isotropic thin

plates and its associated boundary conditions are presented in Chapter 2. Chapter 3 introduces the idea of Green's function and the concept of the Wu-Altiero method [6]. Chapter 4 consists of two parts, namely (a) the flow chart depicting the main features of the program that was built up to solve the plate problem using the Wu-Altiero concept, and (b) results for the cases dealt with by Wu and Altiero. Using the program developed here at UPM, the conclusion is drawn that this method works irrespective of the value of the arbitrary radius "a" of the infinite plate, in contrast to conclusions drawn by Wu and Altiero, where they restrict the validity of their approach to a certain range of the arbitrary radius "a". Chapter 5 introduces the idea where use is made of the moment influence function in lieu of the force influence function and presents the necessary deviations. Chapter 6 explains features of the program written for the moment influence method in the form of a flow chart and the method by solving the cases considered by Wu and Altiero. After verifying the point force method and developing and establishing the validity of the point moment method, the superposition of both point forces and moments acting concurrently is the topic of Chapter 7. Chapter 8 concludes the thesis with a discussion of the results and a bit summary of the main features.

chapter **2**

THEORETICAL PRELIMINARIES

2.1 Background

The purpose of this chapter is to give the necessary background of plate theory, including the governing differential equation and the accompanying boundary conditions.

A plate can be defined as a three dimensional object where two dimensions are much greater than the third dimension (thickness h). The plane which is parallel to the faces of the plate and divides the thickness into equal halves is termed the midsurface of the plate Fig. 1. Now consider the isotropic thin plate of small deflection in Fig. 1, in which the x, y plane coincides with the midsurface. When one talks about the deflection of the plate, the actual reference is to the deflection of the midsurface. The z coordinates of all the points forming the midsurface is zero. The governing differential equation in terms of the plate deflection may be developed by making the following assumptions :

1. The deflection of the midsurface is small in comparison with the thickness of the plate. The slope of the deflected surface is much less than unity.

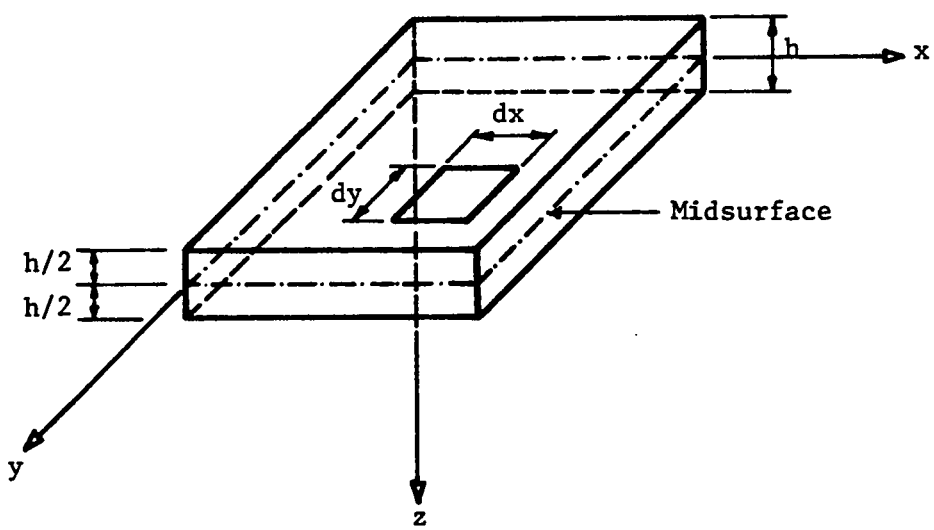

Figure 1 : Plate Geometry

2. There is only vertical displacement of the middle plane of the plate, i.e. the midsurface of the plate suffers no displacement in the x or y directions.
3. Planes initially normal to the midsurface of the plate remain normal to the midsurface of the plate after bending.
4. The normal stresses in the direction transverse to the plate can be neglected.

In order to obtain the governing differential equation of the plate, one starts with the equilibrium of differential element of area dxdy subjected to a distributed load q of plate in Fig.1 and for the load to be carried, internal moments and shears must be developed that is shown in Fig. 2 after exaggeration.

Apply equations of equilibrium to the element of Fig. 2

$$\Sigma F_z = 0 \qquad \frac{\partial Q_x}{\partial x} + \frac{\partial Q_y}{\partial y} + q = 0$$

$$\Sigma M_x = 0 \qquad \frac{\partial M_{xy}}{\partial x} + \frac{\partial M_y}{\partial y} - Q_y = 0 \qquad (2.1)$$

$$\Sigma M_y = 0 \qquad \frac{\partial M_{yx}}{\partial y} + \frac{\partial M_x}{\partial x} - Q_x = 0$$

Eliminating the shearing forces Q_x and Q_y from the above equations leads to

$$\frac{\partial^2 M_x}{\partial x^2} + \frac{\partial^2 M_y}{\partial y^2} + 2\frac{\partial^2 M_{xy}}{\partial x \partial y} = -q \qquad (2.2)$$

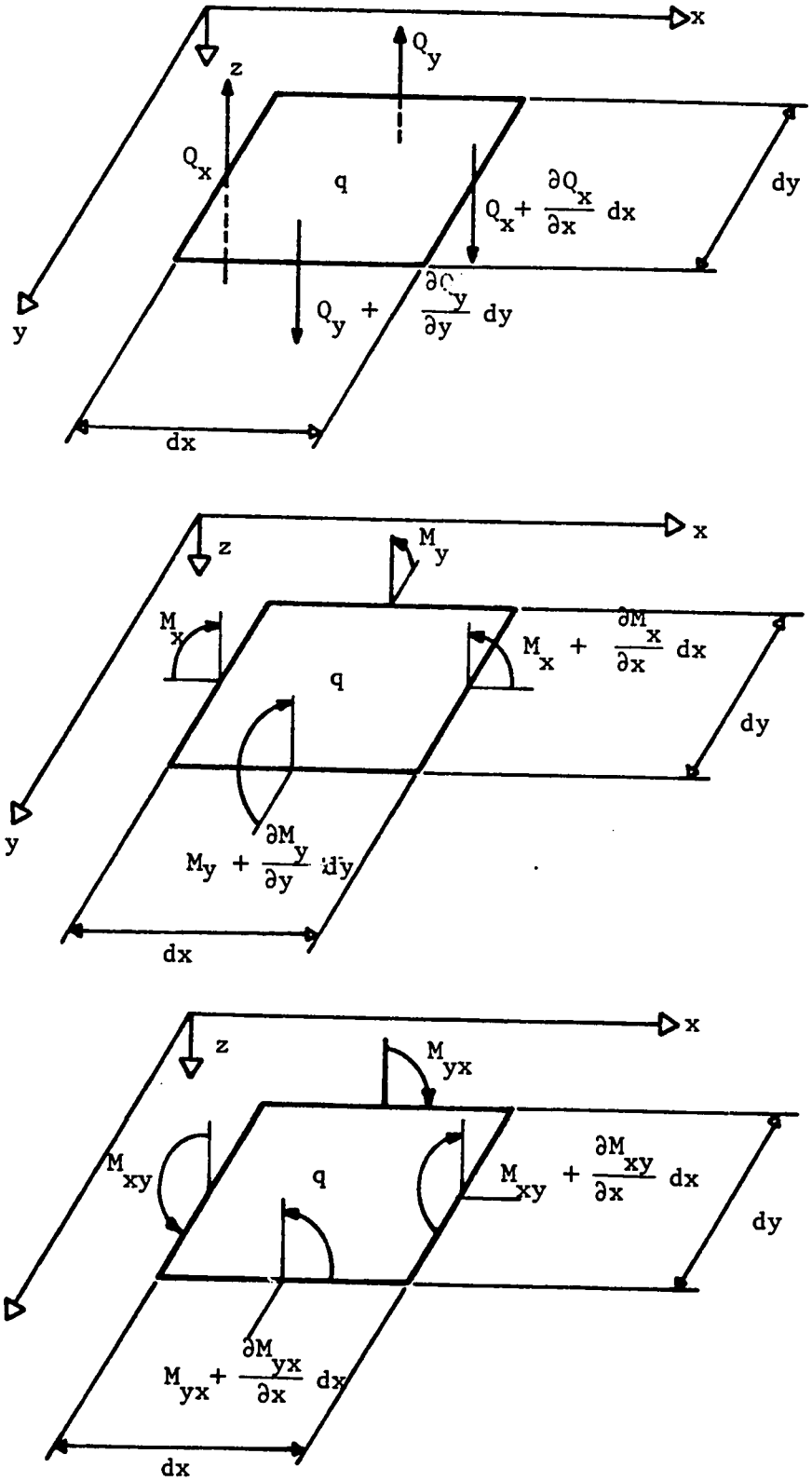

Figure 2 : Infinitesimal Plate Elements with Internal Stress Resultants

Now we want to express the moment in terms of deflection. By referring to Fig. 3, point A, which has undeformed coordinates (X_A, Y_A, 0), after application of the external load, will suffer a deflection w as shown in Fig.3. Since $\frac{\partial w}{\partial x}$ is very small, one may write

$$\tan \frac{\partial w}{\partial x} = \frac{\partial w}{\partial x} = - \frac{u}{z} \qquad u = -z \frac{\partial w}{\partial x} \tag{2.3}$$

Similarly along the y direction

$$v = - z \frac{\partial w}{\partial y}$$

where u,v represent the displacements of point B (Fig.3b) in the x,y directions, respectively.

<u>Strain-displacement Relationships</u>

$$\varepsilon_x = \frac{\partial u}{\partial x}$$

$$\varepsilon_y = \frac{\partial v}{\partial y} \tag{2.4}$$

$$\gamma_{xy} = \frac{\partial u}{\partial y} + \frac{\partial v}{\partial x}$$

Using (2.3) in (2.4)

$$\varepsilon_x = -z \frac{\partial^2 w}{\partial x^2}$$

$$\varepsilon_y = -z \frac{\partial^2 w}{\partial y^2} \tag{2.5}$$

$$\gamma_{xy} = -2z \frac{\partial^2 w}{\partial x \partial y}$$

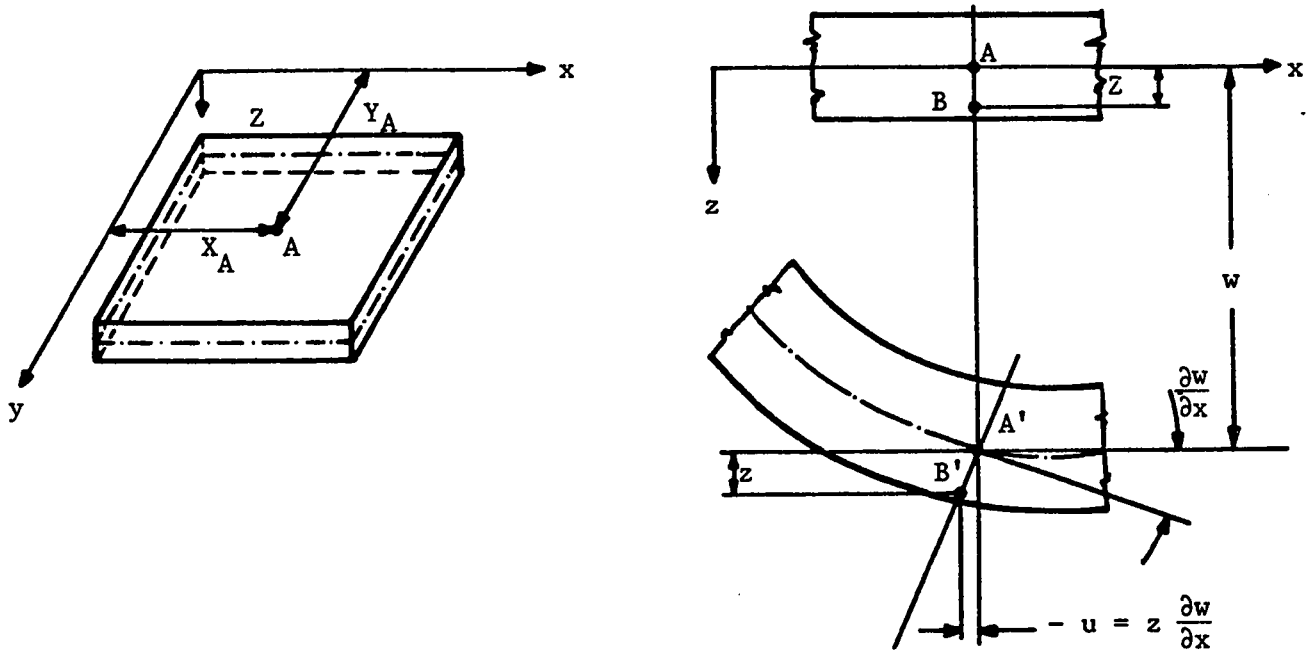

Figure 3 : Geometry of Plate Deformation

Stress-strain Relationship

$$\sigma_x = \frac{E}{1-\nu^2}(\varepsilon_x + \nu\varepsilon_y)$$

$$\sigma_y = \frac{E}{1-\nu^2}(\varepsilon_y + \nu\varepsilon_x) \qquad (2.6)$$

$$\tau_{xy} = \frac{-E}{2(1+\nu)}\gamma_{xy}$$

Using (2.5) in (2.6)

$$\sigma_x = \frac{-zE}{1-\nu^2}\left(\frac{\partial^2 w}{\partial x^2} + \nu\frac{\partial^2 w}{\partial y^2}\right)$$

$$\sigma_y = \frac{-zE}{1-\nu^2}\left(\frac{\partial^2 w}{\partial y^2} + \nu\frac{\partial^2 w}{\partial x^2}\right) \qquad (2.7)$$

$$\tau_{xy} = \frac{-zE}{1+\nu}\frac{\partial^2 w}{\partial x \partial y}$$

Moments-strain Relation

$$M_x = \int_{-h/2}^{h/2} z\sigma_x dz$$

$$M_y = \int_{-h/2}^{h/2} z\sigma_y dz \qquad (2.8)$$

$$M_{xy} = \int_{-h/2}^{h/2} z\tau_{xy} dz$$

Using (2.7) in (2.8)

$$M_x = -D\left(\frac{\partial^2 w}{\partial x^2} + \nu \frac{\partial^2 w}{dy^2}\right)$$

$$M_y = -D\left(\frac{\partial^2 w}{\partial y^2} + \nu \frac{\partial^2 w}{dx^2}\right) \qquad (2.9)$$

$$M_{xy} = -D\,(1 - \nu)\,\frac{\partial^2 w}{\partial x \partial y}$$

where :

$$D = \frac{\varepsilon h^3}{12(1-\nu^2)}$$

Using (2.9) in (2.2)

$$\frac{\partial^4 w}{\partial x^4} + 2\,\frac{\partial^4 w}{\partial x^2 \partial y^2} + \frac{\partial^4 w}{\partial y^4} = \frac{q}{D} \qquad (2.10)$$

Equation (2.10) is the governing differential equation of plate or in concise form $\Delta^4 w = \frac{q}{D}$.

2.2 Boundary Conditions

Knowing the governing differential equation, one needs to know the different types of boundary conditions. The boundary of the plate may be any combination of the following three types, clamped edge, simply supported edge, and free edge provided that the plate is stable. If all the plate boundaries are denoted by B, then the following can be written as :

$$B = B_C + B_S + B_f$$

where :

B_C represents the clamped portion of plate

B_S represents the simply supported portion of plate

B_f represents the free portion of plate.

as shown in Figure 4.

For the clamped or simply supported boundaries, deflection equals to zero as indicated in Equation (2.11). Also for clamped edge, the slope of the deflection with respect to the outer normal equals to zero as indicated in Equation (2.12). For the simply supported edge or free edge, the bending moment equals to zero as indicated in Equation (2.13). For the free edge, Kirchoaf's shear is zero indicated in Equation (2.14).

$$w = 0 \qquad \text{on } B_C+B_S \qquad (2.11)$$

$$n_x \frac{\partial w}{\partial x} + n_y \frac{\partial w}{\partial y} = 0 \qquad \text{on } B_C \qquad (2.12)$$

$$f_1 \frac{\partial^2 w}{\partial x^2} + f_2 \frac{\partial^2 w}{\partial x \partial y} + f_3 \frac{\partial^2 w}{\partial y^2} = 0 \qquad \text{on } B_S+B_f \qquad (2.13)$$

$$g_1 \frac{\partial^3 w}{\partial x^3} + g_2 \frac{\partial^3 w}{\partial x^2 \partial y} + g_3 \frac{\partial^3 w}{\partial x \partial y^2} + g_4 \frac{\partial^3 w}{\partial y^3} = 0 \qquad \text{on } B_f \qquad (2.14)$$

where $n_x(x,y)$, $n_y(x,y)$ are components of the outer normal directed unit normal to B and f_1 through g_4 are given by the following relationships [6].

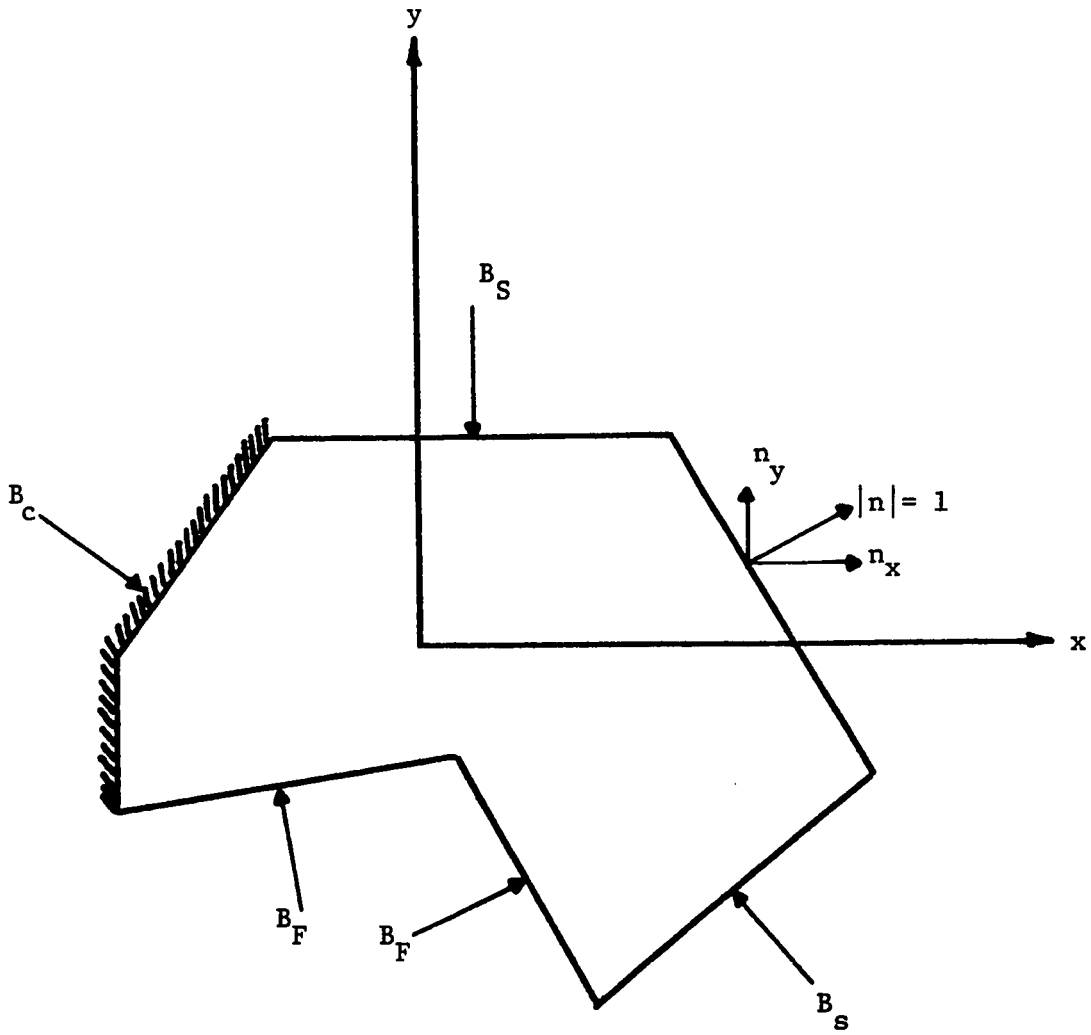

Figure 4 : Plate of Arbitrary Plan Form

$$f_1 = Dn_x^2 + \nu Dn_y^2$$

$$f_2 = 2(1 - \nu)\, Dn_x n_y$$

$$f_3 = \nu Dn_x^2 + Dn_y^2$$

$$g_1 = Dn_x\,(1 + n_y^2) - \nu Dn_x n_y^2$$

$$g_2 = \nu Dn_y\,(1 + n_x^2) + 2(1 - \nu)\, Dn_y^3 - Dn_x^2 n_y$$

$$g_3 = \nu Dn_x\,(1 + n_y^2) + 2(1 - \nu)\, Dn_x^3 - Dn_x n_y^2$$

$$g_4 = Dn_y\,(1 + n_x^2) - \nu Dn_x^2 n_y$$

chapter **3**

FORCE OR WU-ALTIERO METHOD

3.1 Green's Function for Finite Rectangular Plate of Simply Supported Boundaries

The Navier solution for a rectangular plate with simply supported boundaries under the action of a concentrated force P as shown in Fig. 5, is given in [1] as

$$w(x,y) = \frac{4P}{\pi^4 abD} \sum_{m=1}^{\infty} \sum_{n=1}^{\infty} \frac{\sin\frac{m\pi\xi}{a} \sin\frac{m\pi\eta}{b} \sin\frac{m\pi x}{a} \sin\frac{m\pi y}{b}}{\left(\frac{m^2}{a^2} + \frac{n^2}{b^2}\right)^2} \tag{3.1}$$

where $w(x,y)$ is the deflection at any point (x,y) of a rectangular simply supported plate subjected to concentrated force P located at $x = \xi$, $y = \eta$.

Consider the following expression

$$I(x,y,\xi,\eta) = \frac{4}{\pi^4 abD} \sum_{m=1}^{\infty} \sum_{n=1}^{\infty} \frac{\sin\frac{m\pi\xi}{a} \sin\frac{m\pi\eta}{b} \sin\frac{m\pi x}{a} \sin\frac{m\pi y}{b}}{\left(\frac{m^2}{a^2} + \frac{n^2}{b^2}\right)^2} \tag{3.2}$$

which is the same as (3.1) for the concentrated force $P = 1$. Expression (3.2), which gives the deflection at any point (x,y)

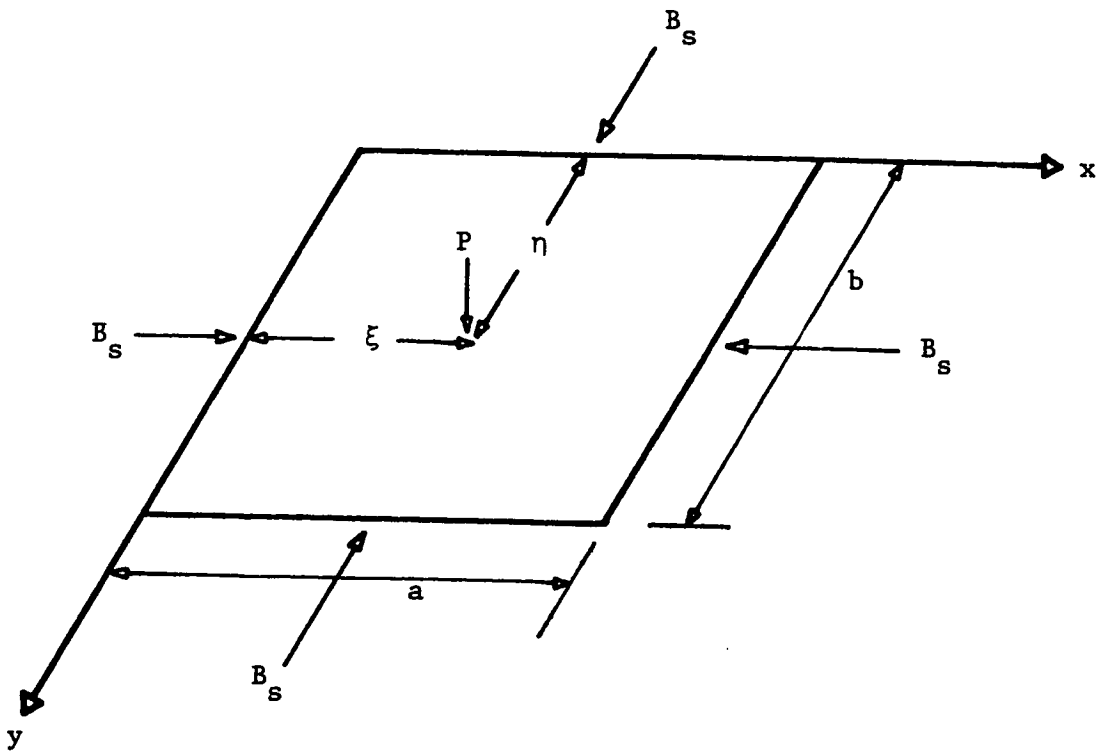

Figure 5 : Concentrated Force P at $x = \xi$, $y = \eta$

when the unit force is applied at $x = \xi$, $y = \eta$ of the rectangular simply supported plates is called the Green's function of the plate associated with the simply supported conditions. Thus the Green's function is nothing but the deflection caused either by unit load (or unit moment) located at $x = \xi$, $y = \eta$ of a plate. One may obtain a variety of Green's functions for plates of different shapes and boundary conditions.

The deflection due to a distributed load may be found by means of the force influence function (Green's function). The distributed load can be represented by a set of concentrated loads at ξ's and η's and by the principle of superposition, the deflection due to the distributed load is approximately the deflection due to these set of concentrated loads as in Equation (3.3).

$$w(x,y) = \sum_{i=1}^{n} P_i I(x,y,\xi_i,\eta_i) \tag{3.3}$$

where

$$P_i = f(\xi,\eta)_i \ (\text{Area})_i \tag{3.3a}$$

and n is number of concentrated loads.

The exact deflection of the plate due to the distributed load is to use Equation (3.3) and change the summation by double integrals and replace P_i by (3.3a) which then yields

$$w(x,y) \int\int_{A(=\text{loaded area})} f(\xi,\eta)\ I(x,y,\xi,\eta)\ d\xi dy \tag{3.4}$$

3.2 Green's Function of an Infinite Plate

Our interest is to find the Green's function of an infinite plate of arbitrary radius a.

Load P which is located at $x = \xi$, $y = \eta$ causes a deflection at point (x,y) of the infinite plate of radius a (See Fig.6). This deflection is given in [1] as

$$w(x,y) = \frac{Pr^2}{8\pi D} \ln \frac{r}{a}$$

or

$$w(x,y) = \frac{Pr^2}{16\pi D} \ln \frac{r^2}{a^2} \tag{3.5}$$

and from this expression, one can get the Green's function of the infinite plate of arbitrary radius a by setting P = 1

$$I(x,y,\xi,\eta) = \frac{r^2}{16\pi D} \ln \frac{r^2}{a^2} \tag{3.6}$$

3.3 The Wu-Altiero Method

The Wu-Altiero method is easily explained if one considers the problem of the bending of beams. The deflection of the beam shown in Fig. 7 (a) due to the action of a uniform distributed load q may be solved by the superposition of two cases - Case one in Fig. 7 (b) when one finds the deflection caused by the uniformly distributed load q of the real beam on an infinite beam, and the second case where one

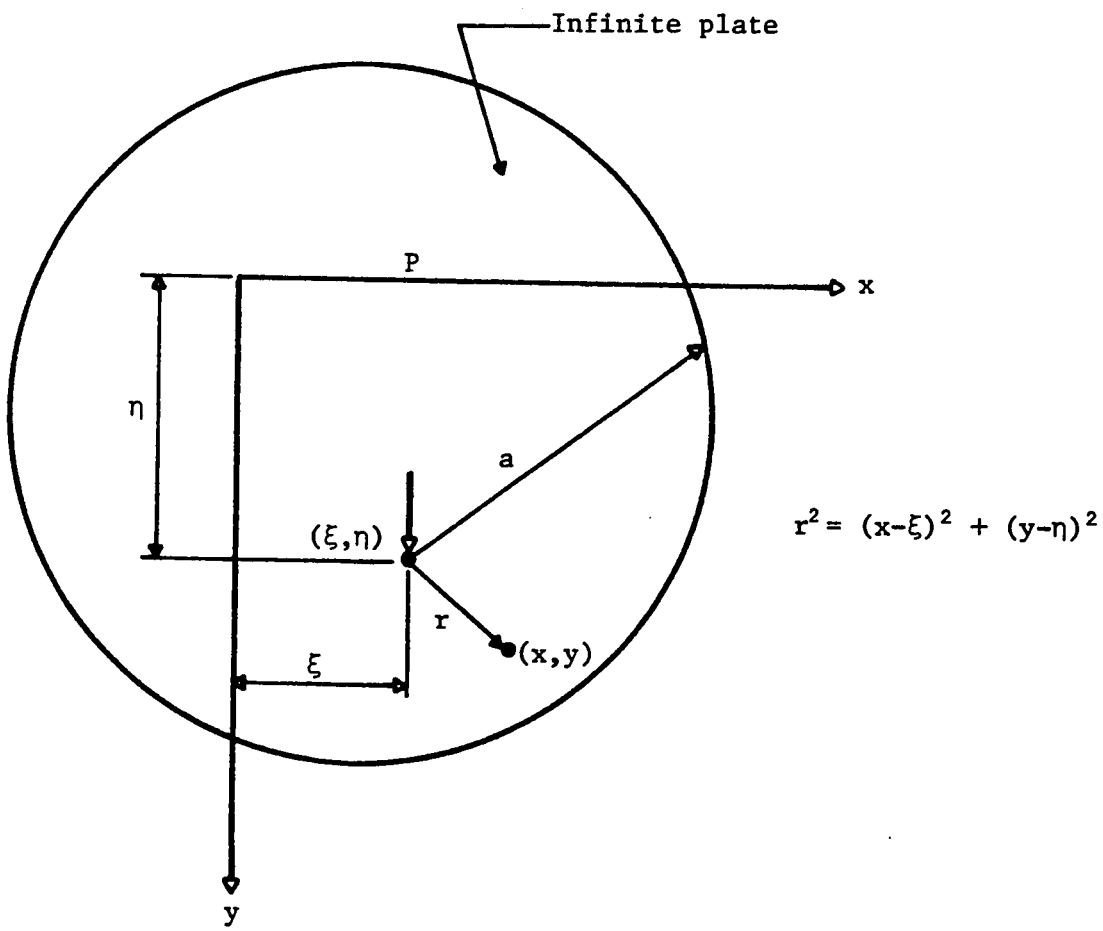

Figure 6 : Radius of Influence "a"

obtains the deflection due to unknown fictitious forces placed outside the domain of the real beam as shown in Fig. 7 (c). Thus the deflection of the real beam in Fig.7 (a) is the superposition of the two cases as shown in Fig.7 (b) and Fig.7 (c) and given by the following equation

$$v(x) = \overset{\infty}{v}_{UDL}(x) - \sum_{i=1}^{N} \overset{\infty}{v}_{P_i}(x) \qquad (3.7)$$

where

P_i = The ith fictitious load

$\overset{\infty}{v}_{UDL}$ = Deflection of the infinite beam when subjected to uniformly distributed load which is acting on the real beam

$\overset{\infty}{v}_{P_i}$ = Deflection of the infinite beam subjected to fictitious force P_i

N = Number of fictitious forces

The first part of Equation (3.7) may be obtained readily and the second part is not difficult to obtain if one knows the magnitude of the fictitious forces. The main task is thus reduced to finding these unknown fictitious forces and this may be done by the collection of the following boundary conditions :

deflection = 0 at x = 0 i.e. $v(0) = 0$

deflection = 0 at x = L i.e. $v(L) = 0$

moment = 0 at x = 0 i.e. $EI \dfrac{d^2v(0)}{dx^2} = 0$

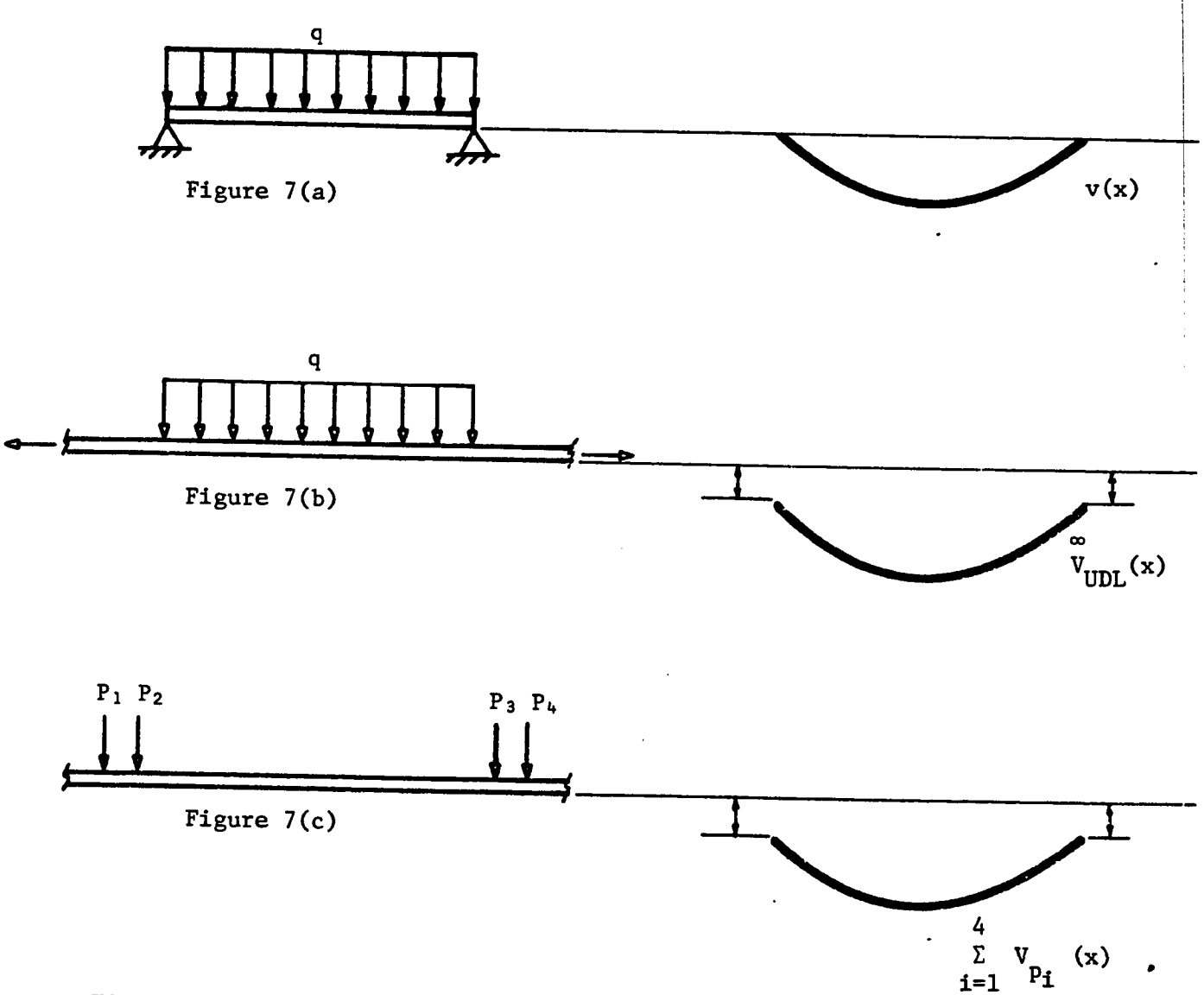

Figure 7 : Physical Interpretation of Wu-Altiero Model as Applied to Beams

$$\text{moment} = 0 \quad \text{at} \quad x = L \quad \text{i.e.} \quad EI \frac{d^2v(L)}{dx^2} = 0$$

In doing so, one obtains four algebric equations in terms of the unknown forces. Thus one can have fictitious loads equal in number to the boundary conditions. Now after knowing all the unknown forces, one can compute v(x) in Equation (3.7) completely.

Exactly almost what was true for the beam is true for the plate. The solution of plate deflection involves embedding the real plate into a fictitious infinite plate of the same material as in Fig.8. The deflection of the real plate is the superposition of two solutions - one solution being the deflection of the infinite plate when subjected to actual loading of the real plate and the other is the deflection due to 2N fictitious unknown forces placed outside the domain of the real plate in the form of contours - and the total solution, composed of the two previous solutions forced to satisfy the boundary conditions at N discrete points (X_i, y_i) on the boundary B of the plate may be expressed as

$$w(x,y) = \iint_A I(x_i, y_i, \xi, \eta)\, q(\xi,\eta)\, d\xi\, d\eta - \sum_{k=1}^{2N} I(x_i, y_i, \xi_k, \eta_k) P_k \qquad (3.8)$$

The first solution which is the deflection of the infinite

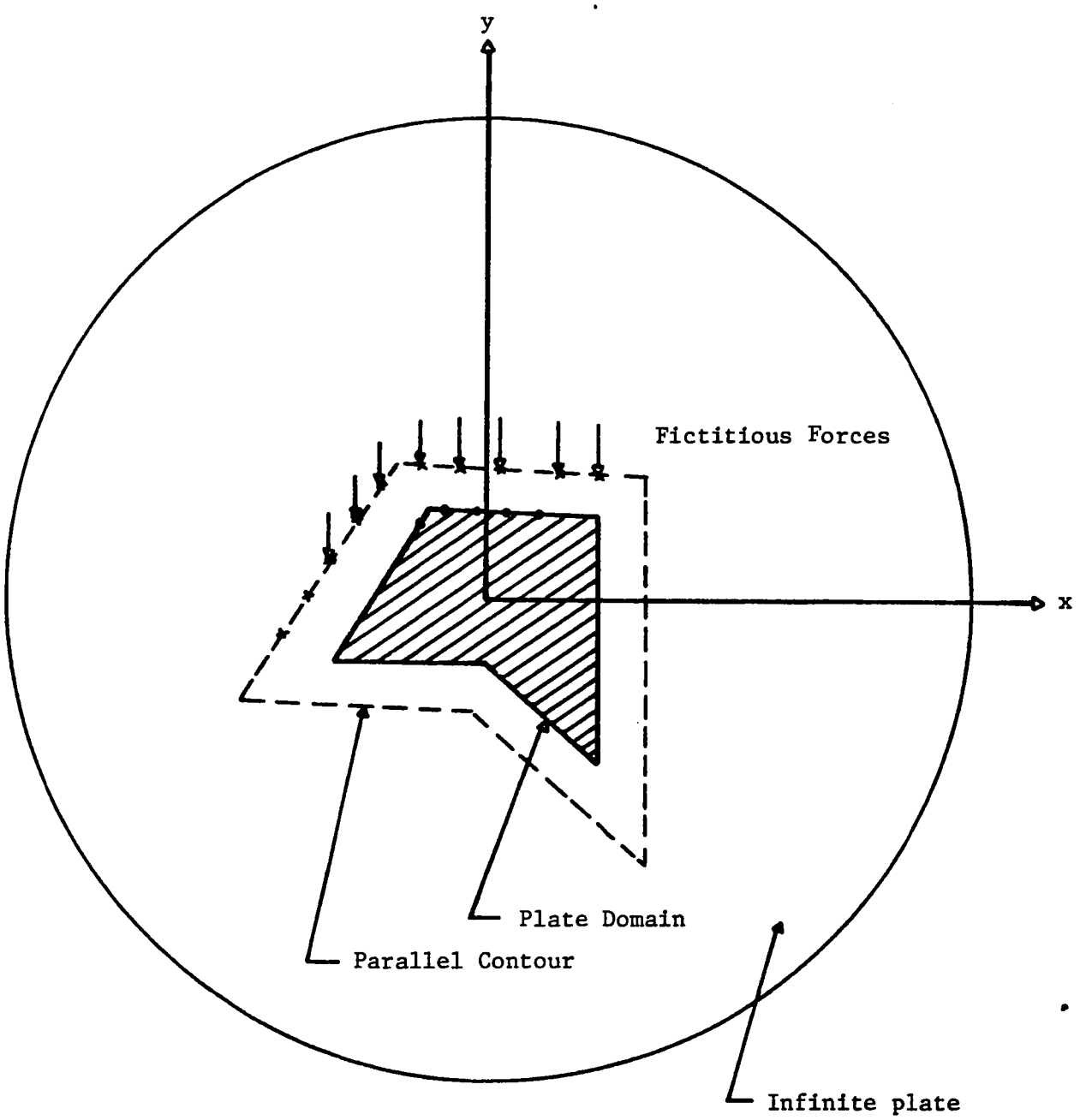

Figure 8 : Plate With Parallel Contour (Point Force Method)

plate under the forcing function can be calculated using the aid of the force influence function of an infinite plate Equation (2.6) and the other solution can be easily found if one knows the magnitude of the fictitious forces. This may be handled by forcing the deflection as given by Equation (3.8) to satisfy the boundary conditions as given by Equations (2.11) through (2.14) that will result in 2N linear algebric equations for the solution of 2N unknowns, P_k's, k = 1, 2N.

Using Equation (3.8) in Equations (2.11), (2.12), (2.13) and (2.14) respectively, yields

$$\sum_{k=1}^{2N} I_{ik}P_k = \iint_R I_i q d\xi d\eta \qquad ((x_i,y_i) \text{ on } B_C+B_S)) \quad (3.9a)$$

$$n_x \sum_{k=1}^{2N} \left(\frac{\partial I}{\partial x}\right)_{ik} P_k + n_y \sum_{k=1}^{2N} \left(\frac{\partial I}{\partial y}\right)_{ik} P_k = n_x \iint_R \left(\frac{\partial I}{\partial x}\right)_i q d\xi d\eta$$

$$+ n_y \iint_R \left(\frac{\partial I}{\partial y}\right)_i q d\xi d\eta \qquad ((x_i,y_i) \text{ on } B_C) \quad (3.9b)$$

$$f_1 \sum_{k=1}^{2N} \left(\frac{\partial^2 I}{\partial x^2}\right)_{ik} P_k + f_2 \sum_{k=1}^{2N} \left(\frac{\partial^2 I}{\partial x \partial y}\right)_{ik} P_k + f_3 \sum_{k=1}^{2N} \left(\frac{\partial^2 I}{\partial y^2}\right)_{ik} P_k$$

$$= f_1 \iint_R \left(\frac{\partial^2 I}{\partial x^2}\right)_i q d\xi d\eta + f_2 \iint_R \left(\frac{\partial^2 I}{\partial x \partial y}\right)_i q d\xi d\eta$$

$$+ f_3 \iint_R \left(\frac{\partial^2 I}{\partial y^2}\right)_i q d\xi d\eta \qquad ((x_i,y_i) \text{ on } B_S+B_f)) \quad (3.9c)$$

$$g_1 \sum_{k=1}^{2N} \left(\frac{\partial^3 I}{\partial x^3}\right)_{ik} P_k + g_2 \sum_{k=1}^{2N} \left(\frac{\partial^3 I}{\partial x^2 \partial y}\right)_{ik} P_k + g_3 \sum_{k=1}^{2N} \left(\frac{\partial^3 I}{\partial x \partial y^2}\right)_{ik} P_k$$

$$+ g_4 \sum_{k=1}^{2N} \left(\frac{\partial^3 I}{\partial y^3}\right)_{ik} P_k = g_1 \iint_R \left(\frac{\partial^3 I}{\partial x^3}\right)_i q\,d\xi d\eta$$

$$+ g_2 \iint_R \left(\frac{\partial^3 I}{\partial x^2 \partial y}\right)_i q\,d\xi d\eta + g_3 \iint_R \left(\frac{\partial^3 I}{\partial x \partial y^2}\right)_i q\,d\xi d\eta$$

$$+ g_3 \iint_R \left(\frac{\partial^3 I}{\partial y^3}\right)_i q\,d\xi d\eta \qquad ((x_i, y_i) \text{ on } B_f) \qquad (3.9d)$$

where

$$I_{ik} = I(x_i, y_i, \xi_k, \eta_k)$$

and $I_i = I(x_i, y_i, \xi, \eta)$

The set of equations (3.9) can be written in a matrix form as

$$AP = B \qquad (3.10)$$

where

P is the fictitious unknown load vector $P^T = [P\ ,P\ ,\ldots P_{2N}]$

A is the following matrix of size 2N x 2N

$$A = \begin{bmatrix} \sum_{k=1}^{2N} I_{ik} & \text{on } B_S+B_C \\ \sum_{k=1}^{2N} \left(n_x\left(\frac{\partial I}{\partial x}\right)_{ik} + n_y\left(\frac{\partial I}{\partial y}\right)_{ik}\right) & \text{on } B_C \\ \sum_{k=1}^{2N} \left(f_1\left(\frac{\partial^2 I}{\partial x^2}\right)_{ik} + f_2\left(\frac{\partial^2 I}{\partial x \partial y}\right)_{ik} + f_3\left(\frac{\partial^2 I}{\partial y^2}\right)_{ik}\right) & \text{on } B_S+B_f \\ \sum_{k=1}^{2N} \left(g_1\left(\frac{\partial^3 I}{\partial x^3}\right)_{ik} + g_2\left(\frac{\partial^3 I}{\partial x^2 \partial y}\right)_{ik} + g_3\left(\frac{\partial^3 I}{\partial x \partial y^2}\right)_{ik} \right. & \\ \left. \quad + g_4\left(\frac{\partial^3 I}{\partial y^3}\right)_{ik}\right) & \text{on } B_f \end{bmatrix}$$

B is the right hand side vector as given by

$$B = \begin{bmatrix} \iint_R I_i q d\xi d\eta & \text{on } B_S+B_C \\ \iint_R \left[n_x\left(\frac{\partial I}{\partial x}\right)_i + n_y\left(\frac{\partial I}{\partial y}\right)_i\right] q d\xi d\eta & \text{on } B_C \\ \iint_R \left[f_1\left(\frac{\partial^2 I}{\partial x^2}\right)_i + f_2\left(\frac{\partial^2 I}{\partial x \partial y}\right)_i + f_3\left(\frac{\partial^2 I}{\partial y^2}\right)_i\right] q d\xi d\eta & \text{on } B_S+B_f \\ \iint_R \left[g_1\left(\frac{\partial^3 I}{\partial x^3}\right)_i + g_2\left(\frac{\partial^3 I}{\partial x^2 \partial y}\right)_i + g_3\left(\frac{\partial^3 I}{\partial x \partial y^2}\right)_i \right. & \\ \left. \quad g_4\left(\frac{\partial^3 I}{\partial y^3}\right)_i q d\xi d\eta\right] & \text{on } B_f \end{bmatrix}$$

where :

k is the column number k = 1, 2N

i = 1,N, and because for each collocation point i two boundary conditions that will generate 2N equations which will be number of rows.

Matrix A accomodates all the possible boundary conditions. Depending on the type of the plate boundary, one chooses the appropriate part of matrix A. For example, if one is solving for a plate with its all edges simply supported one needs to use only the first and the third rows of summation of matrix A. Likewise, if all edges of the plate are clamped, one will use the first and the second rows of summation of matrix A, since these are the two boundary conditions dealing with the clamped edge. However, if the plate edges consist of all types (B_S+B_C+B_f), then all the rows of matrix A are to be needed.

What has been said about Matrix A is equally true for the load vector B. i.e. if one chooses a part of matrix A, one should also take the corresponding part of vector B.

Once again the determination of the fictitious load vector $P^T = [P , P \ldots P_{2N}]$ is the result of solving Equation (3.10). However, in order to be able to solve Equation(3.10), one needs to determine the matrix A and the load vector B which involves derivatives upto the third order of the force influence function $I(x,y,\xi,n)$. These derivatives are evaluated in Appendix A. Subsequently, after solving for the fictitious loads, one can find the deflection any where in the real plate from Equation (3.8). The moment M_x and M_y can also be obtained any where in the region of the real plate from the equations which result from substitution of Equation (3.8) into the formulas for the moments as given by Equation (2.9).

chapter **4**

APPLICATION OF WU-ALTIERO METHOD

4.1 Evaluation of the Load Vector B

As mentioned in Chapter 3, in order to solve for the fictitious forces, one needs to generate the matrix A and the load vector B by using Appendix A which includes all the necessary derivatives. The use of different symbols for the different derivatives will facilitate in the programming.

Recall the force influence function for an infinite plate is

$$I = \frac{(x-\xi)^2 + (y-\eta)^2}{16\pi D} \ln \frac{(x-\xi)^2 + (y-\xi)^2}{a^2}$$

Let $Z = \xi$, $A = \eta$, and $Q_1 = (x-\xi)^2 + (y-\eta)^2$

The Green's function and its derivatives may then be written as the following :

$$I = AIA = \frac{Q_1}{16\pi D} \ln \frac{Q_1}{a^2}$$

$$\frac{\partial I}{\partial x} = A_1 = ((X-Z)/8\pi D)X \ (\ln(Q_1/a^2) + 1)$$

$$\frac{\partial^2 I}{\partial x^2} = A_2 = \frac{1}{8\pi D} (\ln \frac{Q_1}{a^2} + \frac{2(X-Z)^2}{Q_1} + 1)$$

$$\frac{\partial^3 I}{\partial x^3} = A_3 = \frac{(X-Z)}{16\pi D Q_1} (12 - \frac{8(X-Z)^2}{Q_1})$$

$$\frac{\partial I}{\partial y} = B_1 = \left(\frac{Y-A}{8\pi D}\right) \quad \left(\ell n \frac{Q_1}{a^2} + 1\right)$$

$$\frac{\partial^2 I}{\partial y^2} = B_2 = \frac{1}{8\pi D} \left(\ell n \frac{Q_1}{a^2} + \frac{2(Y-A)^2}{Q_1} + 1\right)$$

$$\frac{\partial^3 I}{\partial y^3} = B_3 = \frac{Y-A}{16\pi D Q_1} \left(12 - \frac{8(Y-A)^2}{Q_1}\right) \tag{4.1}$$

$$\frac{\partial^2 I}{\partial x \partial y} = AB_1 = \frac{(X-Z)(Y-A)}{4\pi D Q_1}$$

$$\frac{\partial^3 I}{\partial x^2 \partial y} = AB_2 = \frac{Y-A}{4\pi D Q_1} \left(1 - \frac{2(X-Z)^2}{Q_1}\right)$$

$$\frac{\partial^3 I}{\partial x \partial y^2} = AB_3 = \frac{Y-A}{4\pi D Q_1} \left(1 - \frac{2(Y-A)^2}{Q_1}\right)$$

For evaluating the load vector B which involves a double integration, an approximation by summation is resorted to. The domain of the loaded part of the plate can be discretized to small areas (elements), A_1, $A_2 \ldots A_{NL}$, and the distributed load effect can be approximated by the total effect of a set of concentrated loads, each of magnitude $q_L A_L$, where $L = 1 \rightarrow NL$ and NL = the number of discretized elements as in Figure 9. These concentrated forces are to be placed at the centroid of the area A_L.

In Figure 9, the loaded area of the plate is $(a_1 x b_1)$ and that area is discretized into twelve elements. Each element has an area of $\frac{a_1 b_1}{12}$, thus resulting in a concentrated load of magnitude $\frac{q a_1 b_1}{12}$ at the centroid of each element.

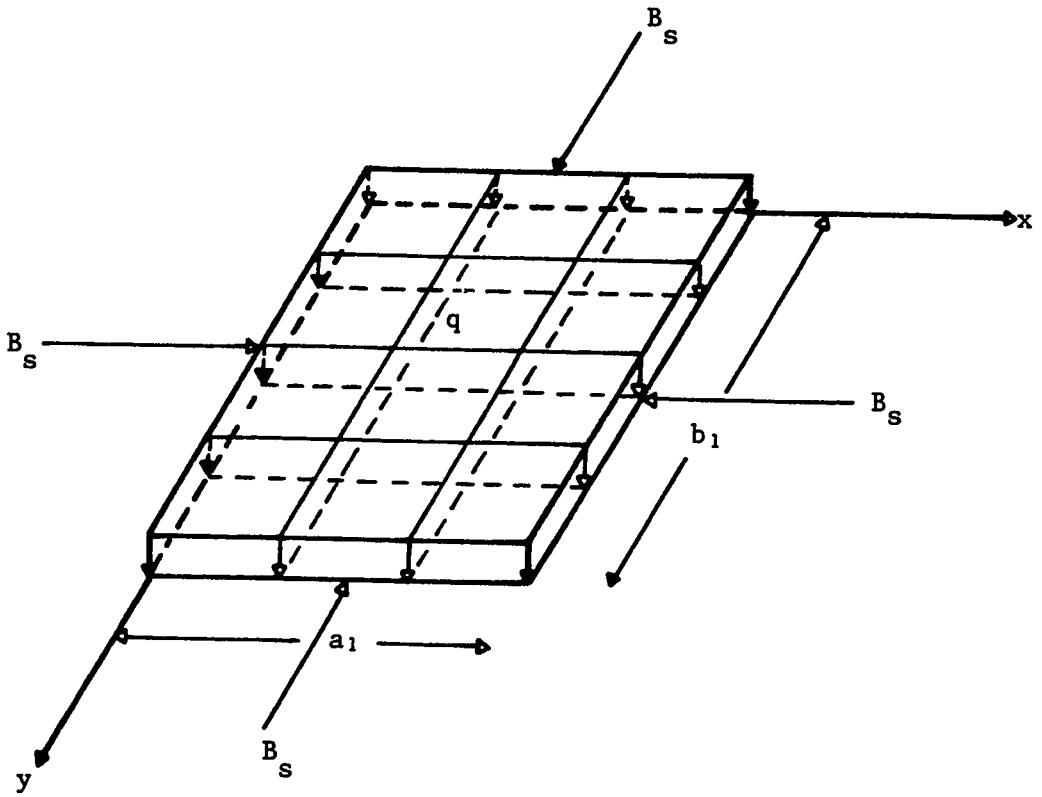

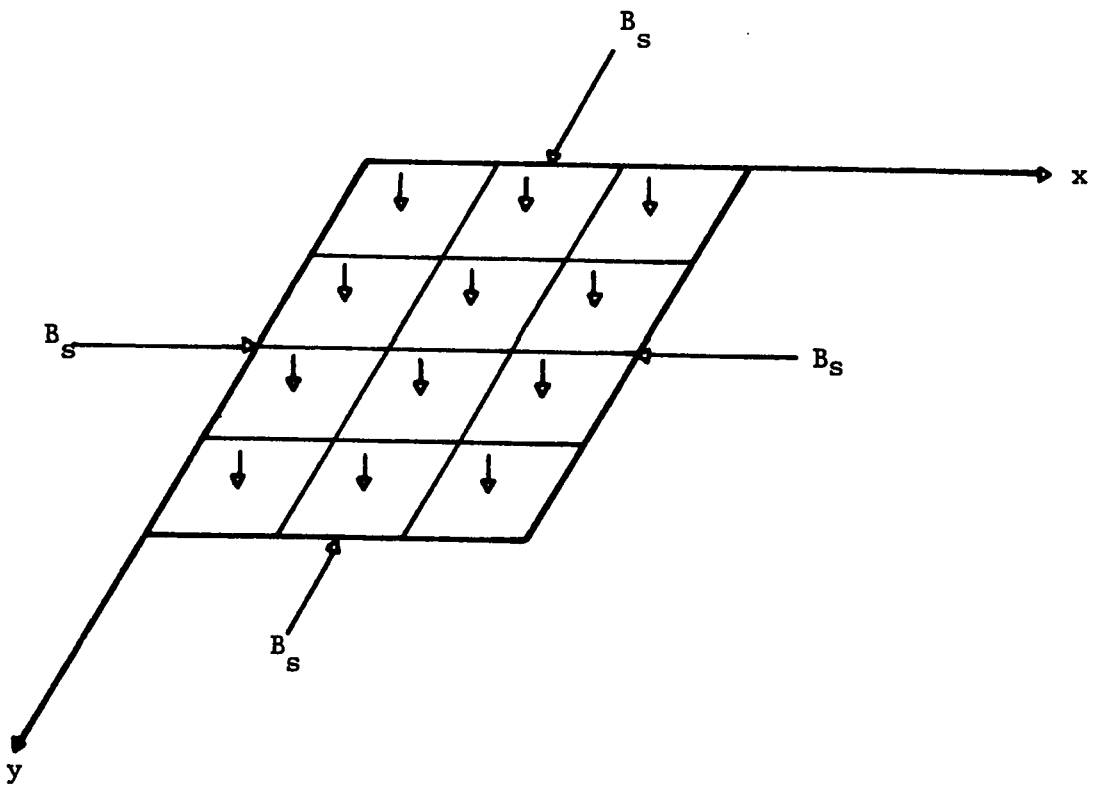

Figure 9 : Discretization of Plate Domain for Evaluation of (Load * Area) Integrals

Employing a summation approximation for the double integral, one obtains

$$\iint_R I_i q_i d\xi d\eta \equiv \sum_{L=1}^{NL} I_{iL} q_L A_L \tag{4.2}$$

Furthermore, if the distributed load is uniform and the loaded domain of the plate is discretized into equal elements, one may rewrite Equation 4.2 as

$$\iint_R I_i q_i d\xi d\eta \equiv qA \sum_{L=1}^{NL} I_{iL} \tag{4.3}$$

If the plate is not of simple geometry one can still handle the evaluation of the load vector B by means of a program similar to that used in finite elements. Such a program will discretize the loaded part of the plate into small triangular elements (areas), which may not necessarily be equal to each other and also yield the centroid of each area in which the concentrated load has to act. In this case, if the plate is subjected to a uniformly distributed load, Equation 4.2 may be written as

$$\iint_R I_i q_i d\xi d\eta \equiv q \sum_{L=1}^{NL} I_{iL} A_L \tag{4.4}$$

Thus equation (4.2) can be used when the distributed load is not uniform and the elements of discretized area are not equal to each other. Depending on the situation, one may use the appropriate equation.

Let us write the matrix A and the vector B in programable fashion using (4.1) and (4.3), with the previous definitions of matrix A and vector B. This is on the assumption that solution is to be generated for a plate subject to uniformly distributed load and discretized into equal elements.

$$A = \begin{bmatrix} \sum_{k=1}^{2N} (AIA)_{ik} & \text{on } B_S+B_C \\ \sum_{k=1}^{2N} (N_x(A_1)_{ik} + N_y(B_1)_{ik}) & \text{on } B_C \\ \sum_{k=1}^{2N} [F_1(A_2)_{ik} + F_2(AB_1)_{ik} + F_3(B_2)_{ik}] & \text{on } B_S+B_f \\ \sum_{k=1}^{2N} [G_1(A_3)_{ik} + G_2(AB_2)_{ik} + G_3(AB_3)_{ik} + G_4(B_3)_{ik}] & \text{on } B_f \end{bmatrix} \quad (4.5)$$

$$B = \begin{bmatrix} qA \sum_{L=1}^{NL} (AIA)_{iL} & \text{on } B_S+B_C \\ qA \sum_{L=1}^{NL} (N_x \cdot A_1 + N_y \cdot B_1)_{iL} & \text{on } B_C \\ qA \sum_{L=1}^{NL} (F_1 \cdot A_2 + F_2 \cdot AB_1 + F_3 \cdot B_2)_{iL} & \text{on } B_S+B_f \\ qA \sum_{L=1}^{NL} (G_1 \cdot A_3 + G_2 \cdot AB_2 + G_3 \cdot AB_3 + G_4 \cdot B_3)_{iL} & \text{on } B_f \end{bmatrix} \quad (4.6)$$

One may now use Equations (4.5) and (4.6) to solve the

matrix equation

$$AP = B$$

for the set of fictitious forces P.

4.2 General Flowchart of Force Method

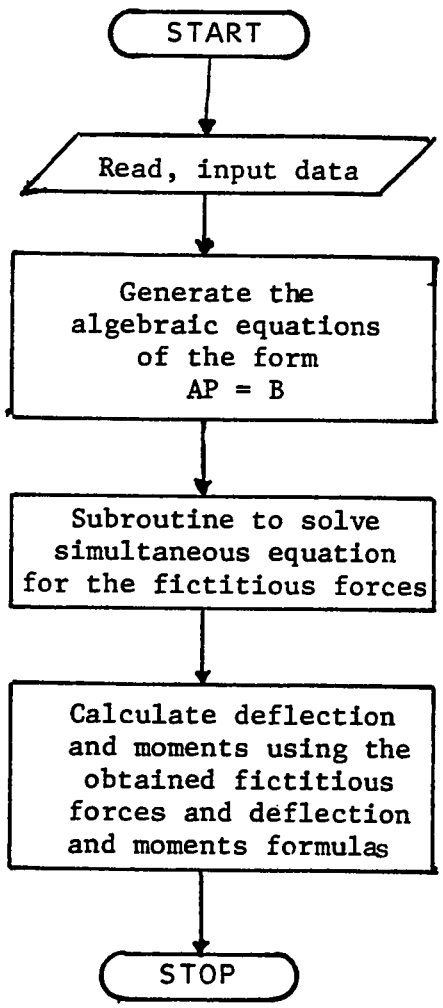

A = matrix (2Nx2N)
B = load vector (2Nx1)
P = fictitious forces

General Flowchart for the Point Force Method

FORCE METHOD FLOW-CHART

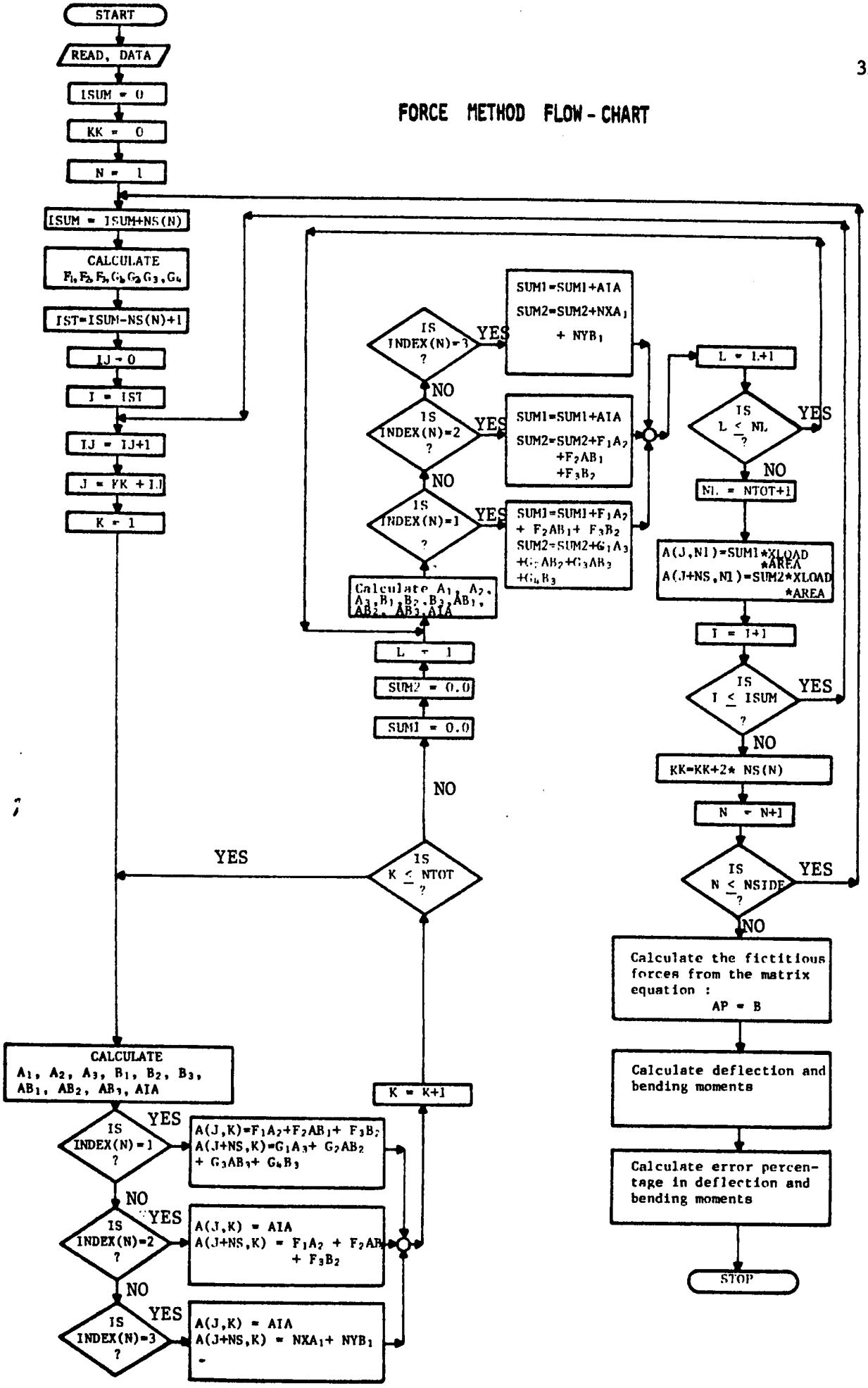

Input Data and Their Meanings

NSIDE = Number of plate sides (edges)

$X_1(I)$ = the x-coordinate of the left end of edge I

$Y_1(I)$ = the y-coordinate of the left end of edge I

$X_2(I)$ = the x-coordinate of the right end of edge I

$Y_2(I)$ = the y-coordinate of the right end of edge I

NS(I) = Number of collecation points on side I

INDEX (I) = indicate type of edge

INDEX (I) = 1 (free edge)

INDEX (I) = 2 (simply supported edge)

INDEX (I) = 3 (clamped edge)

NC = Number of contours to which the fictitious forces or fictitious moment placed around

NL = Number of loaded areas

Area = Area of discretized element

XLOAD = the intensile of the load

XL (L) = the centroidal x-coordinate of area L

YL(L) = the centroidal y-coordinate of area L

D = flexural rigidity

ν = Poisson's ratio

RAD = the arbitrary radius a

PIE = π

NDP = Number of field points

XD(J) = the x-coordinate of field point J

YD(J) = the y-coordinate of field point J

WT(J) = the theoretical deflection of field point J

XMT(J) = " " M_x " " " "

YMT(J) = " " M_y " " " "

XB(I) = the x-coordinate of collocation point I

YB(I) = the y-coordinate of collocation point I

XP(K) = the x-coordinate of the fictitious force k or the fictitious moment k

YP(K) = the y-coordinate of the fictitious force k or the fictitious moment k

N = Number of collocation points

NTOT = 2N = Number of the fictitious forces

4.3 Application of Wu-Altiero Method

Using the previous flowchart, a program can be written to solve for any plate problem of irregular shape when subjected to a uniformly distributed load with a variety of boundary conditions, provided that the plate boundaries may be approximated by straight edges. By a very slight modification in the previous flowchart, the program may solve for a plate of irregular shape subjected to any type of loading. In the work contained herein, results of two cases are to be presented (a) a square plate subjected to a uniformly distributed load and (b) a triangular plate subjected to a uniformly distributed load. There are also two cases that

Wu-Altiero have considered in their work.

Case 1

A square plate of size 10 x 10 m and acted upon by a uniformly load $q = 1N/m^2$

$E = 2.068 \times 10^5$ Mpa

$\nu = .3$

$h = .01$ m

all other information are shown in the Figure 10

Case 2

An equilateral triangular plate subjected to uniformly load $q = 1N/m^2$. All edges are simply supported as in Figure 11

$E = 2.068 \times 10^5$ Mpa

$\nu = .3$

$h = .01$ m

The results of deflection and moments (M_x and M_y) are shown in separate tables for the two cases. Also shown in these tables is the percentage of error as compared to the theoretical solution.

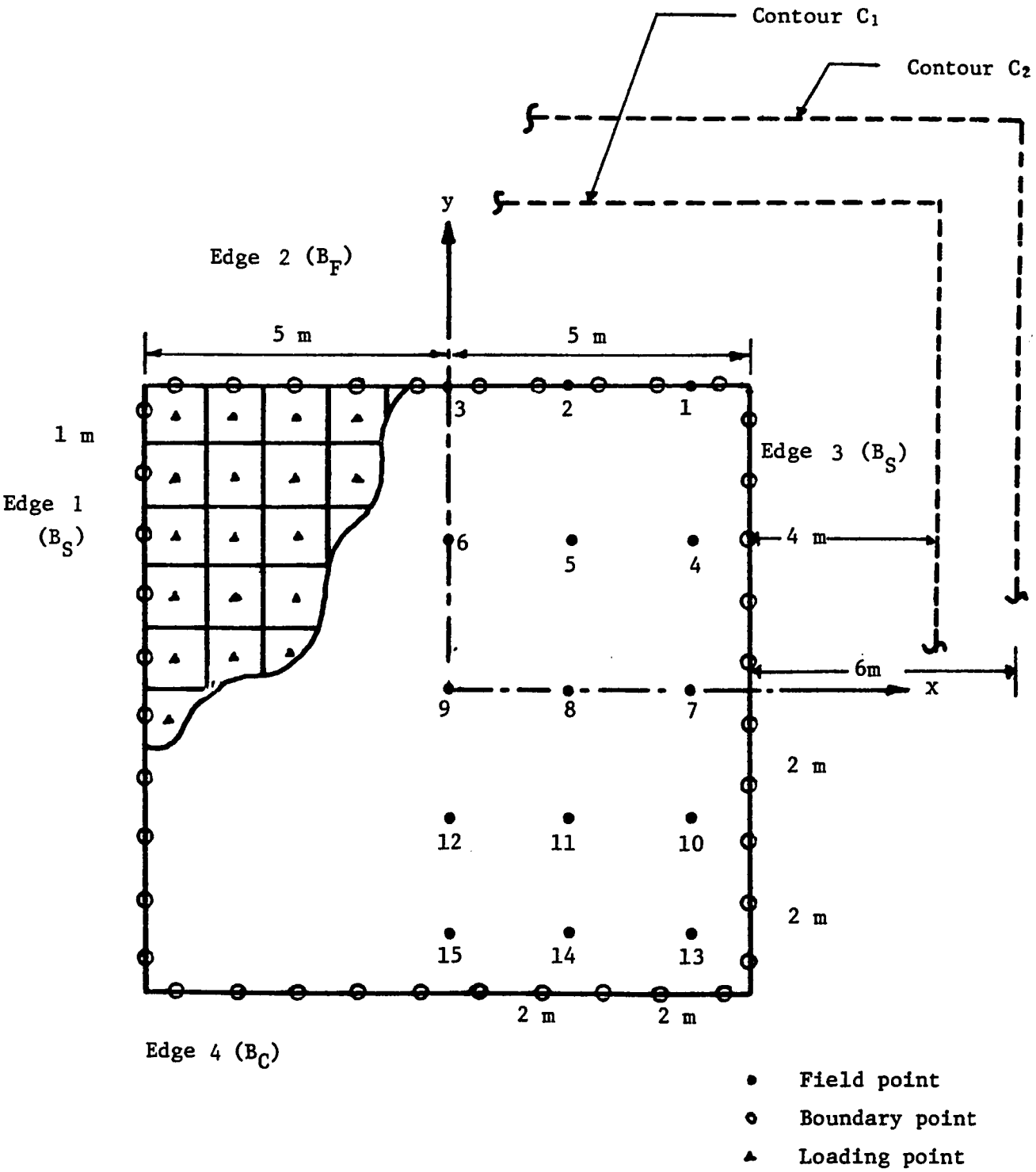

Figure 10 : Square Plate 10 m. * 10 m. with Parallel Contours C_1 and C_2.

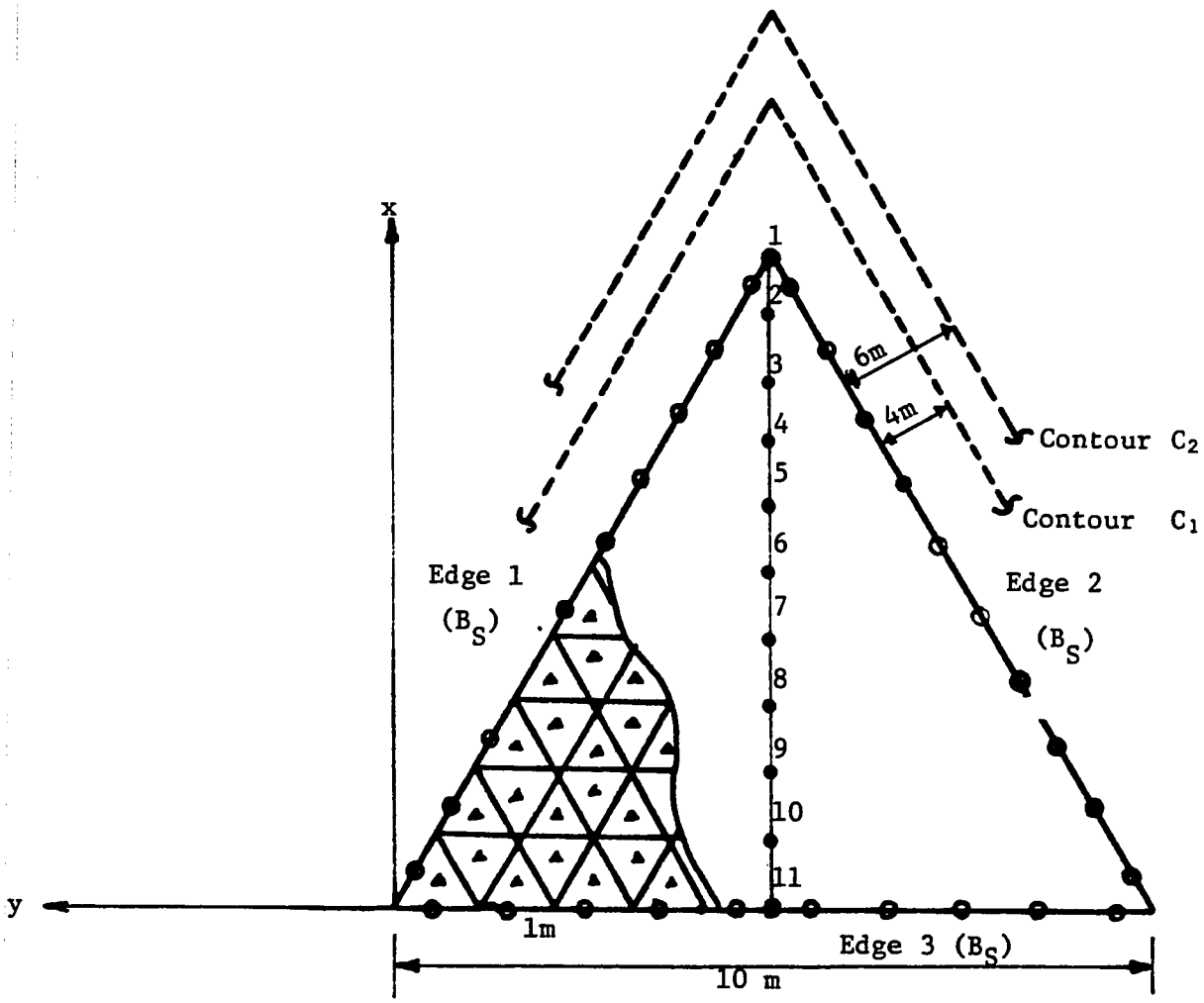

Triangular Plate

- ● Field point
- ○ Boundary point
- ▲ Loading point

Figure 11 : Triangular Plate with Parallel Contours C_1 and C_2.

Table 4.1 : The force method

Square Plate
a = 80 m, n = 40, DP

Point No.	W(exact) mm	W(Num.) mm	Error %	MX(Exact) N-mm	MX(Num.) N-mm	Error %	MY(Exact) N-mm	MY(Num.) N-mm	Error %
1	1.856	1.932	-4.087	3.687	3.843	-4.231	0.000	-0.011	0.000
2	4.790	4.981	-3.991	8.266	8.516	-3.029	0.000	0.006	0.000
3	5.881	6.113	-3.945	9.760	9.934	-2.294	0.000	0.008	0.000
4	1.405	1.453	-3.389	3.142	3.178	-1.157	1.020	1.039	-1.885
5	3.618	3.740	-3.364	6.933	7.045	-1.618	2.289	2.307	-0.798
6	4.438	4.586	-3.345	8.096	8.232	-1.680	2.692	2.710	-0.683
7	0.949	0.976	-2.791	2.360	2.374	-0.590	1.068	1.034	3.150
8	2.426	2.494	-2.788	4.912	4.958	-0.933	2.387	2.344	1.824
9	2.966	3.048	-2.778	5.618	5.675	-1.020	2.794	2.747	1.684
10	0.504	0.517	-2.513	1.332	1.323	0.714	0.378	0.338	10.593
11	1.271	1.302	-2.457	2.364	2.359	0.211	0.555	0.493	11.258
12	1.545	1.583	-2.435	2.560	2.558	0.065	0.519	0.447	13.835
13	0.087	0.089	-2.516	-0.247	-0.289	-17.078	-1.772	-1.837	-3.646
14	0.211	0.216	-2.389	-1.084	-1.135	-4.711	-4.802	-4.916	-2.367
15	0.254	0.259	-2.074	-1.416	-1.468	-3.659	-5.927	-6.055	-2.160

a = The arbitrary radius
n = Number of collocation points
DP= Double precision

Table 4.2 : The force method

Triangular Plate
a = 80, n = 30, DP

Point No.	W(exact) mm	W(Num.) mm	Error %	MX(Exact) N-mm	MX(Num.) N-mm	Error %	MY(Exact) N-mm	MY(Num.) N-mm	Error %
1	0.000	-0.000	0.000	0.000	0.004	0.000	0.000	0.012	0.000
2	0.005	0.005	-3.957	-0.392	-0.409	-4.237	0.612	0.655	-7.030
3	0.034	0.034	-1.678	-0.345	-0.367	-6.290	1.125	1.124	0.107
4	0.091	0.092	-1.474	0.010	-0.004	145.002	1.526	1.567	-2.664
5	0.166	0.168	-1.353	0.540	0.523	3.150	1.800	1.795	0.302
6	0.242	0.244	-0.946	1.111	1.104	0.675	1.934	1.970	-1.877
7	0.294	0.297	-1.005	1.597	1.585	0.754	1.913	1.903	0.531
8	0.302	0.306	-1.152	1.860	1.855	0.264	1.732	1.755	-1.332
9	0.253	0.256	-1.199	1.770	1.762	0.467	1.350	1.336	1.038
10	0.147	0.148	-0.870	1.194	1.193	0.121	0.781	0.809	-3.531
11	0.000	-0.000	0.000	0.000	-0.003	0.000	0.000	-0.009	0.000

chapter **5**

MOMENT METHOD

5.1 Moment Influence Function

In section 3.2 we have the force influence function as

$$I(x,y,\xi,n) = \frac{r^2}{16\pi D} \ln \frac{r^2}{a^2}$$

where

$$r^2 = (x-\xi)^2 + (y-\eta)^2$$

which gives the deflection of an infinite plate at point (x,y) when the unit forced is placed at $x = \xi$, $y = \eta$ with respect to the global system (x,y) as shown in Fig. 6 Sometimes it is easier to deal with local coordinates rather than the global coordinates, especially when it comes to the expression of the moment influence function. Let us write $I(x,y,\xi,n)$ (which is originally in terms of global coordinates (x,y)) in terms of the local coordinates (σ, x)

$$I^F(\sigma,\chi,s,n) = \frac{r^2}{16\pi D} \ln \frac{r^2}{a^2} \tag{5.1}$$

where

$$r^2 = (\sigma-s)^2 + (\chi-n)^2$$

Equation (5.1) gives the deflection of an infinite plate at point (σ,x) when unit load is placed at ($\sigma = s$, $x = n$) as shown in Fig. 12.

influence function is in terms of local coordinates (σ, k_i) and since the boundary conditions are in terms of global coordinates (x,y), one needs to reduce all the boundary conditions from the global coordinate system to the local coordinate system (σ, χ).

5.2 Moment Method Concept

The solution of the deflection of the real plate involves embedding the real plate into a fictitious infinite plate of the same material as shown in Fig.14. The deflection of the real plate is the superposition of two solutions as given by

(i) the deflection of an infinite plate due to the actual loading of the real plate and

(ii) the deflection created by 2N fictitious unknown moments placed outside the domain of the real plate around contours.

This yields

$$w(x,y) = \iint I(x_i, y_i, \xi, \eta)\, q_i(\xi, n)\, d\xi d\eta - \sum_{k=1}^{2N} I^M(x_i, y_i, \xi_k, \eta_k) M_k \tag{5.5}$$

The first part of Equation (5.5) can be evaluated easily after knowing the force influence function of an infinite plate. The sécond part of the right hand side of Equation (5.5), which involves the determination of the fictitious moment, can be handled by forcing the deflection equation,

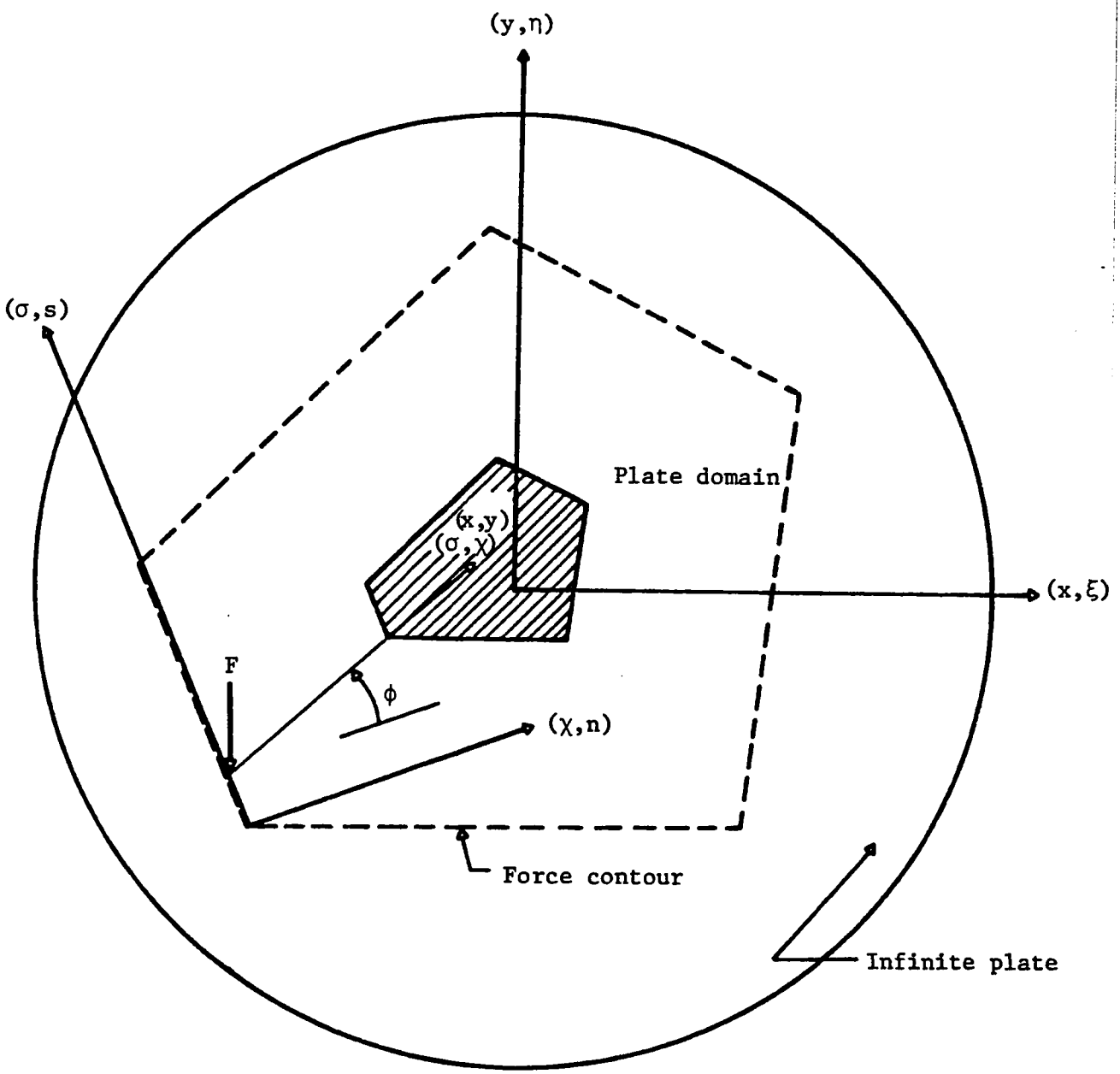

s,n = coordinates of F in local system

σ,χ = coordinates of plate domain point in local system

ξ,η = coordinates of F in global system

x,y = coordinates of plate domain point in global system

Figure 12 : Local and Global Coordinate Systems for Fictitious Force F

One can differentiate the force influence function of Equation (5.1) to get the moment influence function in terms of local coordinates as in Equation (5.2) [7].

$$I^M(\sigma, \chi, s, n) = \frac{r}{8\pi D} \ln \frac{r^2}{a^2} \cos\phi \qquad (5.2)$$

where

$$r^2 = (\sigma - s)^2 + (\chi - n)^2$$

Equation (5.2) gives the deflection of an infinite plate at point (σ, x) when a unit moment is placed at $(\sigma = s,\ x = n)$ as in Fig. 13. From Fig.13 the angle ϕ is defined as

$$\phi = \tan^{-1}\left(\frac{\sigma - s}{\chi - n}\right)$$

$$\cos\phi = \frac{x - n}{\sqrt{(\chi - n)^2 + (\sigma - s)^2}}$$

$$\cos\phi = \frac{\chi - n}{r} \qquad (5.3)$$

Using Equation (5.3) in Equation (5.2), one obtains

$$I^M(\sigma, x, s, n) = \frac{x - n}{8\pi D} \ln \frac{r^2}{a^2} \qquad (5.4)$$

Expression (5.4) is the moment influence function that is used instead of the force influence function as used by Wu-Altiero used. The only difference is that the moment

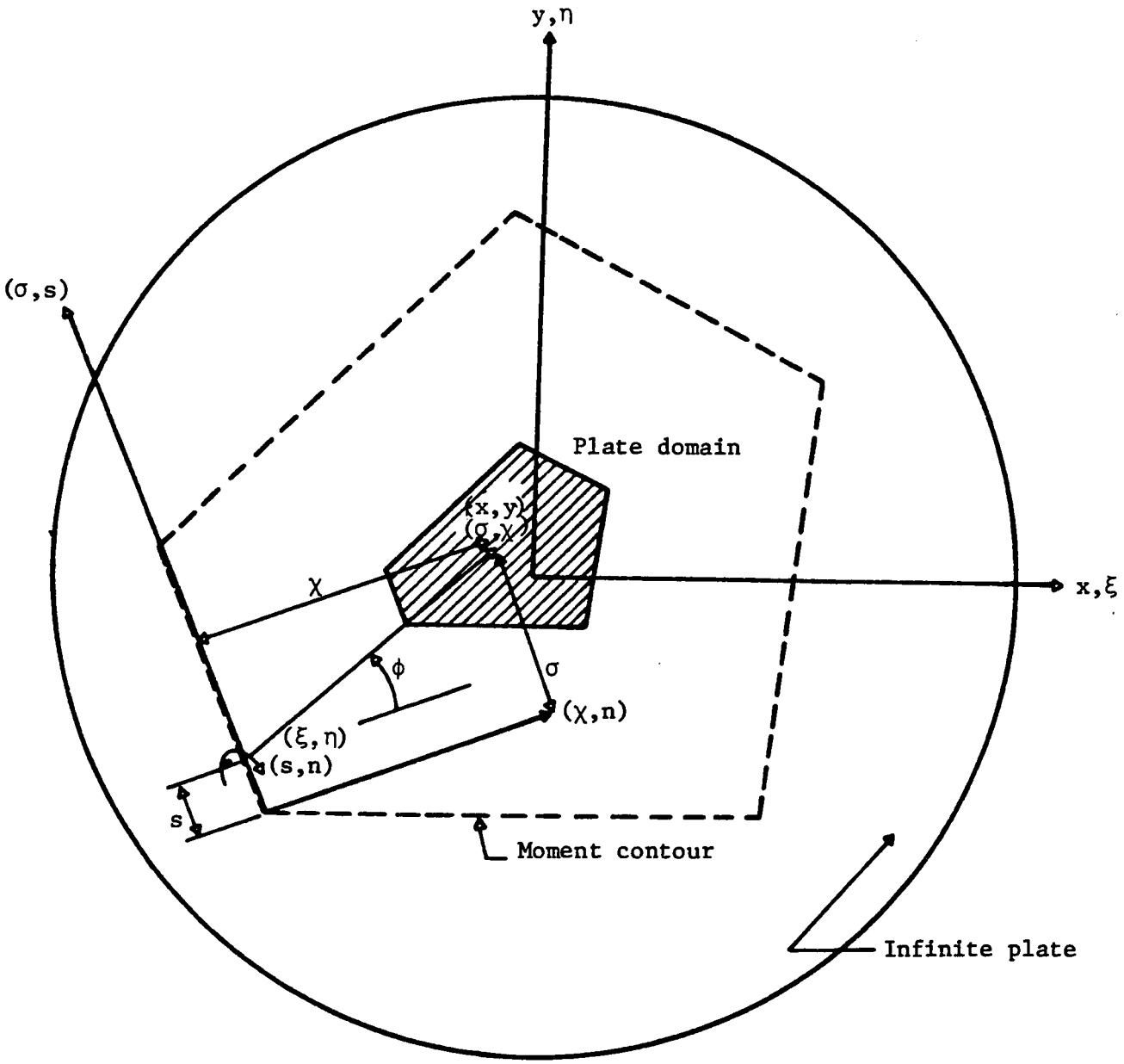

Figure 13 : Local and Global Coordinate Systems for Fictitious Moment M

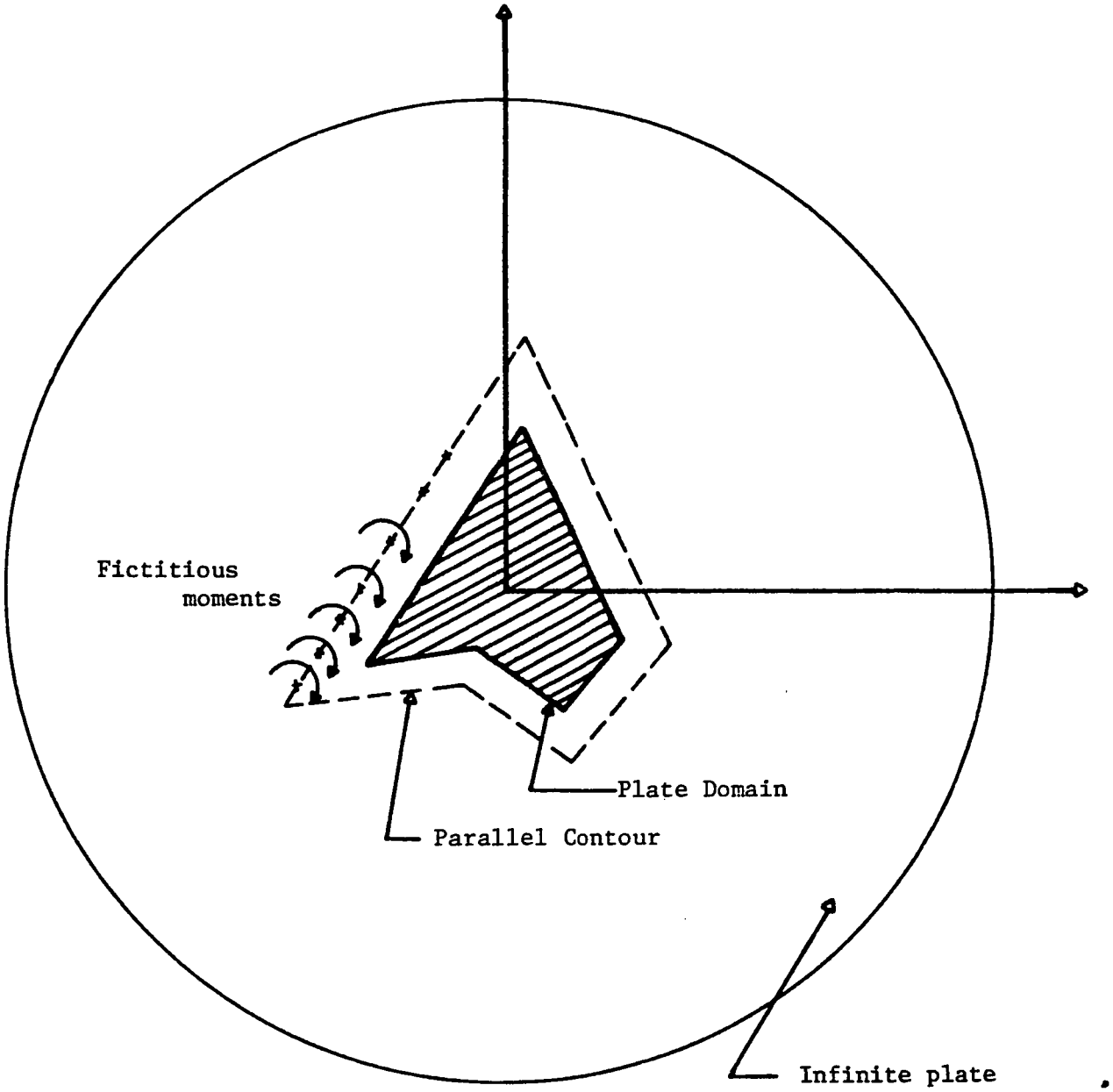

Figure 14 : Plate with Parallel Contour
(Point Moment Method)

Equation (5.5) to find the deflection any where inside the actual plate. The bending moments may also be found any where inside the real plate by using Equation (5.5) in the formulae for the bending moments.

After forcing Equation (5.5) to satisfy all the boundary conditions, one will have a matrix equation of the form

$$AM = B$$

where

M is the unknown moment vector $M^T = [M_1, M_2 \ldots M_{2N}]$

A is a matrix of size 2N x 2N

$$A = \begin{bmatrix} \sum_{k=1}^{2N} I_{ik}^{M} & \text{on } B_C+B_S \\ \sum_{k=1}^{2N} \left(n_x\left(\frac{\partial I^M}{\partial x}\right)_{ik} + n_y\left(\frac{\partial I^M}{\partial y}\right)_{ik}\right) & \text{on } B_C \\ \sum_{k=1}^{2N} \left(f_1\left(\frac{\partial^2 I^M}{\partial x^2}\right)_{ik} + f_2\left(\frac{\partial I^{2M}}{\partial x \partial y}\right)_{ik} + f_3\left(\frac{\partial^2 I^M}{\partial y^2}\right)_{ik}\right) & \text{on } B_S+B_f \\ \sum_{k=1}^{2N} \left[g_1\left(\frac{\partial^3 I}{\partial x^3}\right)_{ik} + g_2\left(\frac{\partial^3 I^M}{\partial x^2 \partial y}\right)_{ik} + g_3\left(\frac{\partial^3 I^M}{\partial x \partial y^2}\right)_{ik} + g_4\left(\frac{\partial^3 I^M}{\partial y^3}\right)_{ik}\right] & \text{on } B_f \end{bmatrix}$$

B is the right hand side or the load vector as given by

$$B = \begin{bmatrix} \iint_R I_i \, q d\xi d\eta & \text{on } B_C+B_S \\ \iint_R [n_x(\frac{\partial I}{\partial x})_i + n_y(\frac{\partial I}{\partial y})_i] q d\xi d\eta & \text{on } B_C \\ \iint_R [f_1(\frac{\partial^2 I}{\partial x^2}) + f_2(\frac{\partial^2 I}{\partial x \partial y})_i + f_3(\frac{\partial^2 I}{\partial y^2})_i] q d\xi d\eta & \text{on } B_S+B_f \\ \iint_R [g_1(\frac{\partial^3 I}{\partial x^3})_i + g_2(\frac{\partial^3 I}{\partial x^2 \partial y})_i + g_3(\frac{\partial^3 I}{\partial x \partial y^2})_i & \\ \quad + g_4(\frac{\partial^3 I}{\partial y^3})_i] q d\xi d\eta & \text{on } B_f \end{bmatrix}$$

Matrix A and vector B contain all the possible boundary conditions. Depending on the type of boundary of plate, one will choose the corresponding part of matrix A and vector B, as explained earlier in Chapter 3. Thus by solving matrix A with its load vector B, which is a system of 2N x 2N linear algebric equations, one obtains the unknown fictitious moments. The question now remains as to how to generate Matrix A and vector B. Both matrix A and vector B are in terms of global coordinates (x,y), but the moment influence function is in terms of local coordinates (σ,x). Thus one needs to express all $I^M(x,y)$ and its derivatives in terms of $I^M(\sigma,x)$ and its derivatives. In other words, the global moment influence function and its derivatives of matrix A and vector B must be expressed in terms of the local coordinates moment influence

function and its derivatives. These details are shown in Appendix C. Thus, by using Appendix C, one can generate matrix A and vector B that will solve for all the unknown moments. After that, one may use Equation (5.5) to find the deflection any where inside the real plate, and in conjunction with bending moments formulae, one can also obtain M_x and M_y any where inside the real plate.

chapter **6**

APPLICATION OF MOMENT METHOD

As mentioned in Chapter 5, in order to find the magnitudes of the fictitious moments, one needs to generate matrix A and the load vector B and that is achieved by using Appendix B which involves all the necessary derivatives. The boundary conditions are expressed in terms of the global coordinates (x,y), but the moment influence function is in terms of local coordinates (σ,χ). Thus one is forced to express the global moment influence function and its derivatives in terms of the local moment influence function and its derivatives. This is shown in the second part of Appendix B. The third part of Appendix B expresses the moment influence function and its derivatives in terms of local coordinates explicitly.

The use of different symbols for the Green's function and its derivatives will assist in programming and in making the flowchart. The moment influence function for an infinite plate of arbitrary radius "a" in terms of the local coordinates is

$$I^M(\sigma,\chi,s,n) = \frac{\chi-n}{8\pi D} \ \ell n \ \frac{(\sigma-s)^2 + (\chi-n)^2}{a^2}$$

$$I^M = AAIA$$

$$\frac{\partial I^M}{\partial x} = AA_1 \qquad \frac{\partial I^M}{\partial y} = AB_1 \qquad \frac{\partial^2 I^M}{\partial x \partial y} = AAB_1$$

$$\frac{\partial^2 I^M}{\partial x^2} = AA_2 \qquad \frac{\partial^2 I^M}{\partial y^2} = AB_2 \qquad \frac{\partial^3 I^M}{\partial x^2 \partial y} = AAB_2$$

$$\frac{\partial^3 I^M}{\partial x^3} = AA_3 \qquad \frac{\partial^3 I^M}{\partial y^3} = AB_3 \qquad \frac{\partial^3 I^M}{\partial x \partial y^2} = AAB_3$$

Now one can write matrix A in section 5.2 as

$$A = \begin{bmatrix} \sum_{k=1}^{N} (AAIA)_{ik} & \text{on } B_S + B_C \\ \sum_{k=1}^{2N} [N_x(AA_1) + N_y(AB_1)]_{ik} & \text{on } B_C \\ \sum_{k=1}^{2N} [F_1(AA_2) + F_2(AAB_1) + F_3(AB_2)]_{ik} & \text{on } B_s + B_f \\ \sum_{k=1}^{2N} [G_1(AA_3) + G_2(AAB_2) + G_3(AAB_3) + G_4(AB_3)]_{ik} & \text{on } B_f \end{bmatrix} \quad (6.1)$$

If the plate is subjected to a uniformly distributed load the magnitude of load vector B remains the same as derived earlier and given by Equation (5.6). Considering the case where the loaded area is descretized to equal areas (elements), one writes using Equation (5.3) for evaluation of the load vector B,

$$B = \begin{bmatrix} qA \sum_{L=1}^{NL} (AAIA)_{iL} & \text{on } B_S+B_C \\ qA \sum_{L=1}^{NL} [N_x(AA_1) + N_y(AB_1)]_{iL} & \text{on } B_C \\ qA \sum_{L=1}^{NL} [F_1(AA_2) + F_2(AAB_1) + F_3(AB_2)]_{iL} & \text{on } B_s+B_f \\ qA \sum_{L=1}^{NL} [G_1(AA_3)+G_2(AAB_2) + G_3(AAB_3) + G_4(AB_3)]_{iL} & \text{on } B_f \end{bmatrix} \quad (6.2)$$

Using (6.1) and (6.2) one may solve the following matrix equation

$$AM = B$$

for the set of friction moments M. At this stage, one can get deflection and moments anywhere inside the plate readily.

GENERAL FLOWCHART

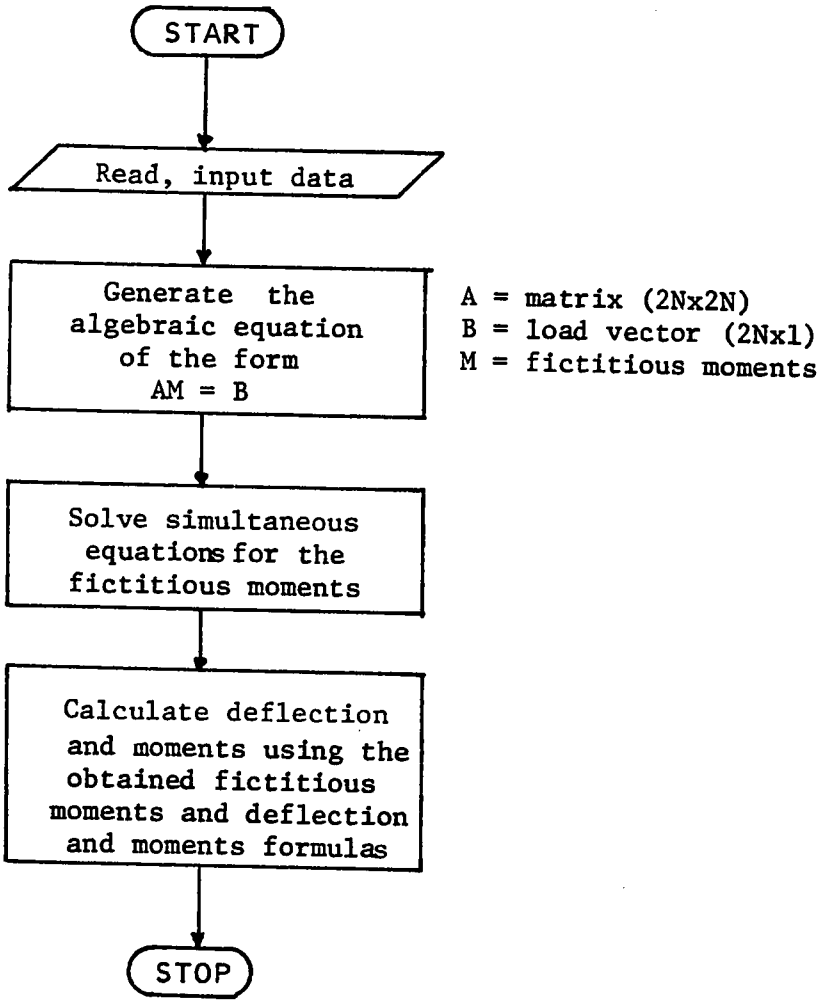

General Flowchart for the Point Moment Method

MOMENT METHOD FLOW - CHART

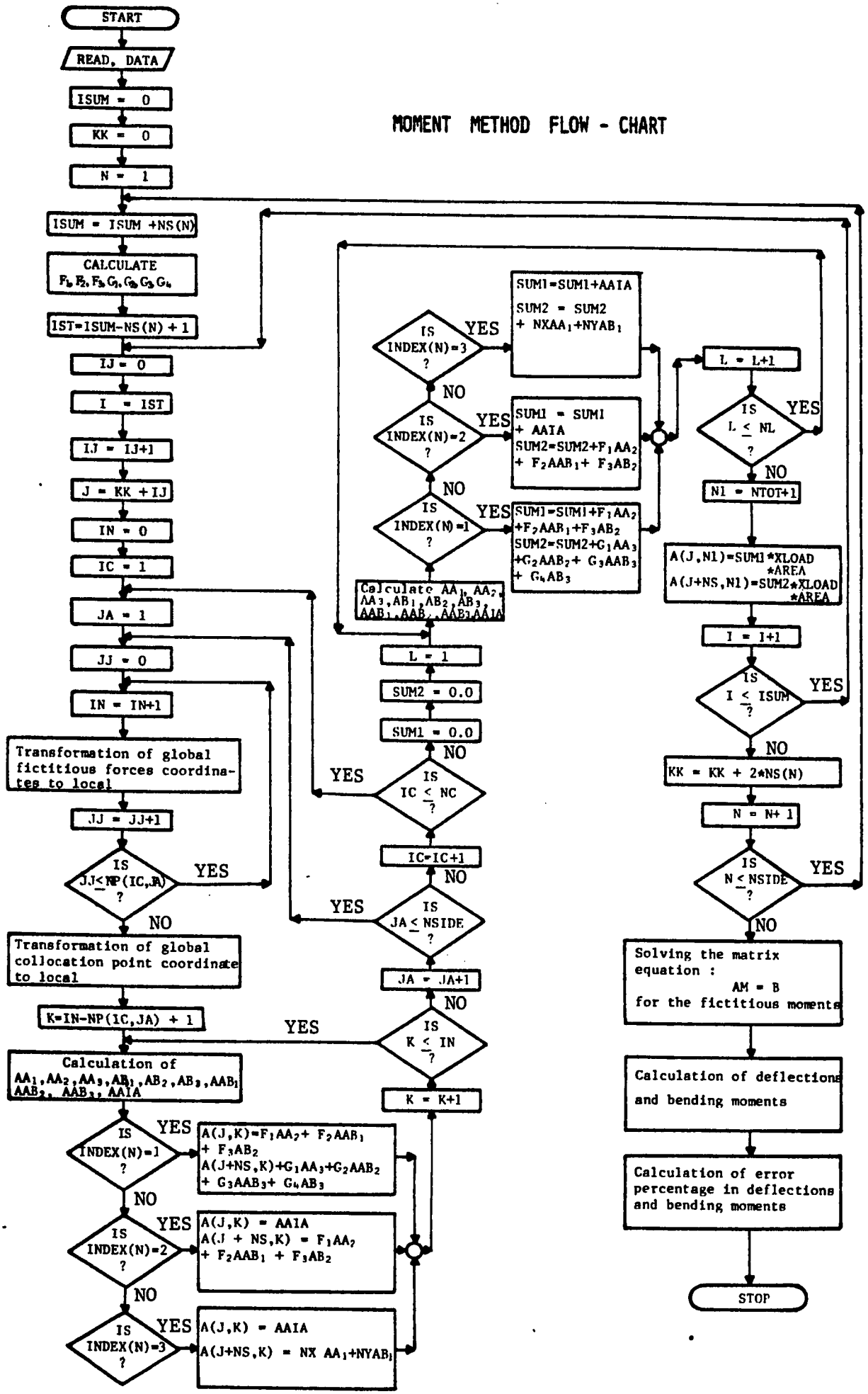

Using the previous flowchart, a program can be written to solve for any thin plate problem of irregular shape when subjected to a uniformly distributed load with a variety of boundary conditions, provided that the plate boundaries may be approximated by straight edges. By a very slight modification in the previous flowchart, a program can be written to solve for a plate of irregular shape subjected to any type of loading. In the work contained herein, results of the previous two cases in section 4.3 are presented again using the moment method. The statements of the two problems have been mentioned in section 4.3 and also shown in Figure 10 and Figure 12. Tables (6.1) and (6.2) contain the deflection and moments for the square and triangular plates,respectively.

Table 6.1 : The moment method

Square Plate
a = 80m, n = 40, DP

Point No.	W(exact) mm	W(Num.) mm	Error %	MX(Exact) N-mm	MX(Num.) N-mm	Error %	MY(Exact) N-mm	MY(Num.) N-mm	Error %
1	1.856	1.933	-4.126	3.687	3.826	-3.764	0.000	0.008	0.000
2	4.790	4.982	-4.013	8.266	8.518	-3.049	0.000	0.005	0.000
3	5.881	6.114	-3.968	9.760	9.989	-2.343	0.000	0.005	0.000
4	1.405	1.453	-3.402	3.142	3.179	-1.163	1.020	1.039	-1.834
5	3.618	3.740	-3.376	6.933	7.046	-1.627	2.290	2.307	-0.766
6	4.438	4.587	-3.357	8.096	8.233	-1.687	2.692	2.710	-0.663
7	0.949	0.976	-2.798	2.360	2.374	-0.590	1.068	1.034	3.155
8	2.426	2.494	-2.795	4.912	4.958	-0.937	2.387	2.343	1.838
9	2.966	3.049	-2.785	5.618	5.676	-1.025	2.794	2.747	1.698
10	0.504	0.517	-2.516	1.332	1.322	0.720	0.378	0.338	10.618
11	1.271	1.302	-2.461	2.364	2.359	0.210	0.555	0.492	11.302
12	1.545	1.583	-2.440	2.560	2.559	0.063	0.519	0.447	13.889
13	0.087	0.089	-2.483	-0.247	-0.290	-17.321	-1.772	-1.834	-3.710
14	0.211	0.216	-2.391	-1.084	-1.135	-4.713	-4.802	-4.916	-2.371
15	0.254	0.259	-2.077	-1.416	-1.468	-3.663	-5.927	-6.055	-2.165

Table 6.2 : The moment method

Triangular Plate
a = 80 m, n = 30, DP

Point No.	W(exact) mm	W(Num.) mm	Error %	MX(Exact) N-mm	MX(Num.) N-mm	Error %	MY(Exact) N-mm	MY(Num.) N-mm	Error %
1	0.000	-0.000	0.000	0.000	0.045	0.000	0.000	-0.007	0.000
2	0.005	0.005	-4.101	-0.392	-0.408	-3.981	0.612	0.658	-7.457
3	0.034	0.034	-1.703	-0.345	-0.367	-6.220	1.125	1.124	0.081
4	0.091	0.092	-1.480	0.010	-0.005	145.274	1.526	1.567	-2.674
5	0.166	0.168	1.356	0.540	0.523	3.152	1.800	1.795	0.298
6	0.242	0.244	-0.948	1.111	1.104	0.674	1.934	1.970	-1.878
7	0.294	0.297	-1.007	1.597	1.585	0.754	1.913	1.903	0.530
8	0.302	0.306	-1.153	1.860	1.855	0.263	1.732	1.755	-1.332
9	0.253	0.256	-1.200	1.770	1.762	0.466	1.350	1.336	1.038
10	0.147	0.148	-0.871	1.194	1.193	0.113	0.781	0.809	-3.517
11	0.000	-0.000	0.000	0.000	-0.000	0.00	0.00	-0.000	0.000

chapter **7**

MIXED MODE METHOD

In Chapters 3 and 4, where Wu-Altiero method is used, very good solution of the deflection of both rectangular and triangular plates is obtained. Also in Chapters 4 and 5, the numerical technique as developed in this work of solving the same plate with the aid of fictitious moments was verified to be very good. Knowing that the use of fictitious forces or fictitious moments gives almost identical results with a sufficient number of collocation points, the superposition of both fictitious moments as well as fictitious forces is expected to give reasonable answers and this is the topic of this chapter. The technique basically involves embedding the real plate into a fictitious infinite plate of the same material for which the Green's function for force and moment is known. N points are prescribed at the real plate boundary at which the boundary conditions for the real plate are to be satisfied by means of N fictitious moments as well as N fictitious forces placed outside the domain of the real plate. The solution of the real plate is to superimpose three cases, one being the deflection of an infinite plate due to the actual loading

and the second and the third being the deflection due to N fictitious forces and N fictitious moments, respectively, as shown in Equation (7.1) and Figure 15.

$$w(x,y) = [\iint I(x,y,\xi,\eta)\ q(\xi,\eta)d\xi d\eta - \sum_{k=1}^{N} I(x,y,\xi_k,\eta_k)L_k - \sum_{k=N+1}^{2N} I^M(x,y,\xi_k,\eta_k)L_k] \qquad (7.1)$$

where

L_k for $k = 1 \rightarrow k = N$ are the fictitious forces

and L_k for $k = N+1 \rightarrow k = 2N$ are the fictitious moments

The first part of Equation (7.1) can be evaluated easily just by knowing the force influence function of an infinite plate of the same material as the real plate. The other two parts of Equation (7.1) involve the unknown N fictitious forces and N fictitious moments, which may be obtained by forcing the total solution (Equation 7.1) to satisfy the boundary conditions of the real plate (Equation 2.11 - 2.14) resulting in a matrix equation of the form

$$AL = B$$

which may be solved for the N fictitious forces and the N fictitious moments.

where :

A is the matrix given by

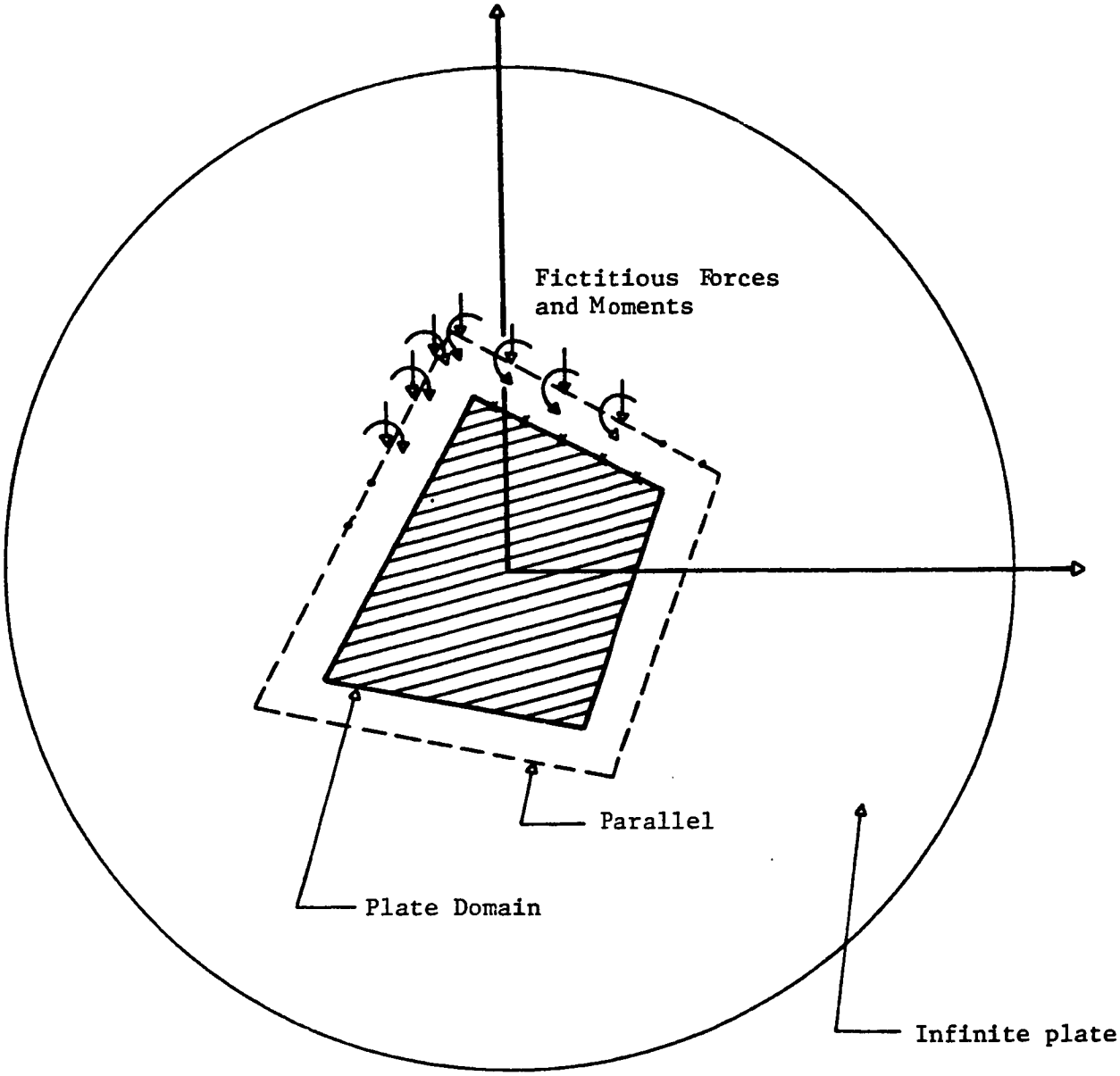

Figure 15 : Plate and Contour Geometry
(Mixed Mode Method)

$$A = \begin{bmatrix} \sum_{k=1}^{N} I_{ik} + \sum_{k=N+1}^{2N} I^M_{ik} & \text{on } B_C + B_S \\ \sum_{k=1}^{N} [n_x(\frac{\partial I}{\partial x})_{ik} + n_y(\frac{\partial I}{\partial y})_{ik}] + \sum_{k=N+1}^{2N} [n_x(\frac{\partial I^M}{\partial x})_{ik} + n_y(\frac{\partial I^M}{\partial y})_{ik}] & \text{on } BC \\ \sum_{k=1}^{N} [f_1(\frac{\partial^2 I}{\partial x^2})_{ik} + f_2(\frac{\partial^2 I}{\partial x \partial y})_{ik} + f_3(\frac{\partial^3 I}{\partial y^2})_{ik}] + \sum_{k=N+1}^{2N} [f_1(\frac{\partial^2 I^M}{\partial x^2})_{ik} + f_2(\frac{\partial^2 I^M}{\partial x \partial y})_{ik} + f_3(\frac{\partial^2 I^M}{\partial y^2})_{ik}] & \text{on } B_S + B_f \\ \sum_{k=1}^{N} [g_1(\frac{\partial^3 I}{\partial x^3})_{ik} + g_2(\frac{\partial^3 I}{\partial x^2 \partial y}) + g_3(\frac{\partial^3 I}{\partial x \partial y^2})_{ik} + g_4(\frac{\partial^3 I}{\partial y^3})_{ik}] + \sum_{k=N+1}^{2N} [g_1(\frac{\partial^3 I^M}{\partial x^3})_{ik} + g_2(\frac{\partial^3 I^M}{\partial x^2 \partial y}) + g_3(\frac{\partial^3 I^M}{\partial x \partial y^2})_{ik} + g_4(\frac{\partial^3 I^M}{\partial y^3})] & \text{on } B_f \end{bmatrix}$$

$$L^T = \{L_1, L_2, L_3 \ldots L_N, L_{N+1}, L_{N+2} \ldots L_{2N}\}$$

where

$L_1 \rightarrow L_N$ are the N fictitious forces

and $L_{N+1} \rightarrow L_{2N}$ are the N fictitious moments

The load vector B is given as

$$B = \begin{bmatrix} \iint_R I_i \; q d\xi d\eta & \text{on } B_C + B_S \\ \iint_R n_x \left(\frac{\partial I}{\partial x}\right)_i + n_y \left(\frac{\partial I}{\partial y}\right)_i \; q d\xi d\eta & \text{on } B_C \\ \iint_R \left[f_1 \left(\frac{\partial^2 I}{\partial x^2}\right)_i + f_2 \left(\frac{\partial^2 I}{\partial x \partial y}\right)_i + f_3 \left(\frac{\partial^2 I}{\partial y^2}\right)_i\right] q d\xi d\eta & \text{on } B_S + B_f \\ \iint_R \left[g_1 \left(\frac{\partial^3 I}{\partial x^3}\right)_i + g_2 \left(\frac{\partial^3 I}{\partial x^2 \partial y}\right)_i + g_4 \left(\frac{\partial^3 I}{\partial x \partial y^2}\right)_i \right. & \\ \qquad \left. + g_4 \left(\frac{\partial^3 I}{\partial y^3}\right)_i\right] q d\xi d\eta & \text{on } B_f \end{bmatrix}$$

For the same plate when subjected to the same load the right hand side vector is the same for all the three methods.

Depending on the type of plate boundaries, one may use the corresponding part of matrix A and the corresponding part of vector B. For generating matrix A one needs to refer to Appendix A to use the derivatives of the force influence function, and refer to Appendix C to use the derivatives of the moment influence function. However, for generating vector B, only Appendix A is needed. By generating matrix A and vector B one obtains 2N algaibric equations that may be solved for both the N forces and the N moments. Deflection any where inside the plate can be found using Equation (7.1). Also, Equation (7.1) can be used in conjunction with the bending moments formulae to yield the bending moment anywhere inside the plate.

With the aid of the force and moment flowchart, one can get the mixed mode flowchart from which a program may be written. Tables (7.1) and (7.2) contain the deflections and moments for both the square and triangular plates using the mixed mode method. The statements of the two problems have been mentioned in section 4.3 as shown in Figures 10 and 11.

Table 7.1 : The mixed mode method

Square Plate

a = 80m, n = 40, DP

Point No.	W(exact) mm	W(Num.) mm	Error %	MX(Exact) N-mm	MX(Num.) N-mm	Error %	MY(Exact) N-mm	MY(Num.) N-mm	Error %
1	1.856	1.931	-4.038	3.687	3.818	-3.557	0.000	-0.001	0.000
2	4.790	4.980	-3.966	8.266	8.510	-2.953	0.000	0.009	0.000
3	5.881	6.112	-3.927	9.760	9.981	-2.266	0.000	0.009	0.000
4	1.405	1.452	-3.373	3.142	3.178	-1.140	1.020	1.040	-1.937
5	3.618	3.740	-3.348	6.933	7.044	-1.606	2.289	2.308	-0.821
6	4.438	4.586	-3.329	8.096	8.231	-1.670	2.692	2.711	-0.698
7	0.949	0.975	-2.782	2.360	2.374	-0.593	1.068	1.034	3.154
8	2.426	2.493	-2.779	4.912	4.958	-0.927	2.387	2.344	1.810
9	2.966	3.048	-2.768	5.618	5.675	-1.014	2.794	2.747	1.671
10	0.504	0.517	-2.508	1.332	1.323	0.691	0.378	0.338	10.610
11	1.271	1.302	-2.450	2.364	2.359	0.315	0.555	0.493	11.201
12	1.545	1.583	-2.429	2.560	2.558	0.070	0.519	0.448	13.767
13	0.087	0.089	-2.546	-0.247	-0.288	-16.823	-1.772	-1.835	-3.527
14	0.211	0.216	-2.383	-1.084	-1.136	-4.780	-4.802	-4.915	-2.350
15	0.254	0.259	-2.067	-1.416	-1.468	-3.7011	-5.927	-6.054	-2.146

Table 7.2 : The mixed mode method

Triangular Plate

a = 80m, n = 30, DP

Point No.	W(exact) mm	W(Num.) mm	Error %	MX(Exact) N-mm	MX(Num.) N-mm	Error %	MY(Exact) N-mm	MY(Num.) N-mm	Error %
1	0.000	-0.000	0.000	0.000	0.038	0.000	0.000	0.005	0.000
2	0.005	0.005	-4.245	-0.392	-0.4066	-3.712	0.612	0.656	-7.261
3	0.034	0.034	-1.697	-0.345	-0.367	-6.327	1.125	1.124	0.070
4	0.091	0.092	-1.478	0.010	-0.004	145.161	1.526	1.567	-2.670
5	0.166	0.168	-1.355	0.540	0.523	3.150	1.800	1.795	0.300
6	0.242	0.244	-0.947	1.111	1.104	0.675	1.934	1.970	-1.878
7	0.294	0.297	-1.006	1.597	1.585	0.754	1.913	1.903	0.530
8	0.302	0.306	-1.153	1.860	1.855	0.263	1.732	1.755	-1.332
9	0.253	0.256	-1.200	1.770	1.762	0.466	1.350	1.336	1.038
10	0.147	0.148	-0.871	1.194	1.193	0.120	0.781	0.809	-3.531
11	0.000	-0.000	0.000	0.000	-0.003	0.000	0.000	-0.009	0.000

chapter **8**

DISCUSSION AND CONCLUSIONS

The work described here-to-fore confirms the validity of the point force method as described by Wu-Altiero [6], in addition to the point moment and the mixed model methods as developed herein.

The salient features of the three methods may be summarized as :

(1) The technique of influence function usage in the solution of the plate problem is based on the use of the Green's functions of an infinite plate with an arbitrary radius "a". These functions may be force or moment influence functions. From the numerous results obtained and shown in Tables 8.3 through 8.8, it is clear that the magnitude of the arbitrary radius "a" has no influence on the computed values of deflection and moments in the plate, provided that double precision computational mode is used. This is in contrast to the conclusions drawn by Wu-Altiero in [6] where the validity of the approach is restricted to a certain range of the arbitrary radius "a" for example, in the case of a square plate 10 m x 10 m, "a" is

restricted to 80 m < a < 8000 m for non-oscillatory results. This is a rather significant conclusion, inasmuch as it appears to relieve the user of this technique the responsibility of guessing an appropriate value of "a" for any given problem.

(2) Another important conclusion of this work is the effect of the use of the double precision computational mode in programming. This may have been necessitated due to the fact that the technique requires inversion of a large sized matrix, which is not handed and nor is symmetric. The program associated with each of the three methods is run twice, one using a single precision computational mode and the other double precision. It is clear from Tables 8.3 through 8.8 that single precision programming leads to results which are somewhat erroneous, whereas the double precision mode leads to accurate and stable results.

(3) In addition to deciding a value for the arbitrary radius "a" prior to the usage of this program for a given problem, the user must also decide the location of contour(s) outside the domain of the plate. It appears that the number of contours should preferably be greater than one for reasons of stability of numerical results over a greater range of contour location. The case of the use of two contours for the square plate

(10 m x 10 m.) was studied in this work, where the location of one contour (C_1) was fixed and a range obtained for the other parallel contour (C_2). The results of this study are depicted in Figure 18, where the range of C_2 is plotted as the ordinate and different fixed values of C_1 plotted as the abscisa. The bell shaped curve is interesting inasmuch as it shows that the range of C_2 is restricted when C_1 is taken "very close" or "quite far" from the plate edge. This interaction may be explained on the behavior of the influence function for small and large values of its arrangement for forces on contour C_1 requiring a numerical balancing effect from forces located on C_2. Such an argument may be extended to the preferred use of contours numbering greater than one.

(4) The rate of convergence for the three methods as a function of the number of collocation points has been investigated, using the following three error criteria :

$$I_1 = |w_{theo.} - w_{num.}|_{max}$$

$$I_2 = \sum_{i=1}^{N} (w_{theo.} - w_{num.})_i^2/N-1$$

and

$$I_3 = \sum_{i=1}^{N} |(w_{theo.} - w_{num.})_i|/N$$

as shown in Figure 17.

Also the first error criteria for mix bending as a function of the number of collocation points has been investigated for the three methods as shown in Figure 19.

(5) Philosophically speaking, the method is a general technique for the solution of linear boundary value problems. The contour point forces or moments may be thought of as the "homogeneous" part of the solution of the differential equation, chosing such that the complete solution satisfies boundary conditions in a discrete sense. Thus this method may be extended to the analysis of other problems in mechanics or other engineering systems which are modelled as boundary value problems, provided the influence function is available for the basic governing equation. It may also have use in non-linear problems, where the technique would be used in an iterative sense.

Table 8.1 Three Methods Deflections

Square Plate

n = 40 DP a = 80 m

Point No.	W(Exact)mm	W(Num)mm Wu-Altiero method	W(Num)mm Moment Method	W(Num)mm Mixed Mode Method
1	1.8560	1.9319	1.9326	1.9309
2	4.7900	4.9812	4.9822	4.9800
3	5.8810	6.1132	6.1144	6.1119
4	1.4050	1.4526	1.4528	1.4524
5	3.6180	3.7397	3.7402	3.7391
6	4.4380	4.5864	4.5870	4.5858
7	0.9490	0.9755	0.9755	0.9754
8	2.4260	2.4936	2.4938	2.4934
9	2.9660	3.0484	3.0486	3.0481
10	0.5040	0.5167	0.5167	0.5166
11	1.2710	1.3022	1.3023	1.3021
12	1.5450	1.5826	1.5827	1.5825
13	0.0870	0.0892	0.0892	0.0892
14	0.2110	0.2160	0.2160	0.2160
15	0.2540	0.2593	0.2593	0.2593

Table 8.2 Three Methods Deflections

Triangular Plate

n = 30, DP a = 80

Point No.	W(Exact)mm	W(Num)mm Wu-Altiero method	W(Num)mm Moment Method	W(Num)mm Mixed Mode Method
1	0.0000	-0.0001	-0.0002	-0.0002
2	0.0052	0.0054	0.0054	0.0054
3	0.0337	0.0343	0.0343	0.0343
4	0.0906	0.0919	0.0919	0.0919
5	0.1660	0.1682	0.1683	0.1682
6	0.2420	0.2443	0.2443	0.12443
7	0.2940	0.2970	0.2970	0.2970
8	0.3020	0.3055	0.3055	0.3055
9	0.2530	0.2560	0.2560	0.2560
10	0.1470	0.1483	0.1483	0.1483
11	0.0000	-0.0000	-0.0000	-0.0000

Table 8.3 : Deflections using the force method

Triangular Plate
n = 30, SP

Point No.	W (exact)mm \ radius "a"m	.4	200	1800	3000	7200	14000	1,000,000	10,000,000
1	0.0000	- 0.0070	1.6576	0.0087	0.0247	0.0043	-0.1667	0.0106	0.2671
2	0.0052	- 0.0046	1.3869	0.0129	0.0252	0.0111	-0.0628	0.0149	0.0704
3	0.0337	0.0210	1.2589	0.0488	0.0512	0.0389	0.0712	0.0217	0.3096
4	0.0906	0.0838	1.5605	0.1103	0.1089	0.0950	0.2407	0.0964	0.3254
5	0.1660	0.1603	0.3972	0.1769	0.1838	0.1690	0.2272	0.1628	0.3141
6	0.2420	0.2345	-0.8402	0.2561	0.2562	0.2465	0.3073	0.2550	0.2166
7	0.2940	0.2882	-0.6950	0.2988	0.3101	0.2972	0.3508	0.2936	0.1316
8	0.3020	0.2947	-1.0594	0.3031	0.3188	0.3049	0.2966	0.3108	0.4864
9	0.2530	0.2473	-1.1156	0.2556	0.2686	0.2561	0.2454	0.2604	0.2218
10	0.1470	0.1363	-0.9183	0.1508	0.1587	0.1484	0.2036	0.1575	0.2293
11	0.0000	-0.0100	-1.3932	0.0069	0.0083	0.0010	0.1151	0.0021	0.0561

n = Number of collocation points

SP = Single precision

DP = Double precision

Table 8.4 : Deflections using the force method

Triangular Plate
n = 30, DP

Point No.	W (exact) mm \ radius "a" m	.4	200	1800	3000	7200	14000	1,000,000	10,000,000
1	0.0000	-0.0001	-0.0001	-0.0001	-0.0001	-0.0001	-0.0001	-0.0001	-0.0001
2	0.0052	0.0054	0.0054	0.0054	0.0054	0.0054	0.0054	0.0054	0.0054
3	0.0337	0.0343	0.0343	0.0343	0.0343	0.0343	0.0343	0.0343	0.0343
4	0.0906	0.0919	0.0919	0.0919	0.0919	0.0919	0.0919	0.0919	0.0919
5	0.1660	0.1682	0.1682	0.1682	0.1682	0.1682	0.1682	0.1682	0.1682
6	0.2420	0.2443	0.2443	0.2443	0.2443	0.2443	0.2443	0.2443	0.2443
7	0.2940	0.2970	0.2970	0.2970	0.2970	0.2970	0.2970	0.2970	0.2970
8	0.3020	0.3055	0.3055	0.3055	0.3055	0.3055	0.3055	0.3055	0.3055
9	0.2530	0.2560	0.2560	0.2560	0.2560	0.2560	0.2560	0.2560	0.2560
10	0.1470	0.1483	0.1483	0.1483	0.1483	0.1483	0.1483	0.1483	0.1483
11	0.0000	-0.0000	-0.0000	-0.0000	-0.0000	-0.0000	-0.0000	-0.0000	-0.0000

76

Triangular Plate
n = 30, SP

Table 8.5 : Deflections using the moment method

Point No.	W (exact) mm \ radius "a" m	.4	200	1800	3000	7200	14000	1,000,000	10,000,000
1	0.0000	-0.0000	-0.0057	-0.0161	-0.0280	0.0254	-0.0034	0.0201	0.0382
2	0.0052	0.0054	-0.0011	-0.0128	0.0206	0.0254	-0.0040	0.0189	-0.0364
3	0.0337	0.0341	0.0279	0.0202	0.0458	0.0529	0.0249	0.0307	-0.0261
4	0.0906	0.0911	0.0864	0.0798	0.1031	0.1103	0.0819	0.0966	0.0202
5	0.1660	0.1670	0.1630	0.1553	0.1801	0.1813	0.1688	0.1676	0.1463
6	0.2420	0.2422	0.2396	0.2334	0.2575	0.2536	0.2487	0.2435	0.1861
7	0.2940	0.2944	0.2929	0.2878	0.3104	0.3066	0.2984	0.3005	0.2079
8	0.3020	0.3021	0.3003	0.2962	0.3146	0.3135	0.3141	0.3080	0.2718
9	0.2530	0.2532	0.2531	0.2512	0.2593	0.2646	0.2633	0.2659	0.3095
10	0.1470	0.1442	0.1461	0.1441	0.1510	0.1506	0.1528	0.1530	0.1912
11	0.0000	-0.0042	-0.0022	-0.0063	0.0021	0.0021	0.0004	0.0005	0.0380

77

Triangular Plate
n = 30, DP

Table 8.6 : Deflections using the moment method

Point No.	W (exact)mm \ radius "a"m	.4	200	1800	3000	7200	14000	1,000,000	10,000,000
1	0.0000	-0.0005	-0.0002	-0.0001	-0.0001	-0.0000	-0.0000	0.0002	0.0003
2	0.0052	0.0054	0.0054	0.0054	0.0054	0.0054	0.0054	0.0054	0.0054
3	0.0337	0.0343	0.0343	0.0343	0.0343	0.0343	0.0343	0.0343	0.0343
4	0.0906	0.0919	0.0919	0.0919	0.0919	0.0919	0.0919	0.0919	0.0919
5	0.1660	0.1683	0.1683	0.1683	0.1683	0.1683	0.1683	0.1683	0.1683
6	0.2420	0.2443	0.2443	0.2443	0.2443	0.2443	0.2443	0.2443	0.2443
7	0.2940	0.2970	0.2970	0.2970	0.2970	0.2970	0.2970	0.2970	0.2970
8	0.3020	0.3055	0.3055	0.3055	0.3055	0.3055	0.3055	0.3055	0.3055
9	0.2530	0.2560	0.2560	0.2560	0.2560	0.2560	0.2560	0.2560	0.2560
10	0.1470	0.1483	0.1483	0.1483	0.1483	0.1483	0.1483	0.1483	0.1483
11	0.0000	-0.0000	-0.0000	-0.0000	-0.0000	-0.0000	-0.0000	-0.0000	-0.0000

Triangular Plate
n = 30, SP

Table 8.7 : Deflections using the mixed mode method

Point No.	W (exact)mm \ radius "a"m	.4	200	1800	3000	7200	14000	1,000,000	10,000,000
1	0.0000	-0.0356	-0.0087	-0.0248	0.0022	0.0025	0.0116	-0.0001	0.0024
2	0.0052	-0.0173	0.0279	0.0244	0.0053	0.0045	0.0192	0.0062	0.0060
3	0.0337	0.0078	0.0735	0.0603	0.0353	0.0314	0.0407	0.0355	0.0332
4	0.0906	0.0585	0.1261	0.1239	0.0945	0.0883	0.1034	0.0898	0.0862
5	0.1660	0.1393	0.2017	0.1997	0.1686	0.1655	0.1757	0.1667	0.1625
6	0.2420	0.2092	0.2823	0.2778	0.2442	0.2425	0.2472	0.2461	0.2384
7	0.2940	0.2612	0.3273	0.3269	0.2970	0.2935	0.2998	0.2947	0.2902
8	0.3020	0.2675	0.3348	0.3395	0.3050	0.3026	0.3095	0.3037	0.2964
9	0.2530	0.2116	0.2853	0.2858	0.2538	0.2517	0.2578	0.2541	0.2457
10	0.1470	0.0920	0.1775	0.1678	0.1443	0.1465	0.1490	0.1479	0.1426
11	0.0000	-0.0585	0.0316	0.0766	-0.0078	-0.0019	-0.0009	0.0014	-0.0051

Triangular Plate
n = 30, DP

Table 8.8 : Deflections using the mixed mode method

Point No.	W (exact) mm \ radius "a"m	.4	200	1800	3000	7200	14000	1,000,000	10,000,000
1	0.0000	-0.0003	-0.0002	-0.0002	-0.0002	-0.0002	-0.0002	-0.0002	-0.0002
2	0.0052	0.0054	0.0054	0.0054	0.0054	0.0054	0.0054	0.0054	0.0054
3	0.0337	0.0343	0.0343	0.0343	0.0343	0.0343	0.0343	0.0343	0.0343
4	0.0906	0.0919	0.0919	0.0919	0.0919	0.0919	0.0919	0.0919	0.0919
5	0.1660	0.1683	0.1683	0.1683	0.1683	0.1683	0.1683	0.1683	0.1683
6	0.2420	0.2443	0.2443	0.2443	0.2443	0.2443	0.2443	0.2443	0.2443
7	0.2940	0.2970	0.2970	0.2970	0.2970	0.2970	0.2970	0.2970	0.2970
8	0.3020	0.3055	0.3055	0.3055	0.3055	0.3055	0.3055	0.3055	0.3055
9	0.2530	0.2560	0.2560	0.2560	0.2560	0.2560	0.2560	0.2560	0.2560
10	0.1470	0.1483	0.1483	0.1483	0.1483	0.1483	0.1483	0.1483	0.1483
11	0.0000	-0.0000	-0.0000	-0.0000	-0.0000	-0.0000	-0.0000	-0.0000	-0.0000

Table 8.9 : Rate of convergence using I_1

Triangular Plate

Number of Collocation Points	$I_1 = \lvert W_{theo.} - W_{num.} \rvert_{max}$ Wu-Altiero Method	Moment Method	Mixed Mode Method
6	407.60589	2106.51575	325.24887
12	88.30607	201.18038	166.68727
18	5.85533	474.59918	31.65217
24	3.5645	3.58030	3.60287
30	3.47890	3.48307	3.48158

Table 8.10 : Rate of convergence using I_2

Triangular Plate

Number of Collocation Points	$I_2 = \sum_{i=1}^{N} (W_{theo.} - W_{num.i})^2/(N-1)$		
	Wu-Altiero Method	Moment Method	Mixed Mode Method
6	267.86127	1156.76660	116.47147
12	29.48783	65.80098	25.14574
18	3.00183	159.41538	4.50355
24	2.16505	2.19994	1.80809
30	2.10048	2.10467	1.60715

Table 8.11 : Rate of convergence using I_3

Triangular Plate

Number of Collocation Points	$I_3 = \sum_{i=1}^{N} \lvert (W_{theo.} - W_{num.}) \rvert / N$		
	Wu-Altiero Method	Moment Method	Mixed Mode Method
6	238.21047	1001.12583	116.47147
12	14.78288	31.06171	25.14574
18	2.44435	76.37418	4.50355
24	1.65768	1.75889	1.80809
30	1.59045	1.60650	1.60715

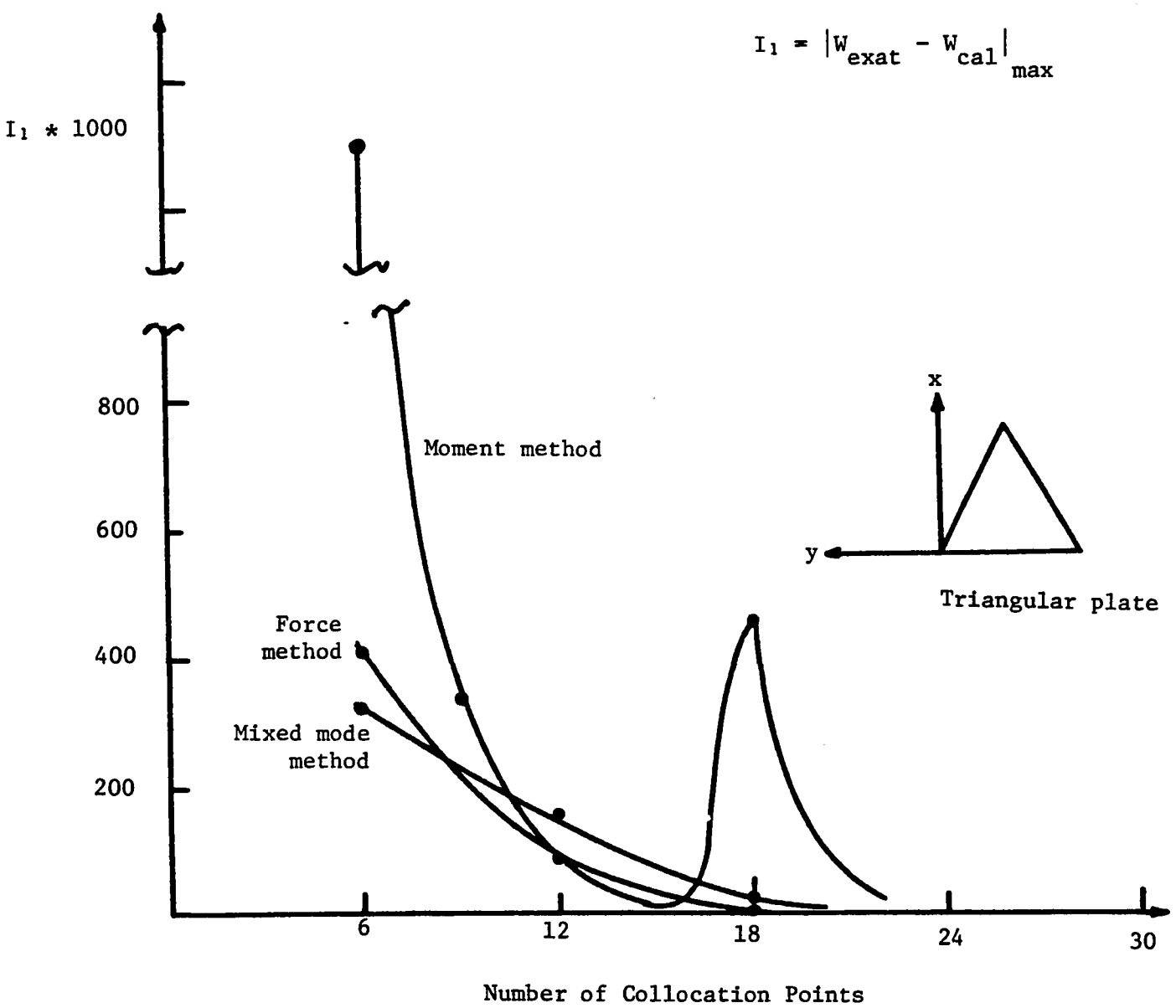

Figure 17 : Comparison of the Congerence of the Three Methods

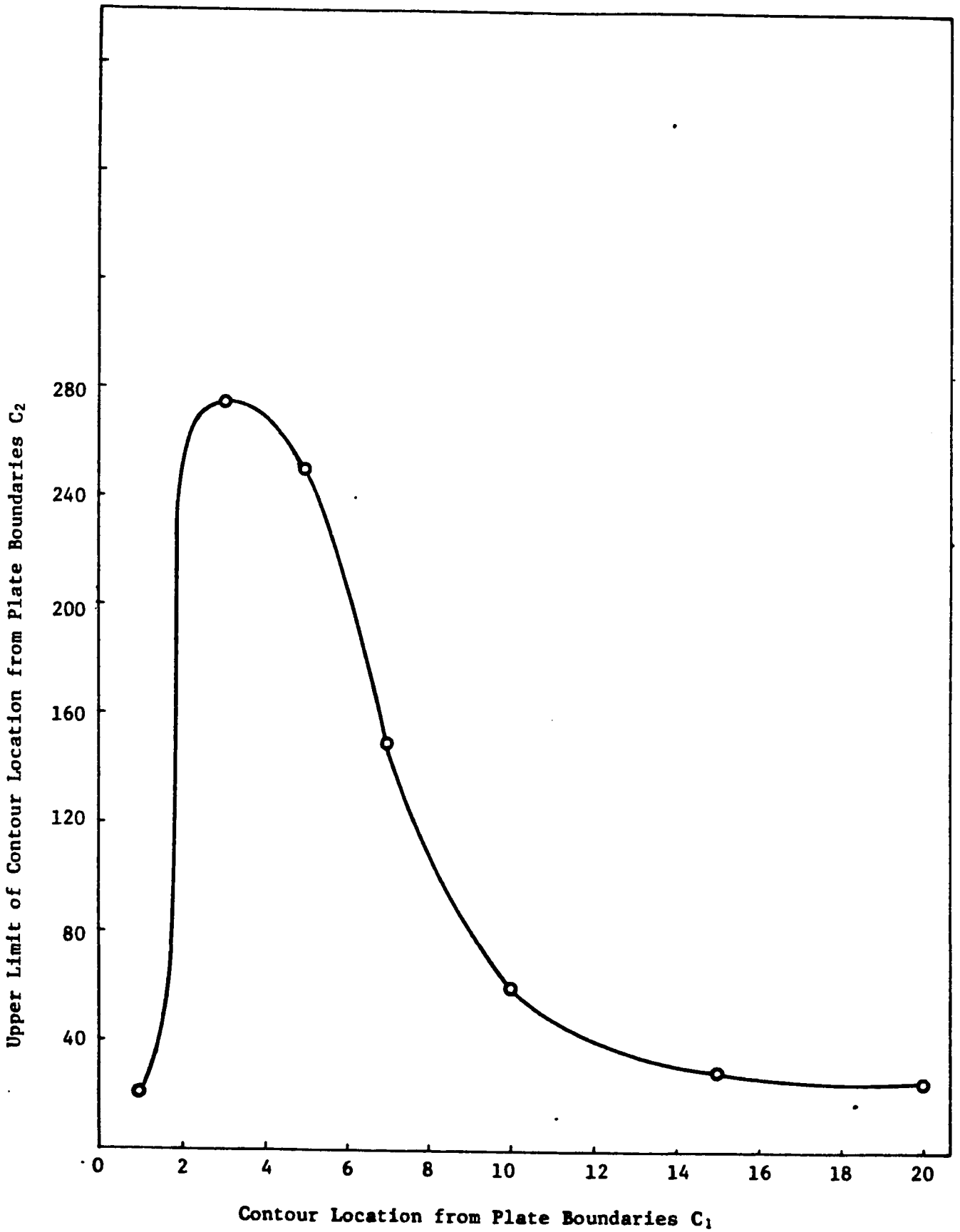

Figure 18 : Contour Location Range

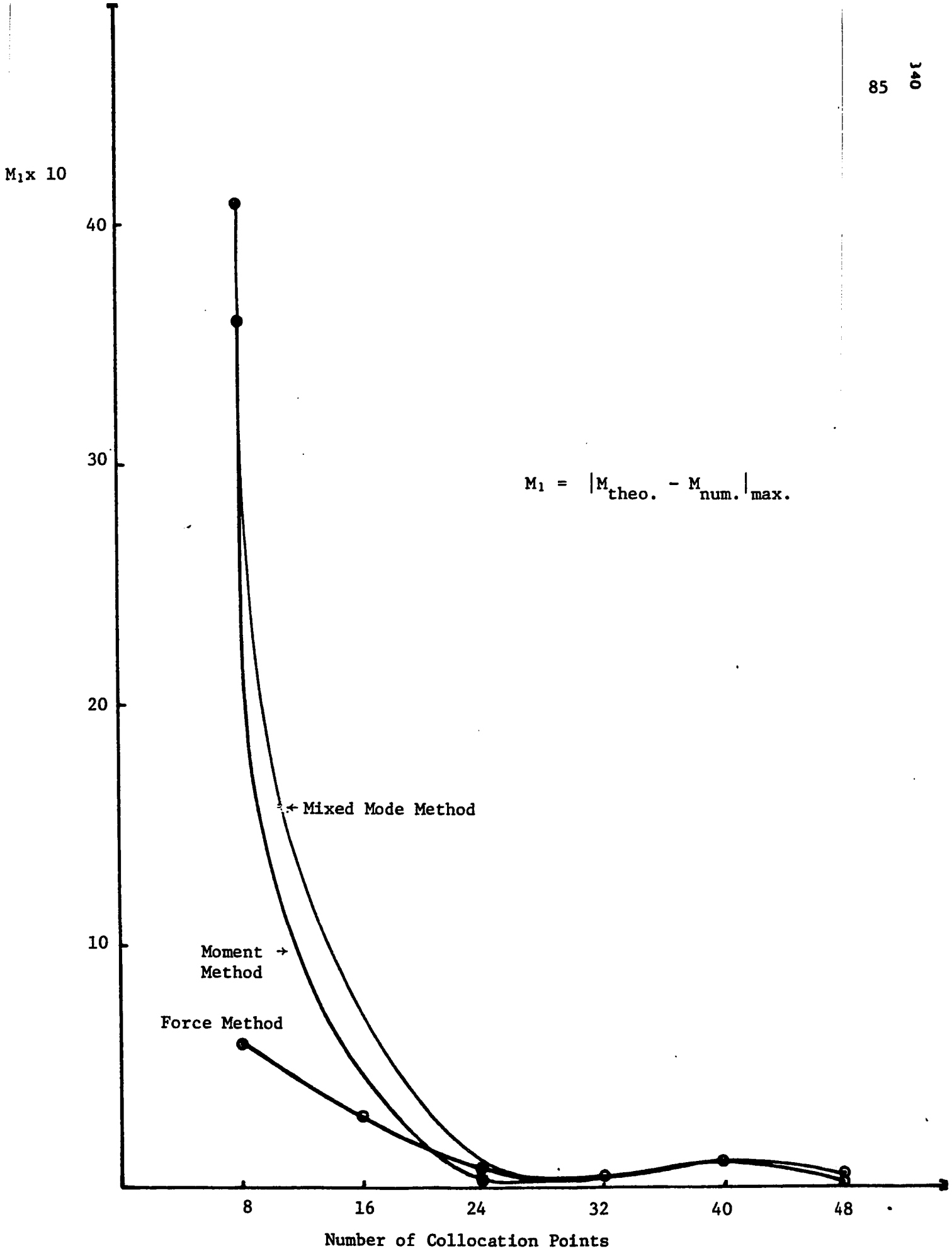

Figure 19 : Rate of Convergence of Maximum Bending Moment (Square Plate)

REFERENCES

[1] S. Timoshenko and S. Woinowsky-Krieger, Theory of Plates and Shells (McGraw-Hill, New York, 1959).

[2] O.C.Zienkiewicz, The Finite Element Method in Engineering Science (McGraw-Hill, London, 1971).

[3] K. C. Rockey, H.R. Evans, D.W.Griffiths and D.A.Nethercort, The Finite Element Method (Wiley, New York, 1975).

[4] D. Bucco, J. Mazumdar and G. Syed, Application of the Finite Strip Method Combined with the Deflection Contour Method to Plate Bending Problems, Computers and Structures 10 (1979) 827-830.

[5] M. Stern, A General Boundary Integral Formulation for the Numerical Solution of Plate Bending Problems, International Journal of Solids and Structures 15 (1979) 769-782.

[6] Wu, B.C. and Altiero, N.J., A New Numerical Method for the Analysis of Anisotropic Thin-plate Bending Problems, Computer Method in Applied Mechanics and Engineering, 25 (1981), pp. 343-353.

[7] Irschik, H. and Ziegler, F., Application of the Green's Function Method to Thin Elastic Polygonal Plates, Acta Mechanica, 39 (1981), pp. 155-169.

APPENDICES

APPENDIX A

Influence Function for an Infinite Plate and Its Derivates

Let $I(x,y,\xi,\eta)$ represent the force influence function for an infinite plate.

$$I\ (x,y,\xi,\eta) = [\frac{(x-\xi)^2+(y-\eta)^2}{16\pi D}]\ \ln[\frac{(x-\xi)^2+(y-\eta)^2}{a^2}]$$

$$\frac{\partial I}{\partial x} = (\frac{x-\xi}{8\pi D})[\ln[\frac{(x-\xi)^2+(y-\eta)^2}{a^2}] + 1]$$

$$\frac{\partial^2 I}{\partial x^2} = \frac{1}{8\pi D}[\ln[\frac{(x-\xi)^2+(y-\eta)^2}{a^2}] + \frac{2(x-\xi)^2}{(x-\xi)^2+(y-\eta)^2} + 1]$$

$$\frac{\partial^3 I}{\partial x^3} = \frac{(x-\xi)}{16\pi D((x-\xi)^2+(x-\eta)^2)}[12 - \frac{8(x-\xi)^2}{[(x-\xi)^2+(y-\eta)^2]}]$$

$$\frac{\partial I}{\partial y} = \frac{(y-\eta)}{8\pi D}[\ln[\frac{(x-\xi)^2+(y-\eta)^2}{a^2}] + 1]$$

$$\frac{\partial^2 I}{\partial y^2} = \frac{1}{8\pi D}[\ln[\frac{(x-\xi)^2+(y-\eta)^2}{a^2}] + \frac{2(y-\eta)^2}{(x-\xi)^2+(y-\eta)^2} + 1]$$

$$\frac{\partial^3 I}{\partial y^3} = \frac{(y-\eta)}{16\pi D\ (x-\xi)^2+(y-\eta)^2}[12 - \frac{8(y-\eta)^2}{(x-\xi)^2+(y-\eta)^2}]$$

$$\frac{\partial I}{\partial x \partial y} = \frac{(x-\xi)\,(y-\eta)}{4\pi D\,[(x-\xi)^2 + (y-\eta)^2]}$$

$$\frac{\partial^2 I}{\partial x^2 \partial y} = \frac{(y-\eta)}{4\pi D[(x-\xi)^2 + (y-\eta)^2]}\left\{1 - \frac{2(x-\xi)^2}{[(x-\xi)^2 + (y-\eta)^2]}\right\}$$

$$\frac{\partial^2 I}{\partial x \partial y^2} = \frac{(x-\xi)}{4\pi D\,[(x-\xi)^2 + (y-\eta)^2]}\left\{1 - \frac{2(y-\eta)^2}{[(x-\xi)^2 + (y-\eta)^2]}\right\}$$

APPENDIX B

Appendix B-1

Transformation of Global Coordinates in Terms of Local Coordinates

x, y are the gloabl coordinates

σ, χ are the local coordinates

From Figure (16) one can write the following

$$x = x_1 + \chi \cos\theta - \sigma \sin\theta$$

$$y = y_1 + \chi \sin\theta + \sigma \cos\theta$$

or

$$x - x_1 = \chi \cos\theta - \sigma \sin\theta$$

$$y - y_1 = \chi \sin\theta + \sigma \cos\theta$$

and by using Cramer's rule χ and δ can be obtained

$$\chi = \frac{\begin{vmatrix} x - x_1 & -\sin\theta \\ y - y_1 & \cos\theta \end{vmatrix}}{\begin{vmatrix} \cos\theta & -\sin\theta \\ \sin\theta & \cos\theta \end{vmatrix}} = (x - x_1)\cos\theta + (y - y_1)\sin\theta$$

$$\sigma = \frac{\begin{vmatrix} \cos\theta & x - x_1 \\ \sin\theta & y - y_1 \end{vmatrix}}{\begin{vmatrix} \cos\theta & -\sin\theta \\ \sin\theta & \cos\theta \end{vmatrix}} = (y - y_1)\cos\theta - (x - x_1)\sin\theta$$

$$\begin{aligned} \chi &= (x - x_1)\cos\theta + (y - y_1)\sin\theta \\ \sigma &= (y - y_1)\cos\theta - (x - x_1)\sin\theta \end{aligned} \qquad (1)$$

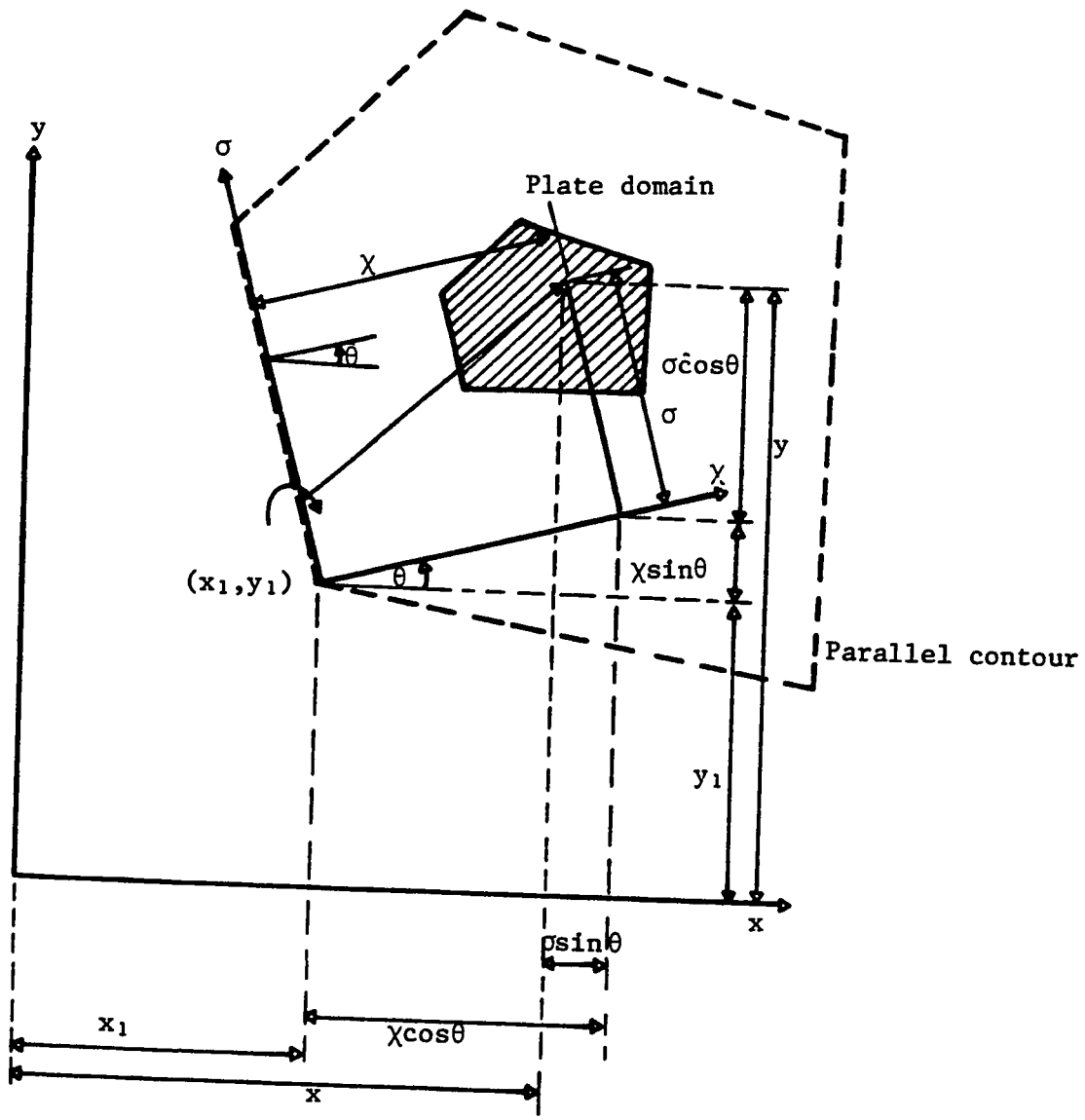

Figure 16 : Transformation of Coordinates

Appendix B-2

Transformation of the Global Derivatives of the Moment Influence Function in Terms of its Local Derivatives

x, y are the global coordinates

σ, χ are the local coordinates

I^M is the moment influence function in terms of local coordinates (σ,χ)

$$\frac{\partial I^M}{\partial x} = \frac{\partial I^M}{\partial \sigma}\frac{\partial \sigma}{\partial x} + \frac{\partial I^M}{\partial \chi}\frac{\partial \chi}{\partial x}$$
$$\frac{\partial I^M}{\partial y} = \frac{\partial I^M}{\partial \sigma}\frac{\partial \sigma}{\partial y} + \frac{\partial I^M}{\partial \chi}\frac{\partial \chi}{\partial y} \qquad (2)$$

Using Equation (1) one can obtain

$$\frac{\partial \sigma}{\partial x} = -\sin\theta$$
$$\frac{\partial \sigma}{\partial y} = \cos\theta$$
$$\frac{\partial \chi}{\partial x} = \cos\theta \qquad (3)$$
$$\frac{\partial \chi}{\partial y} = \sin\theta$$

Using Equations (3) in (2) one can write

$$\frac{\partial I^M}{\partial x} = -\sin\theta\,\frac{\partial I^M}{\partial \sigma} + \cos\theta\,\frac{\partial I^M}{\partial \chi}$$
$$\frac{\partial I^M}{\partial y} = \cos\theta\,\frac{\partial I^M}{\partial \sigma} + \sin\theta\,\frac{\partial I^M}{\partial \chi} \qquad (4)$$

Equation (4) report the gloabl first derivatives of the moment influence function in terms of the local first derivatives. Similarly one can obtain the higher order derivatives.

$$\frac{\partial^2 I^M}{\partial x^2} = \sin^2\theta \frac{\partial^2 I^M}{\partial \sigma^2} - 2\sin\theta \cos\theta \frac{\partial^2 I^M}{\partial \sigma \partial \chi} + \cos^2\theta \frac{\partial^2 I^M}{\partial \chi^2}$$

$$\frac{\partial^2 I^M}{\partial y^2} = \cos^2\theta \frac{\partial^2 I^M}{\partial \sigma^2} + 2\sin\theta \cos\theta \frac{\partial^2 I^M}{\partial \sigma \partial \chi} + \sin^2\theta \frac{\partial^2 I^M}{\partial \chi^2}$$

$$\frac{\partial^3 I^M}{\partial x^3} = \cos^3\theta \frac{\partial^3 I^M}{\partial \chi^3} + 3\sin^2\theta \cos\theta \frac{\partial^3 I^M}{\partial \sigma^2 \partial \chi} - 3\sin\theta \cos^2\theta \frac{\partial^3 I^M}{\partial \sigma \partial \chi^3} - \sin^3\theta \frac{\partial^3 I^M}{\partial \sigma^3}$$

$$\frac{\partial^3 I^M}{\partial y^3} = \cos^3\theta \frac{\partial^3 I^M}{\partial \sigma^3} + 3\sin\theta \cos^2\theta \frac{\partial^3 I^M}{\partial \sigma^2 \partial \chi} + 3\sin^2\theta \cos\theta \frac{\partial^3 I^M}{\partial \sigma \partial \chi^2} + \sin^3\theta \frac{\partial^3 I^M}{\partial \chi^3}$$

$$\frac{\partial^2 I^M}{\partial x \partial y} = (\cos^2\theta - \sin^2\theta) \frac{\partial^2 I^M}{\partial \sigma \partial \chi} + \sin\theta \cos\theta \left(\frac{\partial^2 I^M}{\partial \chi^2} - \frac{\partial^2 I^M}{\partial \sigma^2}\right)$$

$$\frac{\partial^3 I^M}{\partial x^2 \partial y} = \sin^2\theta \cos\theta \frac{\partial^3 I^M}{\partial \sigma^3} + \cos^2\theta \sin\theta \frac{\partial^3 I^M}{\partial \chi^3} + \frac{\partial^3 I^M}{\partial \sigma^2 \partial \chi} (\sin^3\theta - 2\sin\theta \cos^2\theta) + \frac{\partial^3 I^M}{\partial \chi^2 \partial \sigma}(\cos^3\theta - 2\sin^2\theta \cos\theta)$$

$$\frac{\partial^3 I^M}{\partial x \partial y^2} = -\cos^2\theta \sin\theta \frac{\partial^3 I^M}{\partial \sigma^3} + \sin^2\theta \cos\theta \frac{\partial^3 I^M}{\partial \chi^3} + \frac{\partial^3 I^M}{\partial \sigma^2 \partial \chi} (\cos^3\theta$$

$$- 2\sin^2\theta \cos\theta) + \frac{\partial^3 I^M}{\partial \chi^2 \partial \sigma} (2\sin\theta \cos^2\theta - \sin^3\theta)$$

Appendix B-3

The Local Moment Influence Function and its Derivatives

$$I^M(\sigma,\chi,s,n) = \frac{\chi-n}{8\pi D}\,\ell n\left[\frac{(\sigma-s)^2+(\chi-n)^2}{b^2}\right]$$

$$\frac{\partial I^M}{\partial\sigma} = \frac{1(\sigma-s)\ (\chi-n)}{4\pi D[(\sigma-s)^2+(\chi-n)^2]}$$

$$\frac{\partial^2 I^M}{\partial\sigma^2} = \frac{1(\chi-n)}{4\pi D\ [(\sigma-s)^2+(\chi-n)^2]} - \frac{(\sigma-s)^2\ (\chi-n)}{2\pi D\ [(\sigma-s)^2+(\sigma-n)^2]^2}$$

$$\frac{\partial^3 I^M}{\partial\sigma^3} = \frac{-3(\sigma-s)(\chi-n)}{2\pi D\ [(\sigma-s)^2+(\chi-n)^2]^2} + \frac{2(\sigma-s)^3(\chi-n)}{\pi D[(\sigma-s)^2+(\chi-n)^2]}$$

$$\frac{\partial I^M}{\partial\chi} = \frac{1}{8\pi D}\,\ell n\,\frac{[(\sigma-s)^2+(\chi-n)^2]}{b^2} + \frac{2(\chi-n)^2}{8\pi D[(\sigma-s)^2+(\chi-n)^2]}$$

$$\frac{\partial^2 I^M}{\partial\chi^2} = \frac{7(\chi-n)}{8\pi D[(\sigma-s)^2+(\chi-n)^2]} - \frac{(\chi-n)^3}{2\pi D\ [(\sigma-s)^2+(\chi-n)^2]^2}$$

$$\frac{\partial^3 I^M}{\partial\chi^3} = \frac{6}{8\pi D\ [(\sigma-s)^2+(\chi-n)^2]} - \frac{3(\chi-n)^2}{\pi D[(\sigma-s)^2+(\chi-n)^2]^2}$$

$$+\ \frac{2(\chi-n)^4}{\pi D[(\sigma-s)^2+(\sigma-n)^2]^3}$$

$$\frac{\partial^2 I^M}{\partial\sigma\partial\chi} = \frac{1(\sigma-s)}{4\pi D \quad (\sigma-s)^2 + (\chi-n)^2} - \frac{(\sigma-s) \quad (\chi-n)^2}{2\pi D \ \{(\sigma-s)^2 + (\sigma-n)^2\}^2}$$

$$\frac{\partial^3 I^M}{\partial\sigma^2\partial\chi} = \frac{1}{4\pi D \ [(\sigma-s)^2 + (\chi-n)^2]} + \frac{2(\sigma-s)^2(\chi-n)^2}{\pi D \ [(\sigma-s)^2 + (\chi-n)^2]^3}$$

$$\frac{\partial^3 I^M}{\partial\chi^2\partial\sigma} = \frac{2(\chi-n)^3(\sigma-s)}{\pi D \ [(\sigma-s)^2 + (\chi-n)^2]^3} - \frac{3(\chi-n) \quad (\sigma-s)}{2\pi D \ [(\sigma-s)^2 + (\chi-n)^2]^2}$$