Buckling of Multiple Braced Columns

by

Nudhal Abdul-Razzag Abu-Salhah

A Thesis Presented to the

FACULTY OF THE COLLEGE OF GRADUATE STUDIES

KING FAHD UNIVERSITY OF PETROLEUM & MINERALS

DHAHRAN, SAUDI ARABIA

In Partial Fulfillment of the
Requirements for the Degree of

MASTER OF SCIENCE

In

CIVIL ENGINEERING

June, 1982

Order Number 1355702

Buckling of multiple braced columns

Abu-Salhah, Nudhal Abdul-Razzag, M.S.

King Fahd University of Petroleum and Minerals (Saudi Arabia), 1982

U·M·I
300 N. Zeeb Rd.
Ann Arbor, MI 48106

BUCKLING OF MULTIPLE BRACED COLUMNS

by

NUDHAL ABDUL-RAZZAG ABU-SALHAH

THESIS

Presented to

THE COLLEGE OF GRADUATE STUDIES

University of Petroleum and Minerals
Dhahran, Saudi Arabia

In Partial Fulfillment of the
Requirements for the Degree of

MASTER OF SCIENCE IN CIVIL ENGINEERING

JUNE 1982

UNIVERSITY OF PETROLEUM & MINERALS
DHAHRAN, SAUDI ARABIA

COLLEGE OF GRADUATE STUDIES

This thesis, written by Mr. Naudhal Abdul-Razzag Masoud Abu-Salhah under the direction of his Thesis Committee, and approved by all its members, has been presented to and accepted by the Dean of the College of Graduate Studies, in partial fulfilment of the requirements for the degree of Master of Science in Civil Engineering.

Dean
College of Graduate Studies

Date 9/8/89

Department Chairman

Thesis Committee

(A.K. Azad)
Chairman

Member

Member

بسم الله الرحمن الرحيم

IN THE NAME OF ALLAH,
THE MERCIFUL,
THE MERCY-GIVING

"وأنزلنا الحديد فيه بأس شديد ومنافع للناس"
صدق الله العظيم

"And we sent down Iron, in which there is mighty strength, as well as many benifits for mankind"

Allah Says the Truth

Dedicated to my
dearest Mother
and to the loving
memory of my
late Father ...

ACKNOWLEDGEMENT

I acknowledge the University of Petroleum and Minerals, Dhahran, Saudi Arabia, for using their facilities during the period of this research.

I owe a great deal of gratitude to Dr. Abul Kalam Azad, Chairman of my Thesis Committee, for his guidance and cooperation during the course of this research.

I am also grateful to Drs. Nabil El-Atrouzy and Tom G. Brown, the members of my Thesis Committee, for their constructive suggestions and criticism. Despite heavy demands on their time, they were always accessible without formality.

I sincerely remember those few friends who actively helped me in different phases of this work.

CONTENTS

chapter *page*

chapter *page*

LIST OF TABLES

LIST OF FIGURES

figure *page*

figure *page*

بسم الله الرحمن الرحيم

الخلاصة

هذه الرسالة تتضمن بحثا عمليا تم تطبيقه على الاعمدة الحديدية المترابطة معا بواسطة الدعامات الحديدية، وذلك لبحث انه بالامكان زيادة قوة تحمل مجموعة من الاعمدة المتوازية بمقدار ملموس وذلك بواسطة ربطها ودعمها في آن واحد بواسطة قضبان حديدية داعمة خفيفة جدا. علما بانه من الصعب تخمين قوة تحمل اى عمود بصورة دقيقة من خلال الطرق النظرية حيث أن قوة تحمل اى عمود حديدى حقيقي تتأثر وتقل بصورة ملموسة بسبب وجود الضغوط الاولية (التي تنشأ عند تصنيع الاعمدة) بالاضافة الى كون هذه الاعمدة من الصعب وجودها في حالة مستقيمة استقامة تامة او خالية من الانحرافات المبدئية مهما صغرت والتي بالتالي تضعف من تحمل العمود، وكما هو معلوم فانه من الصعب تحديد هذه المؤثرات نظريا. هذا بالاضافة الى ان كمية البحوث النظرية التي تناولت بحث هذا الموضوع محدودة وقليلة، وذات صبغة مثالية ونظرية وغير مدعّمة بالادلة والابحاث العملية المطلوبة دائما في مثل هذه الدراسات والمواضيع الانشائية. لهذا كله، كانت الدراسة والبحث العملي مطلوب لاعطاء براهين فعّالة ومحسوسة عن مدى التحمل الفعلي لهذا النوع من الاعمدة المترابطة وفي نفس الوقت معرفة القوى والمواصفات المطلوبة لتصميم الدعامات الرابطة لهذه الاعمدة.

نتائج البحث كانت موفقة ومشجعة حيث تم بحث طريقتين من طرق التدعيم (البحث تناول تدعيم ثلاثة اعمدة معا. في الحالة الاولى بواسطة دعامات في الوسط، وفي الحالة الثانية بواسطة دعامات عند كل ثلث مسافة من طوله مع تغير مواصفات الدعامات على مراحل اختبارية في محاولة للوصول الى ادنى حد يمكن فيه الاعتماد على هذه الدعامات في سبيل دعم وزيادة قدرة تحمل تلك الاعمدة الرابطة لها). حيث وجد انه بامكان هذه الاعمدة ان تتحمل قوى أكبر بكثير من مدى تحملها في حالة كونها غير مدعّمة وذلك بواسطة قضبان حديد صغيرة وخفيفة ورخيصة جدا. علما بان نتائج البحث تطابق وتدعم البحوث النظرية الى حد كبير.

ABSTRACT

Experimental research has been conducted on an inter-braced-column system to investigate that the load carrying capacity of a series of straight columns would be increased effectively by bracing them with very light braces. It is difficult to predict reliably the strength of any column by theoretical methods, where the strength of an actual steel column is impaired by the presence of residual stresses and initial imperfections (crookedness). In addition, however, very limited theoretical study without experimental investigation has been carried out. Therefore, the experimental work is needed to provide satisfactory evidence of the predicted buckling loads of an interbraced-column system and the corresponding brace forces.

The results of the study indicate that very large gains in the column carrying capacity can be achieved by using a light bracing system of small strength and rigidity. Also these results agreed to large extent with the theoretical studies.

chapter **1**

INTRODUCTION

1.1 General Introduction

Bracing in any structure plays an important factor in increasing its stability and rigidity. There are mainly two kinds of structural bracing : (1) That are provided to resist secondary loads (i.e. wind loads or dynamic loads). A typical example is the cross-bracing of the end bays or the roof bracing in a steel framed structure. (2) That are provided to increase the carrying capacity of the structural members by preventing them from buckling in their weak axis. In addition, braces are often used to support cladding or roof sheetings in a steel framed building.

The present investigation deals with the second type of bracing (bracing against buckling) in the form of an investigation of a series of three parallel columns (inter-braced-column system) braced together to increase their carrying capacity.

1.2 Literature Review

The study of both the buckling behaviour of a single or a group of interbraced-column under an axial load, and the

forces in the bracing system, was and is still one of the most interesting problems in the field of structural stability. In the professional practice of structural engineering the designer will always face the situation where it is necessary to determine the characteristics required of any lateral bracing system in order to increase the lateral stiffness and hence the carrying capacity of the associated column system, or, to decide whether a given bracing system is adequate to provide the required lateral support.

William Zuk (1956)[1] was one of the first to study the buckling behaviour of a single braced-column. He derived quantitatively and experimentally the amount of bracing forces required for eight representative cases of beams and columns. Two of these eight cases are within the scope of this thesis research work. The first one of these two cases, that of a single column with a concentric axial load and an'immovable point support' at mid-height. The second is the case of a column with a concentric axial load but, with an 'elastic lateral support' at mid-height. Zuk proved that the maximum brace force which would force the column to buckle in two half-wave failure in the case of the immovable support is very small (approximately 0.6% of the buckling load) and it is a direct function of the initial imperfection. Refer to Appendix A for notations and Zuk's theoretical

solution for this case.

For the case of the elastic support at mid-height, Zuk presented the solution of (Winter, Green and Cuykendall - 1947)[2] for such a case. The solution gives two formulas for the brace forces - one when the column buckles in one half-wave failure, the other when the column is forced to buckle in two half-wave failure as in the case of the 'immovable support'. See Appendix B for these two solutions.

The next table (Table 1) presents the output of the experimental work done by Zuk for the previous two cases (The immovable support case and the elastic support case) for a W10 x 33 rolled steel column, 20 ft. long with an initial crookedness of 1/1000 of the column length.

TABLE 1 : Experimental bracing force values 'F' for single column braced at mid-height (By Zuk)[1]

Case	F as % P	Conditions of Axial Load P
1	0.53	P based on buckling valve
2	2.00	P taken as 0.8 P_{cr}

Therefore Zuk could conclude (with the support of experimental work) that the assumption of the bracing force for the single axially compressed column to be taken as 2% of the applied load, seems to be a reasonable and useful rule.

But he advised more numerical and full scale tests to support this 2% rule.

George Winter (1958)[3] studied the buckling behaviour of a single braced-column in more detail. His work contained both experimental and simplified analysis of an initially imperfect (crooked) column with one or more intermediate supports. He based his mathematical analysis on an elastically supported column, and this column is assumed to be initially imperfect and braced at equal intervals by equally rigid braces.

He proved that very large increases in column carrying capacity can be achieved by very light and inexpensive bracing. Also he proved that for bracing against buckling to be effective, it must possess not only the requisite strength, but also a definite minimum rigidity. In addition, his experimental work clarified an important point, that the greater the rigidity the larger the gain in the column carrying capacity and the greater the rigidity of the bracing the smaller the strength required of it to produce a given column capacity.

Finally, he gave simplified methods which help to determine the lower limits of strength and rigidity required to produce full bracing in a single braced-column. These brace forces are effected directly by initial imperfections.

See Appendix C for Winter's mathematical analysis and his simplified methods.

Additional work, both experimental and theoretical, that has been performed since that of Zuk and Winter on single braced-column system, all seems to support Zuk's and Winters' studies. Therefore a design code could be established safely. In which, now most design codes have adopted a value of 2 to 2½ % of the axial load on a single braced-column as a design transverse shear in the bracing.

The problem of multiple interbraced columns (series of straight columns braced together) and acted on by axial loads, has been investigated recently. Unfortunately, very few theoretical studies for such a system are available and no experimental investigation has been made before the present investigation.

Medland and Segedin (1977, 1979)[4,5] outlined a set of four theoretical and nondimensional equations from which the maximum load in any brace within the type of structure shown in Figure 1 can be evaluated. These four equations present brace loads as percentages of the axial load in the supported columns. Also, typical results were plotted nondimensionally by using the previous four design equations and these serve as design charts. The charts (Appendix D) summarise the results of computations made on structures comprising up to six compression members in parallel (inter-braced) by up to

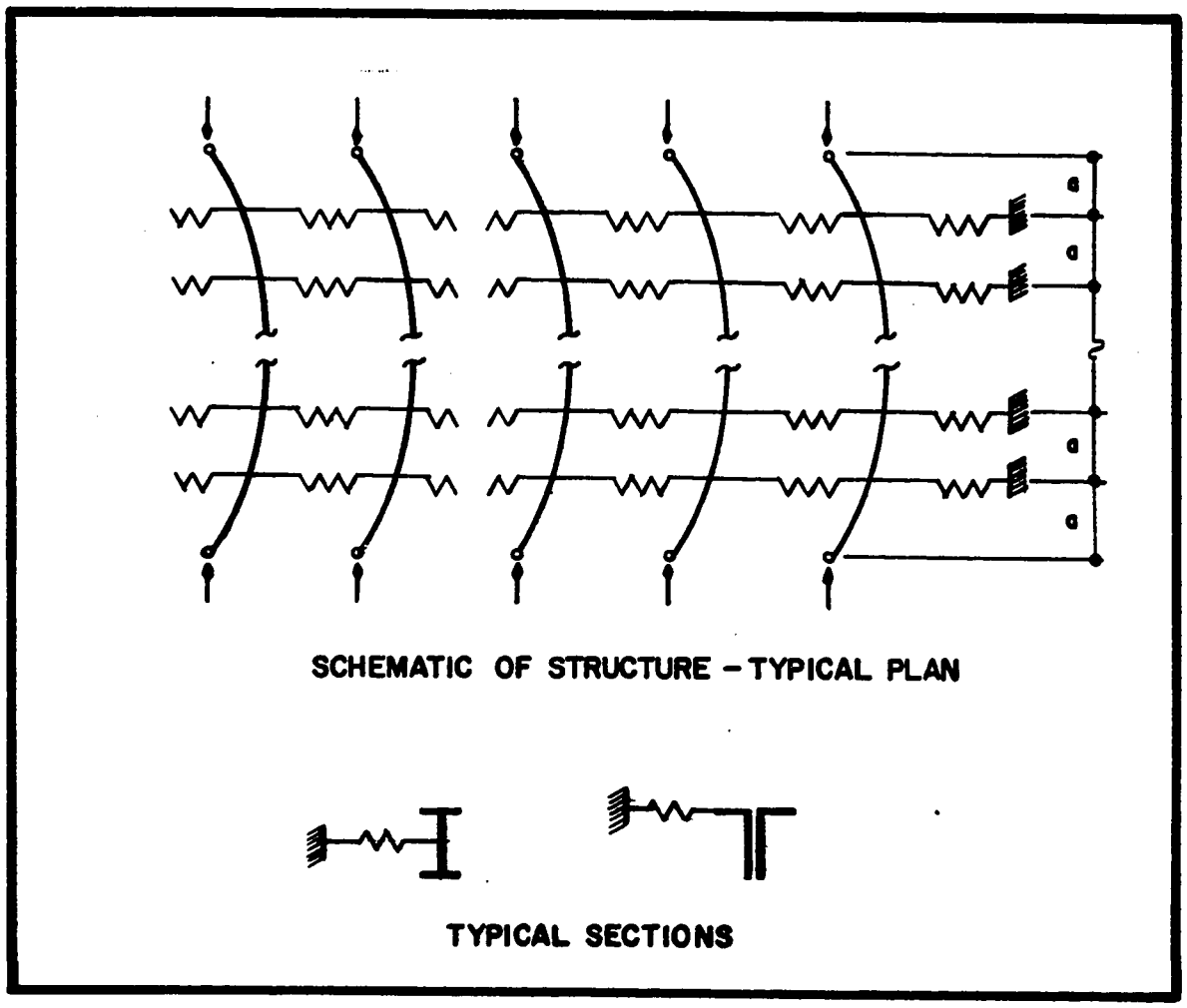

Figure 1 : TYPICAL STRUCTURE OF MEDLAND ANALYSIS

twelve lines of braces. Both 'uniform' and 'parabolic' axial force distributions within the column length are considered. Therefore, by using these charts, any brace loads can be extracted for a given column system and given axial column loads. The columns are assumed to be identical, simply supported and to have the same orientation and the same initial imperfections. In addition all braces are assumed to have a linear elastic stiffness and are attached to the structure unstrained before the axial load is applied. The design basis and its limitations were given to guide the use of either the design equations or the design charts. These guidelines should be followed thoroughly by the designer before starting the design.

Williams (1980)[6] carried out another theoretical study on the interbraced-column system. He studied two problems. The first was to find the lowest elastic critical loads of columns which are braced by elastic braces. The second was to find how a brace which supports the out of plane displacements of a set of parallel co-planar columns (interbraced-columns) can be replaced by equivalent springs.

In both problems the ends of members-columns or braces-can be elastically supported, simply supported or clamped. He illustrated three methods for finding the lowest elastic buckling loads of columns and the equivalent spring

constants for the braces. The first method is exact and computer facilities are needed for its solution. The second method is an approximate hand method. The third method is a graphical method and he established this method from the exact method. This graphical method presents four buckling curves for columns and three curves cover uniform braces. For the column buckling curves, all columns should be continuous and supported by an elastic supports of the same spring constant and they must be evenly distributed. Also, the analysis requires that all the columns in the interbraced-column structure have identical or suitably interrelated loading as must the braces.

The simplicity of William's analysis for the interbraced system is illustrated by the fact that the analysis involves only analysing one brace and column out of the whole structure.

1.3 Scope and Objectives

Buckling behaviour of a single braced-column under an axial load is well known. A considerable amount of literature exists dealing with the buckling loads and the brace forces of the bracing system[1,3].

In recent years attempts have been made to study the behaviour of multiple interbraced-columns under axial loads,

where it is believed that the carrying capacity of these columns can be increased by bracing them together. Only limited theoretical study (without experimental investigation) of such a system has been done[4,5,6]. In addition, all these available theoretical analyses deal with ideal cases (i.e. ignoring the effect of residual stresses or assuming ideal columns-without initial imperfection or with assumed initial deformed shape). The analyses are either exact and require a computer or approximate methods which need lengthy hand calculation with many limitations and restrictions. Thus a need for experimental research in this area is clearly indicated to provide and develop useful design data to predict the buckling loads and the brace forces for interbraced-column structures and to provide some comparison with the existing theories.

The primary objective of this research work is to carry out experimental study to obtain information on the following :

1) Prediction of the buckling behaviour and loads of multiple interbraced-columns.
2) Determination of the effects of brace stiffness and spacing on the buckling loads.
3) Criteria of limiting values of brace stiffness and spacing so that the buckling of columns in the plane of

bracing is prevented.

A series of buckling tests were planned to be performed on a three-column structure braced either by one brace line at mid-height of the columns or by two lines of braces, each at one third of the columns' length. The brace stiffnesses were planned to be varied from one experiment to another to determine their effects on buckling loads and to measure the magnitude of the brace forces.

A rigid test frame has been used to support the loading jacks and test specimens. All columns were planned to be pin-ended. Strain gages were used to measure stresses in braces and columns. Dial gages were used during experiments to monitor the direction of the lateral displacement of the columns.

chapter **2**

EXPERIMENTAL PROGRAM

2.1 Introduction

The experimental program consisted primarily of designing and fabricating a suitable test frame, preparing all column test specimens and bracings, instrumenting and setting up tests, testing and recording data from each test.

A system of three braced-column structure as shown in Figures 2 and 3 was chosen for testing, representing two cases of bracing system used in this investigation. In first case, the columns were braced only at the mid-length (Figure 2) and in the second case, the columns were braced at each one-third length (Figure 3). The axial load in each column was applied by a hydraulic jack pressing against the test frame. Electrical strain gages were used to measure strains in columns and braces.

Initially for column loading, an attempt was made to use a gasoline powered hydraulic jacking machine available in the laboratory. The machine had the capability of using several jacks at the same time. However, due to difficulty in controlling the load levels and maintaining equal load in each column, this arrangement of applying load was found

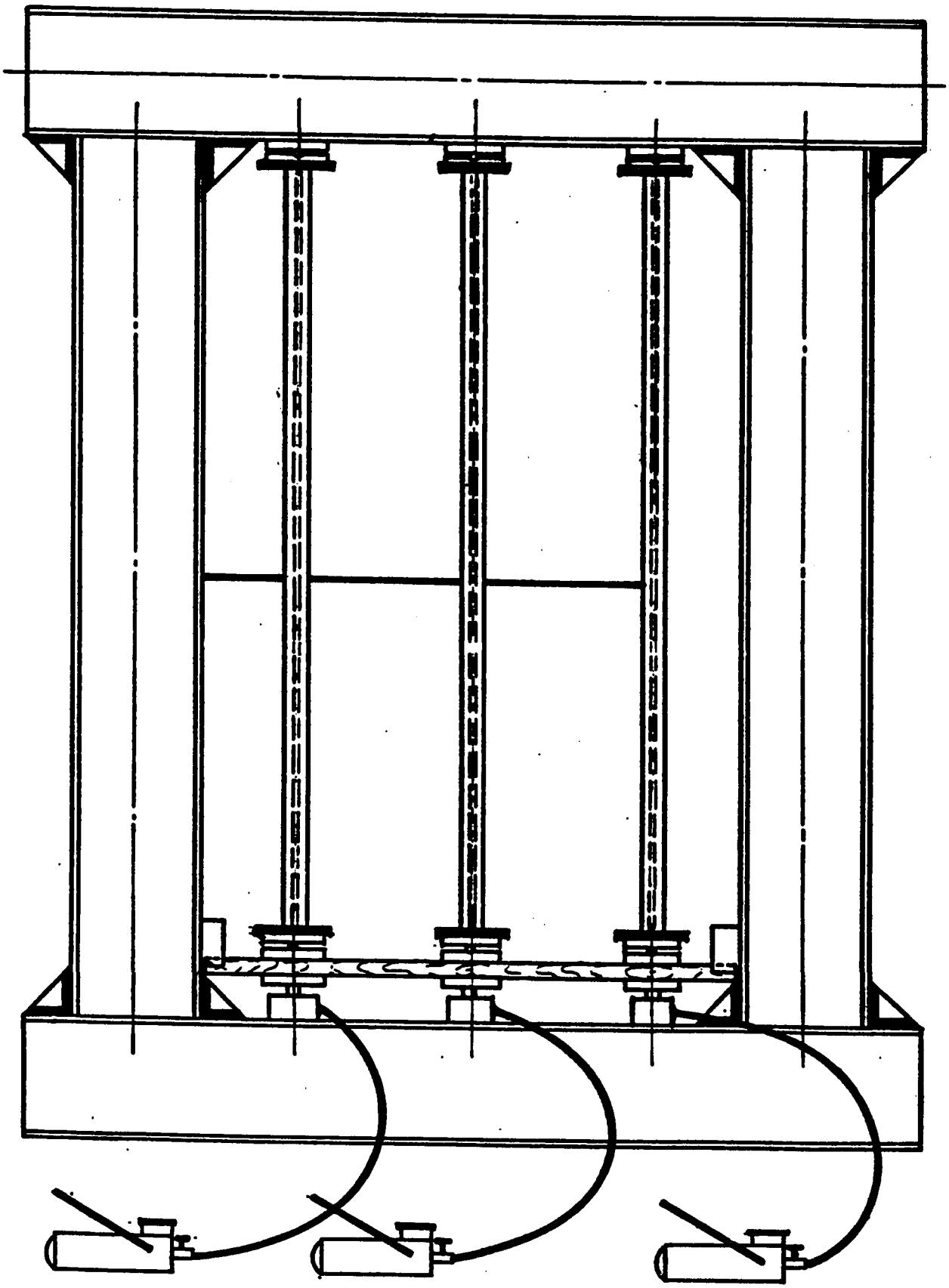

Figure 2 : PLAN - ARRANGEMENT OF A SINGLE-INTERBRACED SYSTEM

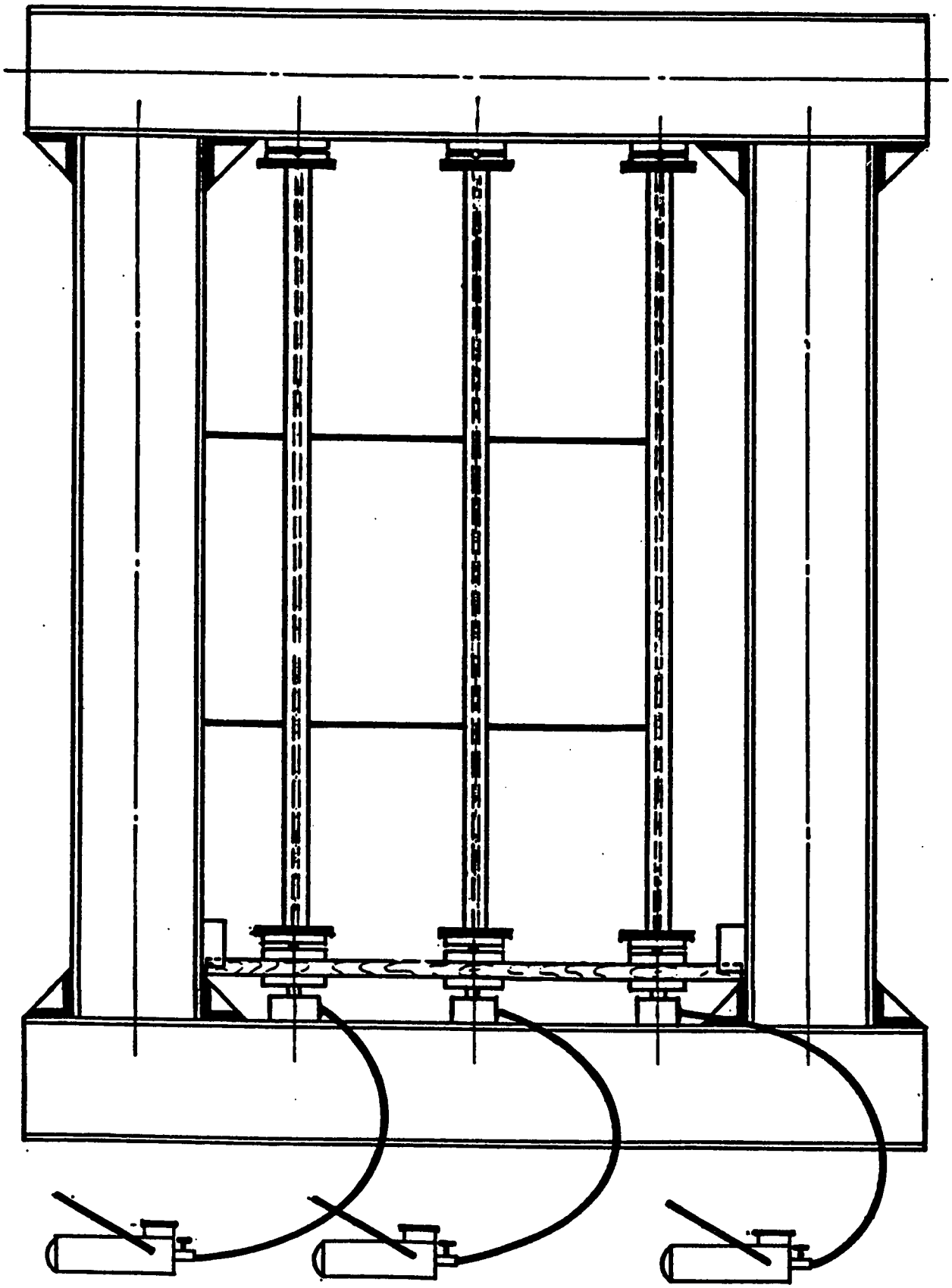

Figure 3 : PLAN - ARRANGEMENT OF A DOUBLE-INTERBRACED SYSTEM

unsatisfactory and was thus abandoned. A similar machine with an electrical motor was used next. Though some improvement was observed, the problem of controlling loads at high levels remained. Several tests resulted in abrupt failures showing that the loading system cannot be relied upon for satisfactory buckling tests. It was decided finally to go along with three independent manual hydraulic jacks, one for each column, which can be controlled easily and accurately at any level of loading. The loading in each column was verified by the strain readings. The initial column imperfection was measured for each column before they were instrumented and used as test specimens.

2.2 Test Setup

2.2.1 Frame Design and Fabrication

A rectangular rigid steel test frame was designed using IPN450 steel sections to support three jacking loads of 30 ton (67 kip) each. The frame was fabricated at the University machine shop. The details of the frame are shown in Figures 4 and 5. The inside clear space within the frame was about 3 m x 1.8 m. The frame dimensions were chosen taking into consideration the limitation of space within the laboratory. All frame connections were bolted, so that the frame can easily be dismantled and transferred elsewhere for reuse.

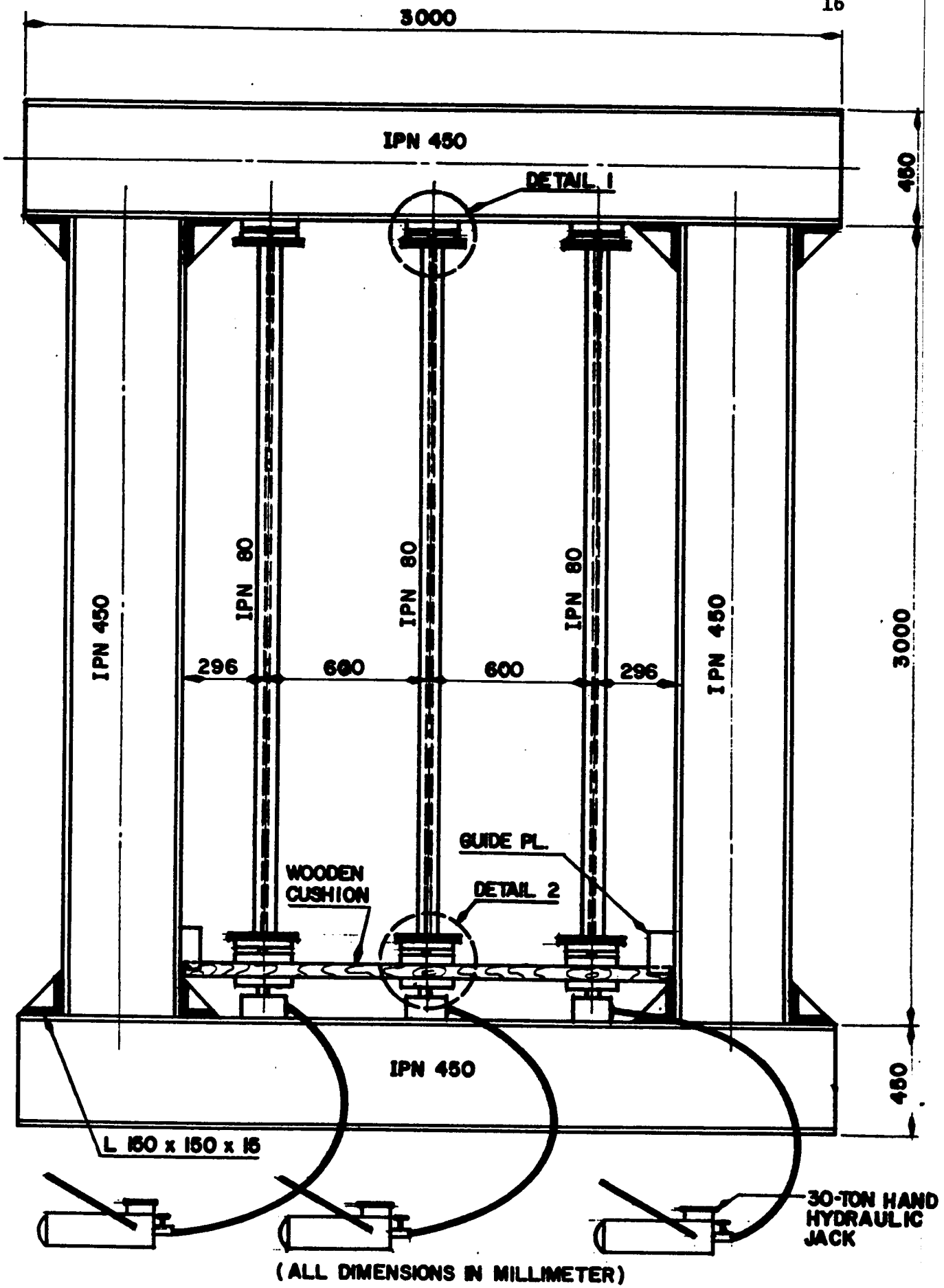

Figure 4 : TEST FRAME - PLAN & DETAILS

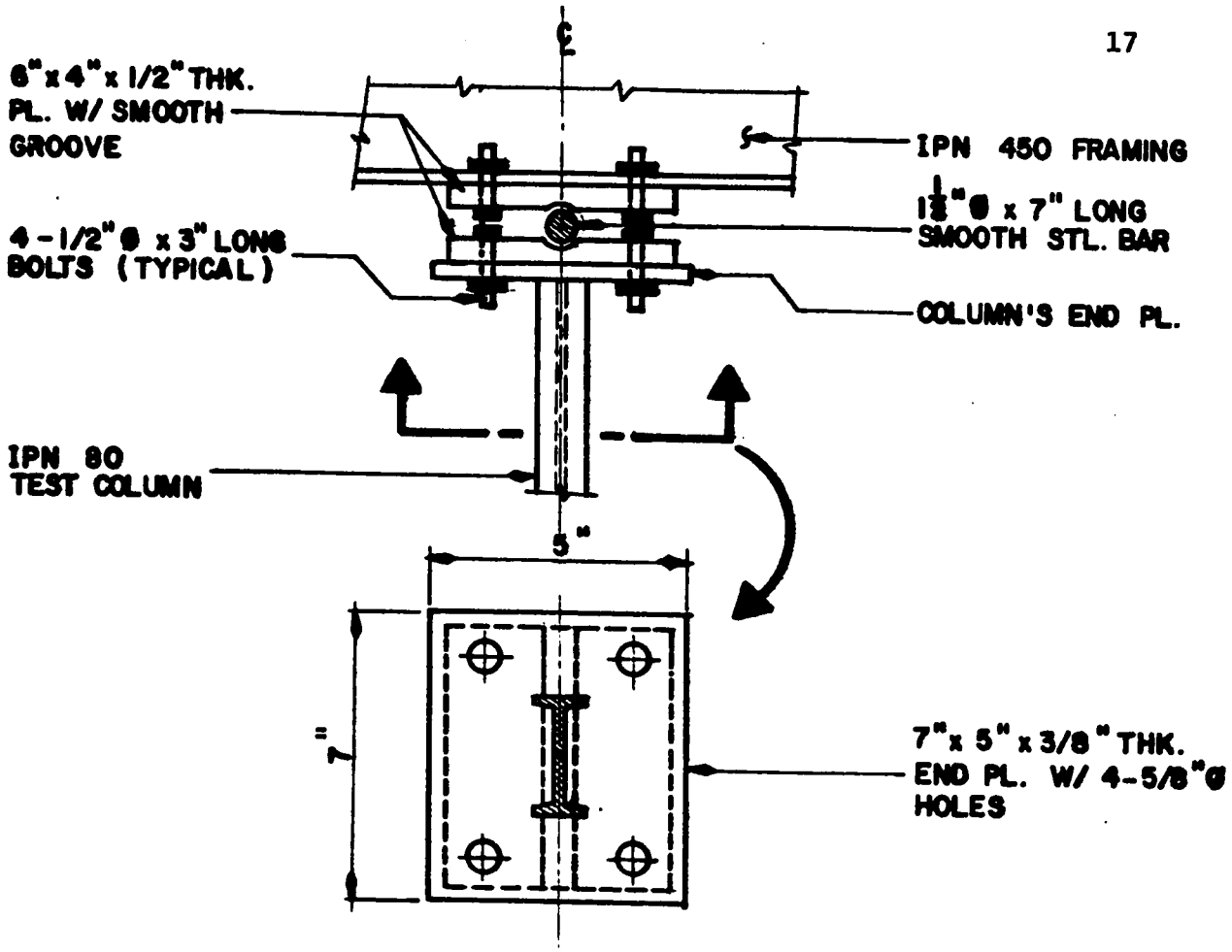

DETAIL 1

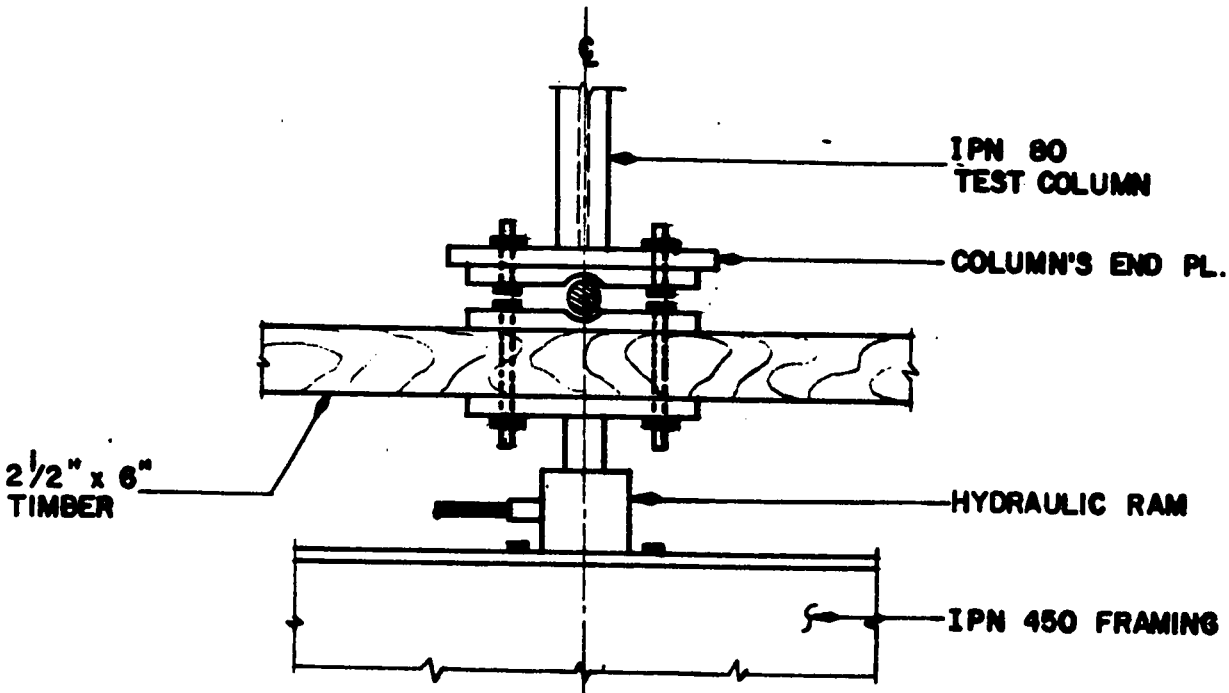

DETAIL 2

Figure 5 : DETAILS OF TEST FRAME

A thick timber plank was used in between the column ends and the jacks as shown in Figure 4 to provide a lateral support to the movable end of the structure.

2.2.2 Materials

2.2.2.1 Experimental columns : IPN80 steel I-section was selected as experimental columns properties of which are shown in Table 2. Each column was of 103 in. long. This section was chosen on the basis of the following considerations:

a) It was readily available in the local market.

b) Section has a ratio $\frac{r_x}{r_y} = 3.52$ which ensured that the buckling of the column would always occur in the weak axis (braced plane).

c) The capacity of the column was before the capacity of the available loading jacks also the self weight of the column, being low, was not be a hinderance to easy handling.

Each plate of 3/8" thickness with four 5/8"ϕ holes for ½"ϕ x 3" long bolts was welded at each column end. Columns were provided with pinned ends. Figure 5 shows details of the pin-connections and base plates.

2.2.2.2 Experimental braces : A number of ASTM A-36 steel plates or flat strips of different widths and thickness were used as braces. These plates and strips were shaped carefully to meet the required experimental stiffness

TABLE 2 : EXPERIMENTAL COLUMN

COLUMN SECTION PROPERTIES:

DIMENSIONS			
d	b_f	t_w	t_f
3.150"	1.654"	0.1535"	0.2323"
80mm	42mm	3.9mm	5.9mm

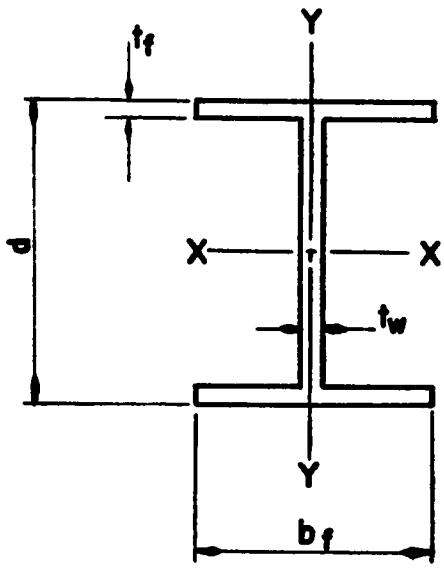

IPN 80

AREA : 1.1734 in^2

WEIGHT : 3.992 lb/ft.

X - X (in)			Y - Y (in)		
I_x	S_x	r_x	I_y	S_y	r_y
1.869	1.189	1.260	0.151	0.183	0.358

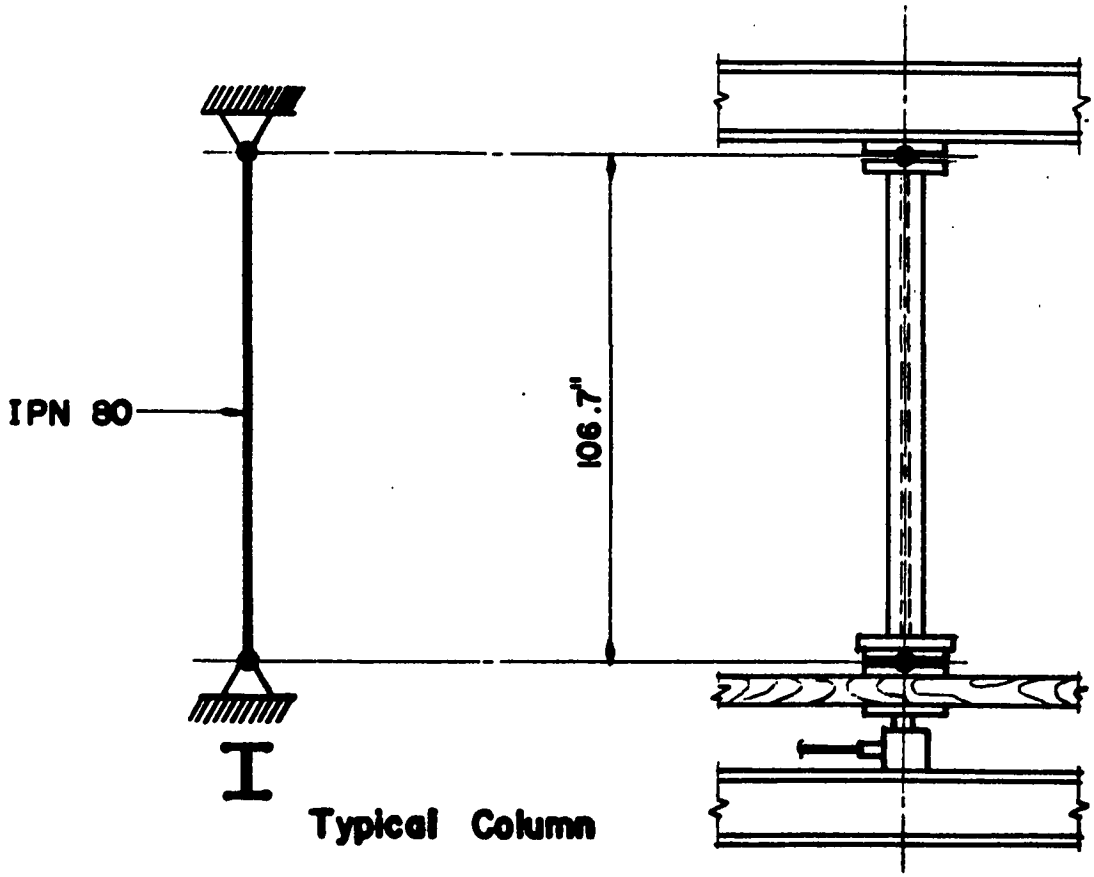

Typical Column

variations. Thickness was kept as delivered, while widths were cut and fabricated to suit the requirements. 1/8" thk. and 3/16" thk. flat braces were used. Figure 6 shows sample of braces used in the experiments.

2.2.2.3 Strain gages and lead-wire material : Electrical strain gage of type EL-FAE strain gages of 120 Ω and 2.04 ± 1% gage factor were used with a 1 mmϕ nickel-clad silver wires coated with nylon as a lead-wire material.

2.2.3 Preparation of Test Specimens

2.2.3.1 Preparation of columns : All column specimens were cut from a six meter standard lengths. It was ensured that all test specimens appeared straight before preparation. Each end of a column was welded with a base plate. The welding was done carefully and accurately, ensuring that the plate was at right angle to the longitudinal axis of the column. Also, to avoid any weld failure due to poor welding, all areas exposed to welding were cleaned before welding.

After a column was fitted with end plates, single strain gages, minimum four, were mounted on each column web, to cancel the effect of bending if any, as shown in Figure 7.

The standard procedures were followed for cleaning the surface on which the gage is to be mounted on, cementing, lead-wire installation and testing of strain gages.

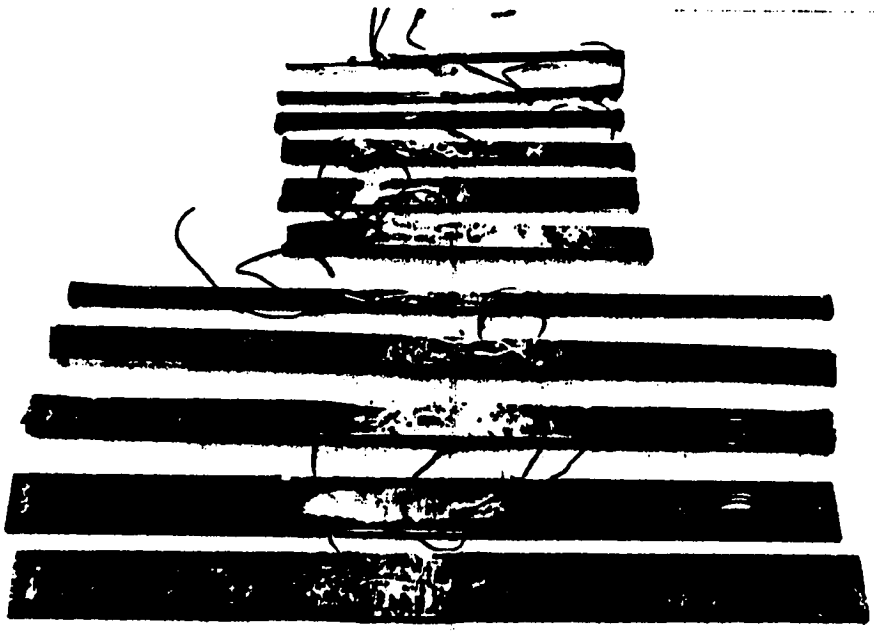

Figure 6 : Sample of braces used in the experiments

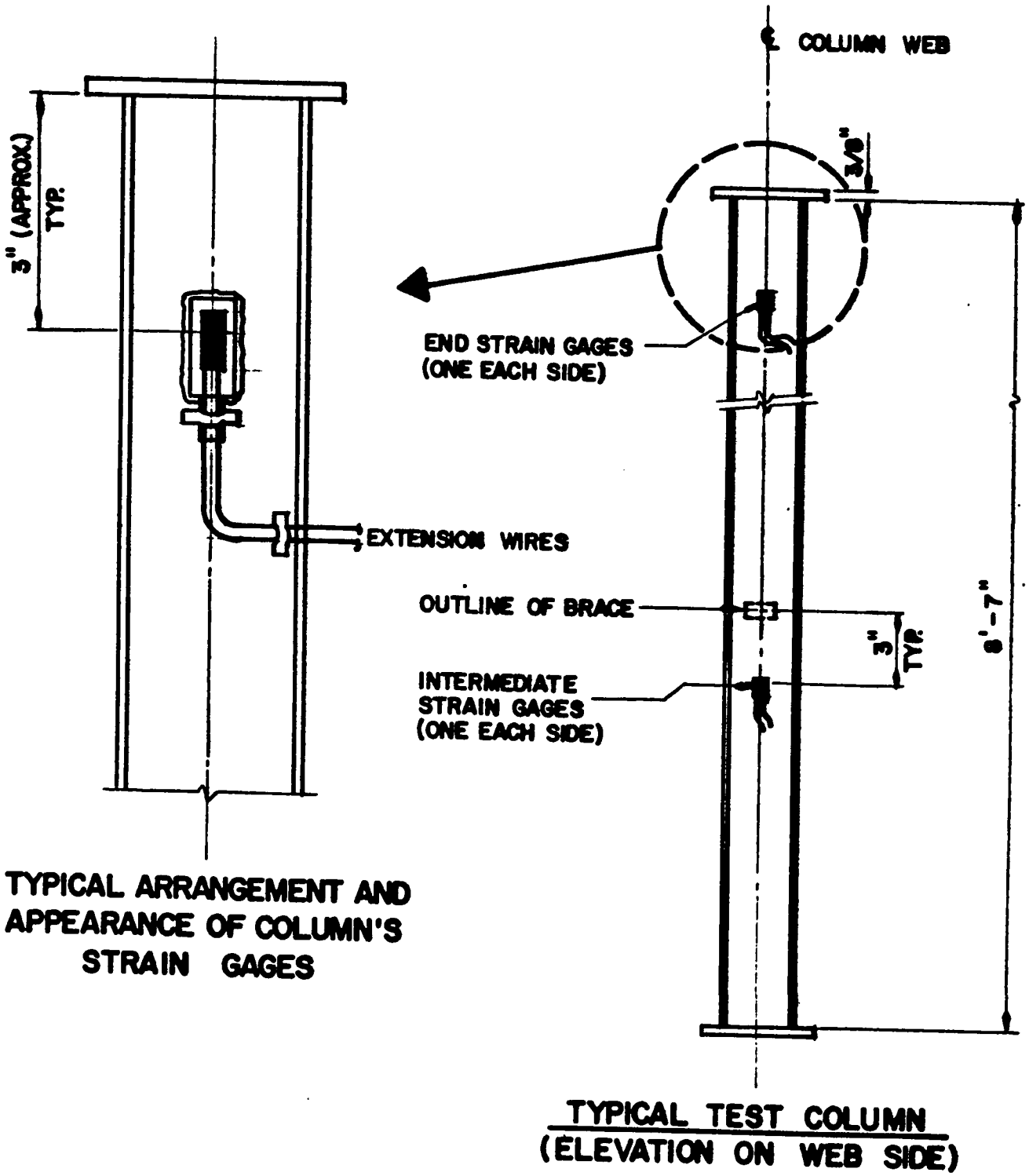

Figure 7 : ARRANGEMENT OF COLUMN'S STRAIN GAGES

2.2.3.2 Preparation of braces : Braces were machined from different available steel plates to the desired widths and lengths. Their widths were varied from a maximum of 3.4 cm to a minimum of 0.7 cm. They were of two major thickness : 1/8" and 3/16". The 1/8" thickness was used for the short braces (11.6" long) while the 3/16" thickness was used for the long braces (23.5" long).

The machining was done by a sophisticated mechanical saw to ensure flat bars with constant widths. These widths are needed to be accurate to the nearest mm. During the process of machining, braces were handled carefully to keep the surface flat. Two single strain gages were fixed longitudinally on the middle center of each brace as shown in Figure 8. Furthermore, this arrangement cancels the effect of bending,if any.

2.2.3.3 Measurements of the initial column imperfection: A movable dial gage fixed to a steel table having a thick and smooth steel cover plate as shown in Figures 9 and 10 was used for the measurement of the initial column imperfections. This table can be accurately leveled horizontally. The measurement was taken before fixing any strain gage to prevent its damage during handling. The column web was cleaned before taking measurement with a brush and a clean cloth.

The following steps were followed :

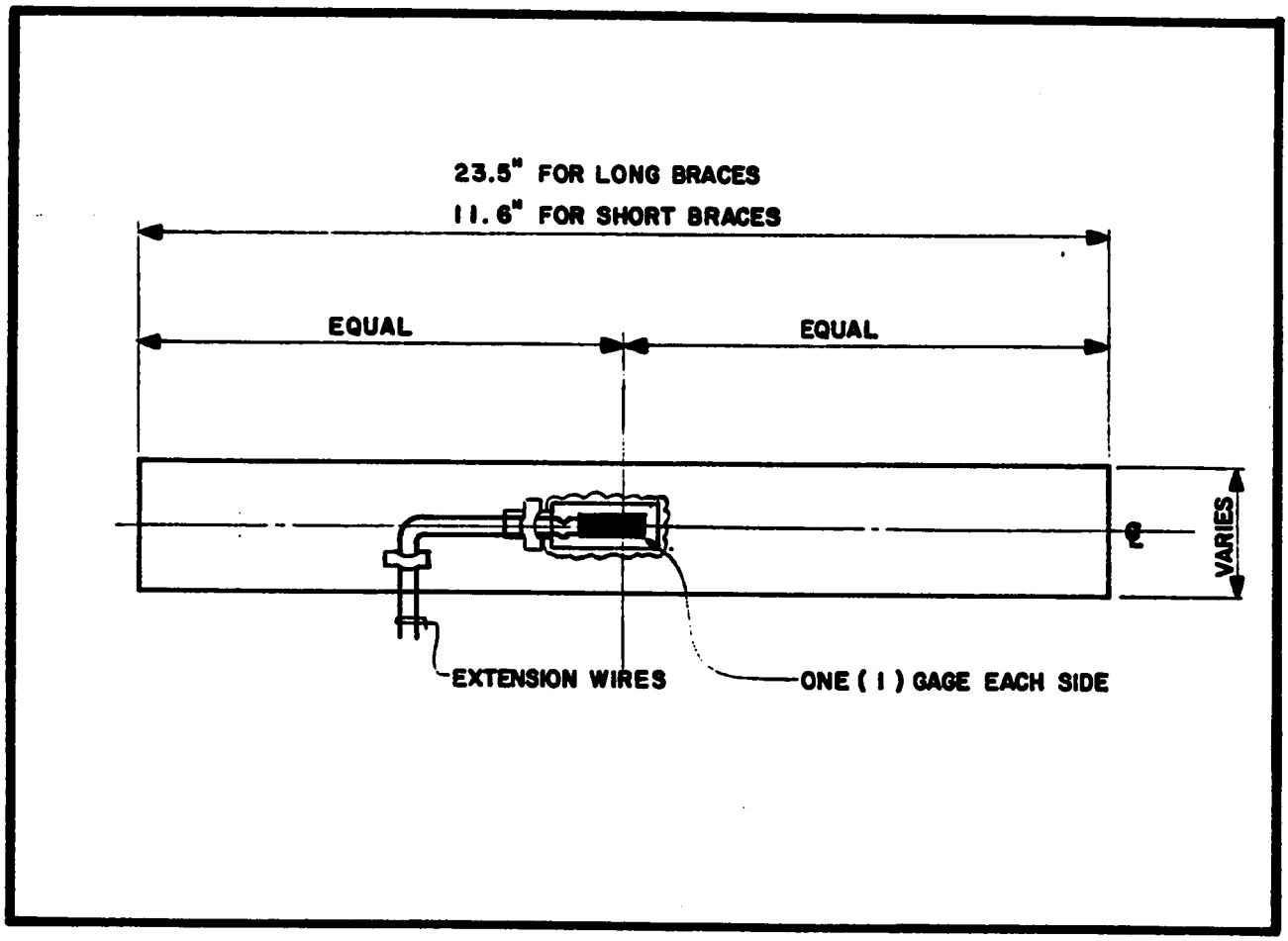

Figure 8 : ARRANGEMENT OF BRACES' STRAIN GAGES

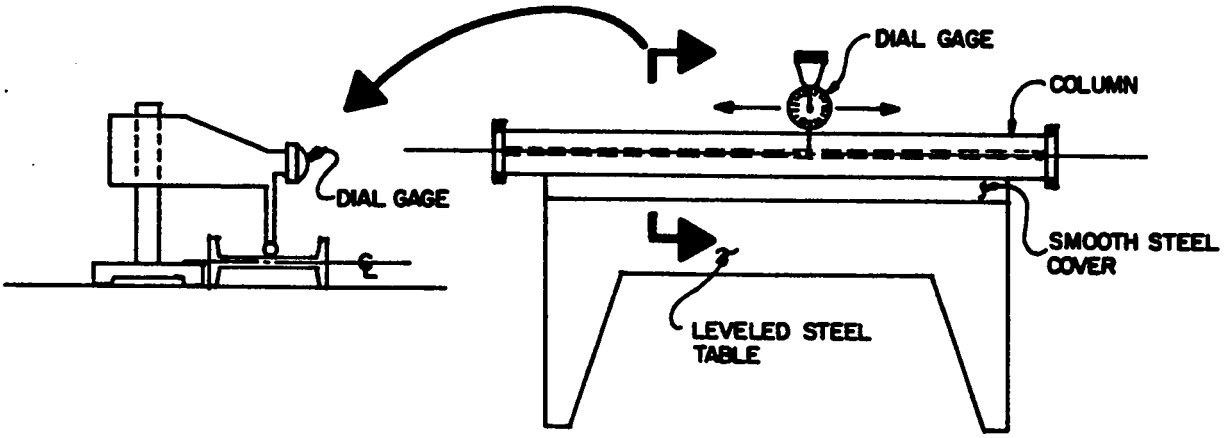

Figure 9 : DETAIL OF INITIAL COLUMN IMPERFECTION MEASUREMENTS

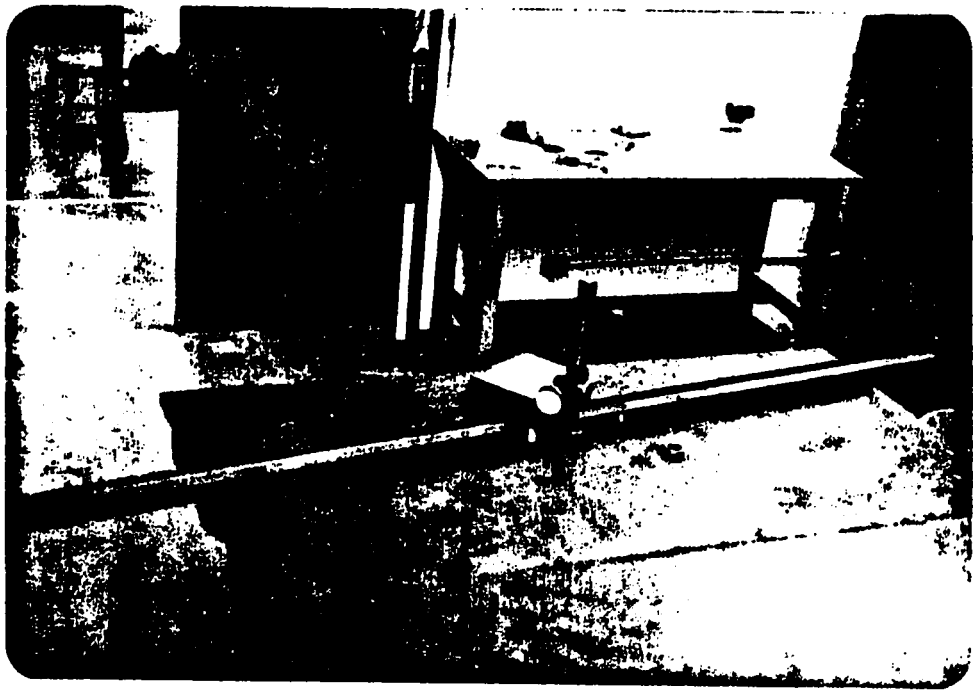

Figure 10 : Arrangement used to measure column's initial imperfection

1) The column was laid down on the table as shown in Figure 10.
2) Readings were taken for 10 cm (approx.) intervals.
3) Soft marking chalk was used for marking these intervals on the center of the web.
4) Dial gage was adjusted to zero at the first interval at one end of the column. Then the dial gage was moved to the next points along the center of the web and the readings were recorded at each point; taking care of the direction of deflection, up(+) or down (-).
5) Step 4 was repeated, starting from the other end.
6) The average of the two readings at each station was taken as the imperfection value of that point.
7) The measured readings were plotted (as shown in Chapter 3 - test results and discussion) to give a clear presentation of the initial shape of each column and its crookedness (out of straightness).

2.2.4 Instrumentation

2.2.4.1 Instruments used for measuring strain values : Two BLH model 1200B portable dial strain indicator and two Model 1225 switching and balancing units (Figure 11) have been used for measuring the strain values in the three braced-column structure. Each (switching and balancing) unit

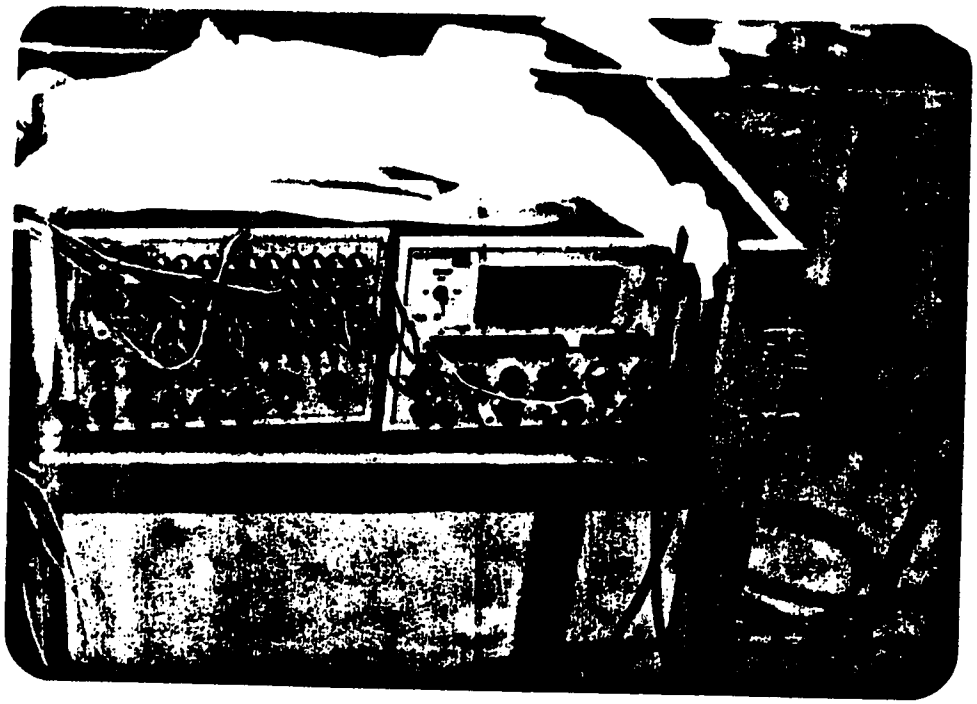

Figure 11 : One set of portable dial strain indicator and (switching and balancing unit), used for measuring strain values.
Note : A total of two sets were used for each experiment

allows a group of ten half bridge outputs to be monitored on one strain indicator.

2.2.4.2 Controlling temperature effect (Three-wire half-bridge) : To cancel the effect of temperature on the gages, a half-bridge circuit was used. The measuring or 'active' gages were mounted on the test specimens and the compensating or 'dummy' gages were mounted on unstressed pieces of the same material.

2.2.4.3 Hydraulic hand jacks and cylinders : Three simple hydraulic hand jacks were used as the loading system. Each jack consists of a pumping section and a cylinder section as shown in Figure 12. Each section is encased in a separate unit and connected with a hydraulic hose and a valve to control and regulate the flow of oil.

Cylinders were of low height type, heavy duty and single acting lifting. They are designed for short stroke and load return operations. Each cylinder had a capacity of 30 ton (67 kip), 62 mm (2 7/16") stroke and 118 mm (4 5/8") collapsed height.

2.2.5 Testing

2.2.5.1 Test preparation : The following were checked before loading :

1) Three columns for each set of experiments were chosen such that each of them had similar shape of

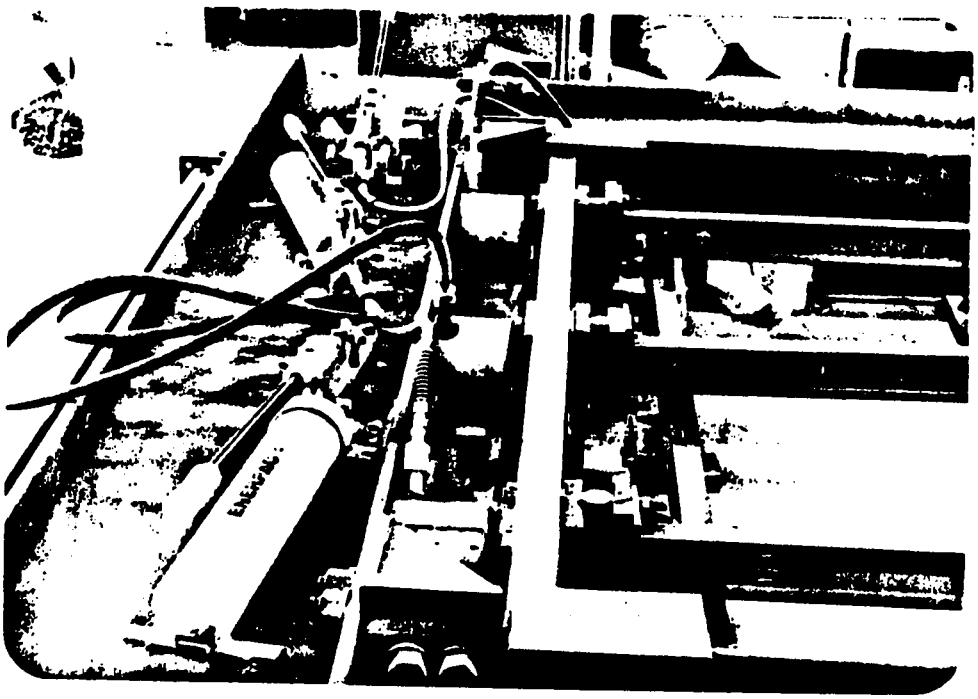

Figure 12 : The loading system; three hydraulic hand jacks and their rams

initial imperfection.

2) Wheneverpossible, the columns were arranged with the initial curvature being on the brace side so that the braces would be subjected to compression, rather than tension.

3) The hinges at column ends were well greased to ensure pin end connection.

4) All columns were leveled horizontally by using a long bubble level to ensure that they were at the same height from the floor level.

5) The ram heads of the hydraulic jacks were centered axially on the column axis to ensure pure axial loading and no bending.

6) Braces were leveled horizontally and then tack welded to the adjacent column web at their desired locations. During welding, care was taken to prevent the damage of web and braces' strain gages due to heat.

7) Each strain gage of the system was connected with a dummy gage for temperature compensation then, both of them were hooked at the strain indicator in a half bridge connection.

8) Now, all the gages were tested on the strain indicator. The gages which were not functioning

properly were replaced.

9) Finally initial strain gage readings were set to zero.

2.2.5.2 Test procedure : The test procedure can be summarized as follows :

1) Loads were applied stepwise till buckling took place.
2) Strain readings for columns and braces were recorded at each loading step.
3) The load increment corresponded to an average increase of 50 micro-strain which represented an increment of load of 1.7 kips. This load increment was reduced to around 20 micro-strain for the last 100 micro-strain for the expected buckling load.
4) At each step, loading in columns were maintained at the same level by checking the strain reading in each column and adjusting the load.
5) The experiment was terminated when one column appeared to buckle. This was observed when the column failed to carry any significant load and the lateral deflection was pronounced. Hence, the corresponding strain values were recorded as the buckling readings.

chapter **3**

TEST RESULTS AND DISCUSSION

3.1 Introduction

The present investigation involves a total of eight experiments. The first experiment is a pilot test for a single unbraced column. The next four experiments are for single interbraced system, while the last three experiments are for double interbraced system. For each type of bracing system the brace stiffness were varied from a high value to smaller values.

Results are presented in tabular and graphical forms. The results of the first experiment (Pilot experiment) consist of a data table for strain readings and the corresponding calculated column axial loads.

The results of each set of experiments for the two braced type (single and double) consist of the following sets of outputs :

(1) Table for brace properties and system layout.

(2) Graph presenting the average experimental axial column load vs. the brace forces at each step of loading.

(3) Graph presenting the average experimental axial column load vs. brace forces as percentages of this axial load.

(4) Another graph presenting the axial column load vs. brace forces as percentages of the theoretical column buckling load.

These last two graphs (percentage graphs) are plotted from computer outputs presented in Appendix F.

Each experiment would be explained, analysed and discussed directly with its set of results. For the purpose of comparison with experimental column loads, the ultimate and allowable loads were calculated by using the allowable compression stress formula given in the AISC Specification[8]. (These calculations are presented in Appendix E).

3.2 Basis for Designing the Experimental Braces

The experimental braces (the long and the short braces) for each experiment were designed to have the same elastic stiffness ($K = \frac{EA}{L}$) in accordance with the following formula :

$$\frac{L_1}{L_2} = \frac{A_1}{A_2} \qquad (3.1)$$

where

L_1 = length of the short brace

L_2 = length of the long brace

A_1 = cross-sectional area for the short brace

A_2 = cross-sectional area for the long brace

These stiffnesses were varied for one experiment to the another.

3.3 Basis for Calculating the Experimental Column and Brace Forces

(1) Forces in columns and braces were evaluated by measuring strain gage values and then applying Hooke's law for uniaxial loading within the linear-elastic ranges as :

$$P = \varepsilon EA \tag{3.2}$$

where

P = force

ε = strain

E = modulus of elasticity

A = cross-sectional area

(2) Strains to be used in the above formula are obtained by averaging the different values of readings given by the number of gages located in different positions on specimen (usually four gages on each experimental column or two gages on each brace, refer to Figures 7 and 8 for typical locations of these gages). Consequently, the calculated forces by Eqn. (3.2), are representing average values of forces.

(3) The axial force of the three column system is taken as the mean average value of the total averages of the three columns.

(4) Tensile tests showed that modulus of elasticity E for both columns and braces can be taken as 29 x 10^6 psi (See Appendix G).

3.4 Results, Analysis and Discussion of Tests

3.4.1 Experiment No.(1) - Pilot Test : Bucling of a Single Unbraced Column

3.4.1.1 Objective : The main objective of this pilot test was to check the system, loading frame and performance of end connections.

3.4.1.2 Behaviour : The column buckled in a perfect half-sign wave failure as expected (See Figures 13 and 14).

3.4.1.3 Analysis and discussion : The buckling occured at a load level of 90% of the theoretical buckling load for a single unbraced column (Table 3). The 10% discripancy is expected due to the initial column imperfections, eccentricities and end connections. Any how, this result gave an encouraging evidence about the accuracy of the system. Besides, it also showed that the designed end connections behaved almost as an ideal hinge.

3.4.2 Experiment No. (2)

3.4.2.1 Behaviour :

(1) Column System : Unfortunately due to some problems in controlling the jacking machines, the buckling occured suddenly thus preventing from recording the readings

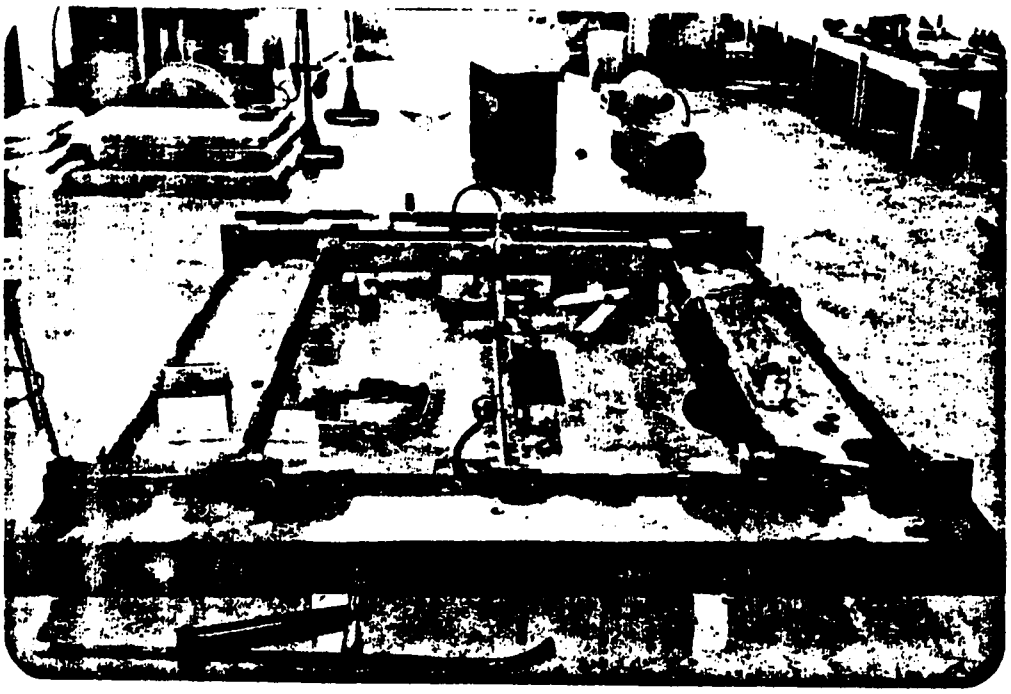

Figure 13 : Column before buckling

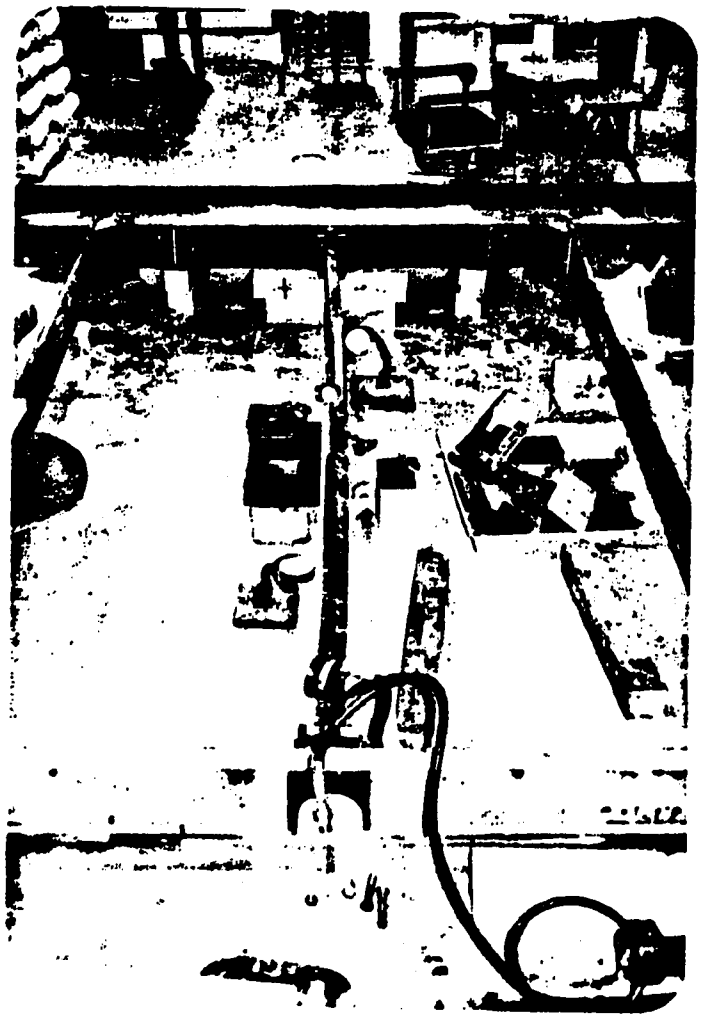

Figure 14 : Column at buckling; half-sign wave failure

TABLE 3 : Column strains and axial loads

Loading Steps	Gage 1 μ in/in	Gage 2 μ in/in	Average Strain μ in/in	Average Axial Load lb	Remarks
1	5	5	5	170	
2	21	19	20	681	
3	30	26	28	953	
4	40	37	39	1327	
5	51	49	50	1701	
6	64	63	64	2178	
7	75	75	75	2552	
8	99	98	99	3369	
9	99	100	100	3403	Buckling

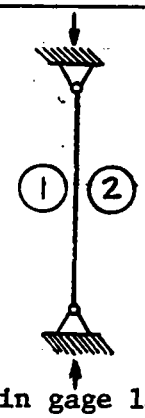

Strain gage layout
○ Gage number and location

$$\frac{P_{cr}\ \text{(experimental)}}{P^*_{cr}\ \text{(theoretical)}}\ \% = 90\%$$

$^*P_{cr}$ (theoretical) = 3.78 kip (Appendix E)

just prior to buckling. Otherwise the columns behaved normal. Column C1 buckled first, then the other two columns buckled later.

(2) Bracing System (For brace properties, See Appendix H - Table 4) : Referring to Figure 15, the behaviour of the bracing system can be summarized as follows :

(i) The three braces were in tension for the first few loading steps.

(ii) When the applied load exceeded the buckling load for the theoretical buckling without a brace (3.78 kip; Appendix E), braces B1 and B2 started gradually to pick-up compression loads, while brace B3 started to loose its tension load.

(iii) When the last reading was recorded, brace B1 was the most loaded brace. At that point, brace B3 lost its tension force and started to pick-up compression loads.

3.4.2.2 <u>Analysis and discussion</u> : The high tension in brace B3 (Fig.15) gave the impression that column C1 had the tendency to pull away from the system. At the same time, the other two columns C2 and C3 seemed to be acting as one system and trying to force column C1 to go to brace side (compression). As a result brace B3 forced to reduce its tension force and go gradually to compression which made brace B1 to become the most loaded brace due to the action of load superposition. The

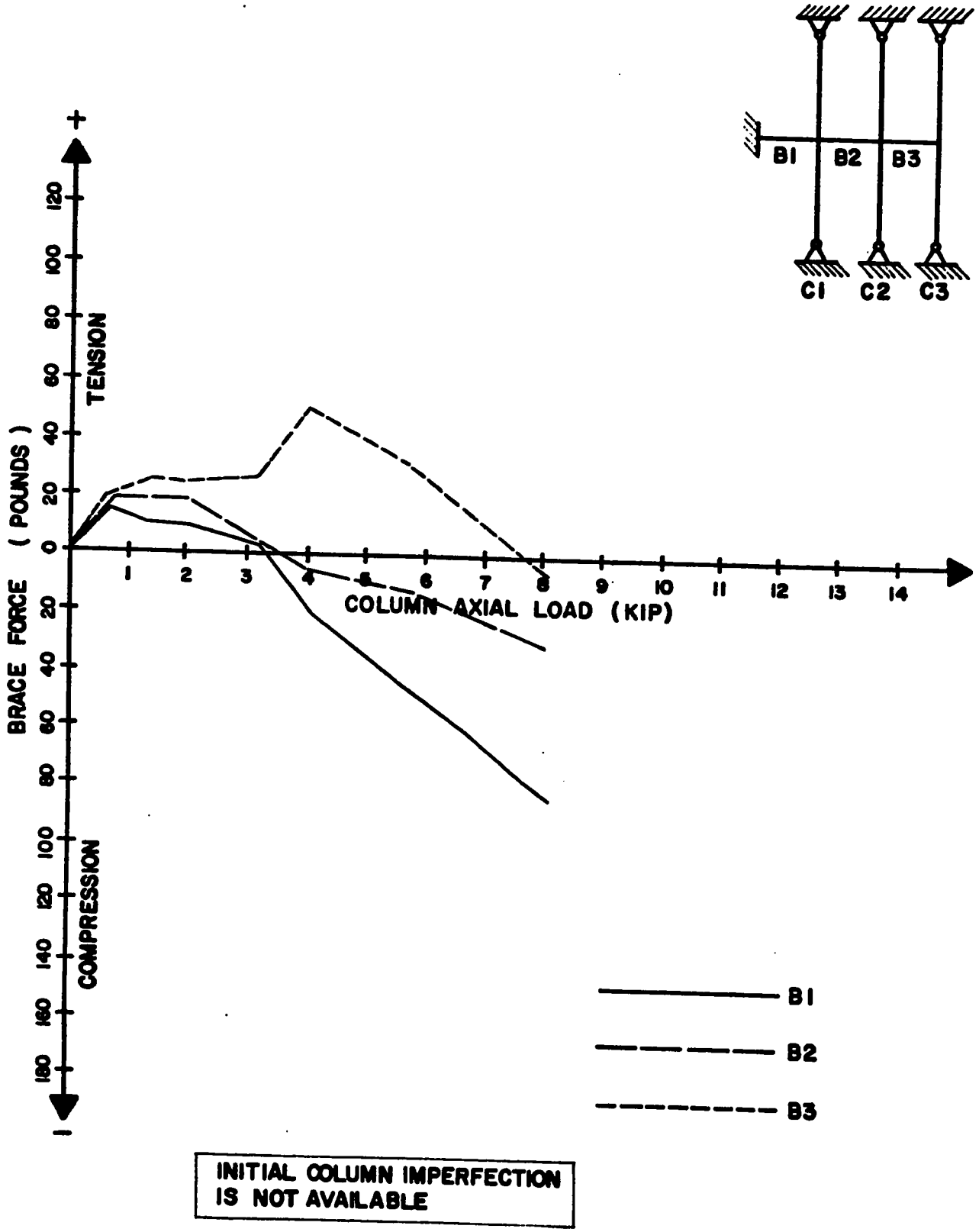

Figure 15 : AVERAGE COLUMN AXIAL LOAD vs. BRACE FORCE

maximum brace force was about 1.03% of the maximum experimental axial load (Figures 16 and 17). Also the maximum axial load recorded (8.23 kip) was almost equal to the allowable load for a single column braced at its mid-height (7.9 kip; Appendix E), which emphasizes the gain in the carrying capacity which can be achieved by introducing small braces.

The attainment of buckling load close to the theoretical value indicated that braces had adequate strength and stiffness.

3.4.3 Experiment No. (3)

3.4.3.1 Behaviour :

(1) Column System : Column C1 buckled first in a two half wave failure - as expected - at a high level of loading. Then the other two columns started to fail as shown in Figures 18 and 19.

(2) Bracing System (For brace properties, See Appendix H - Table 5) : Referring to Figure 20 the main behaviour of the bracing system can be summarized as :

(i) Braces B1 and B3 were in tension.

(ii) Brace B2 was in tension for the first few load increments. Then it started to fluctuate between tension and compression till buckling of the columns took place.

(iii) The brace forces (in three of them) were low tension till the system passed the buckling load without a brace.

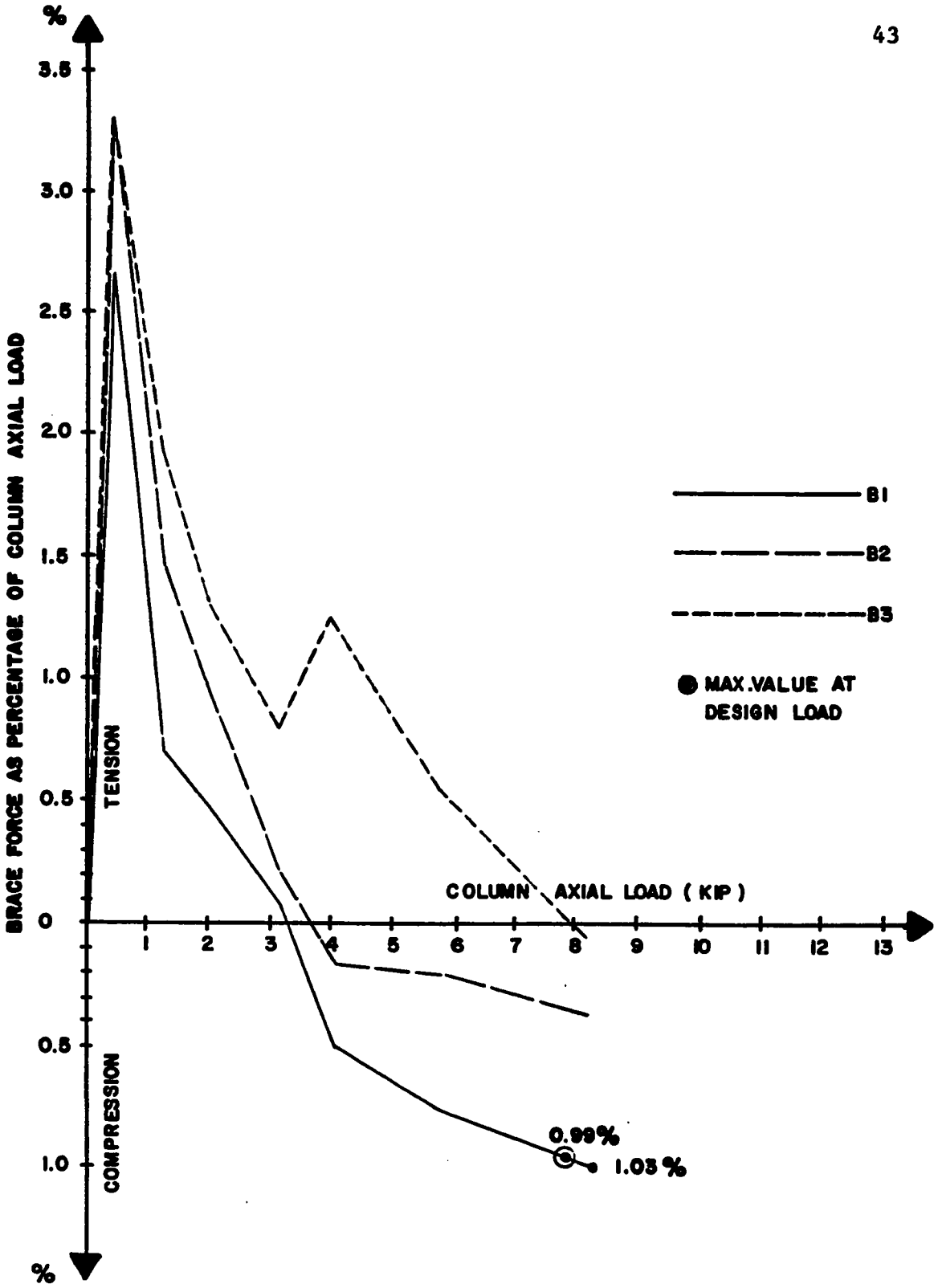

Figure 16 : AVERAGE COLUMN AXIAL LOAD vs. BRACE FORCE AS PERCENTAGE OF THE COLUMN AXIAL LOAD

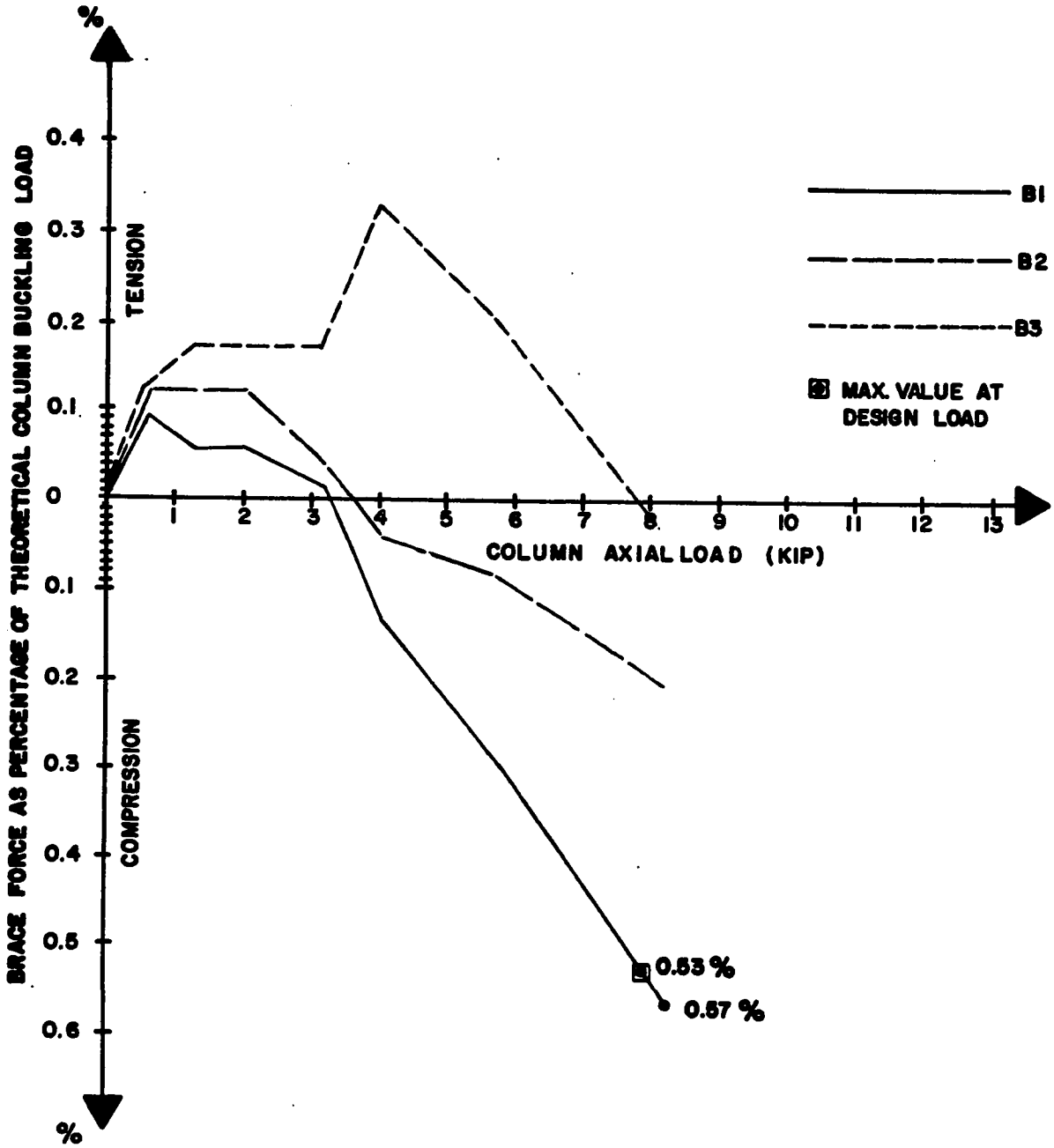

Figure 17 : AVERAGE COLUMN AXIAL LOAD vs. BRACE FORCE AS PERCENTAGE OF THEORETICAL COLUMN BUCKLING LOAD

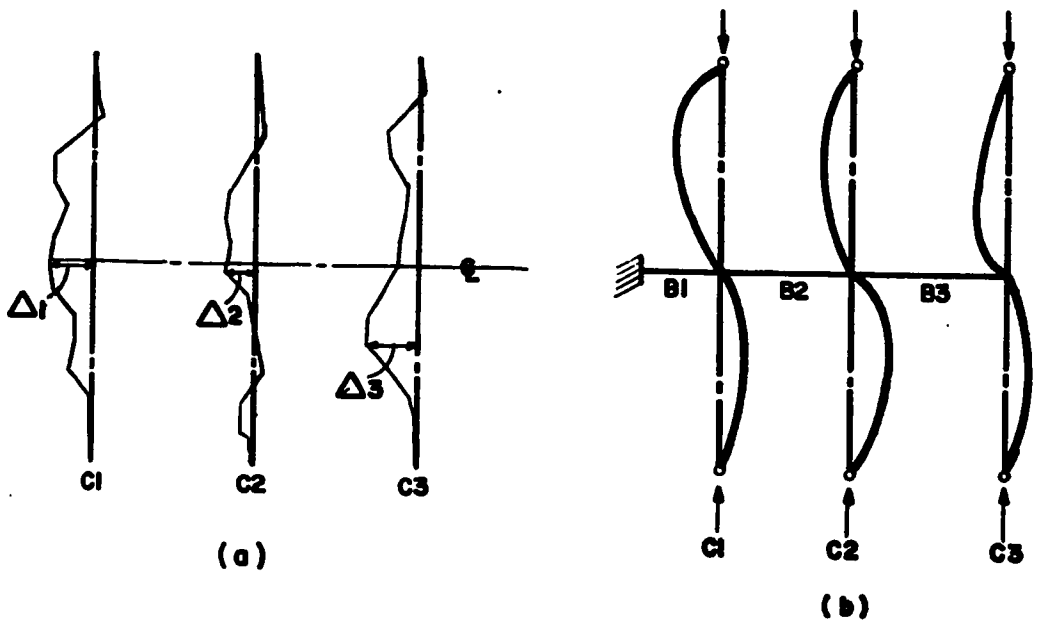

Figure 18 : BUCKLING OF THE SYSTEM (a) INITIAL COLUMN IMPERFECTION; (b) BUCKLING SHAPE OF THE COLUMN SYSTEM

Legend

L = Overall length of column = 106.7", $\frac{L}{1000} = 0.107$

Δ_1 = Maximum initial imperfection in Column C_1 = 0.016", $\frac{\Delta_1}{L} = 0.00015$

Δ_2 = Maximum initial imperfection in Column C_2 = 0.011", $\frac{\Delta_2}{L} = 0.0001$

Δ_3 = Maximum initial imperfection in Column C_3 = 0.02" , $\frac{\Delta_3}{L} = 0.00019$

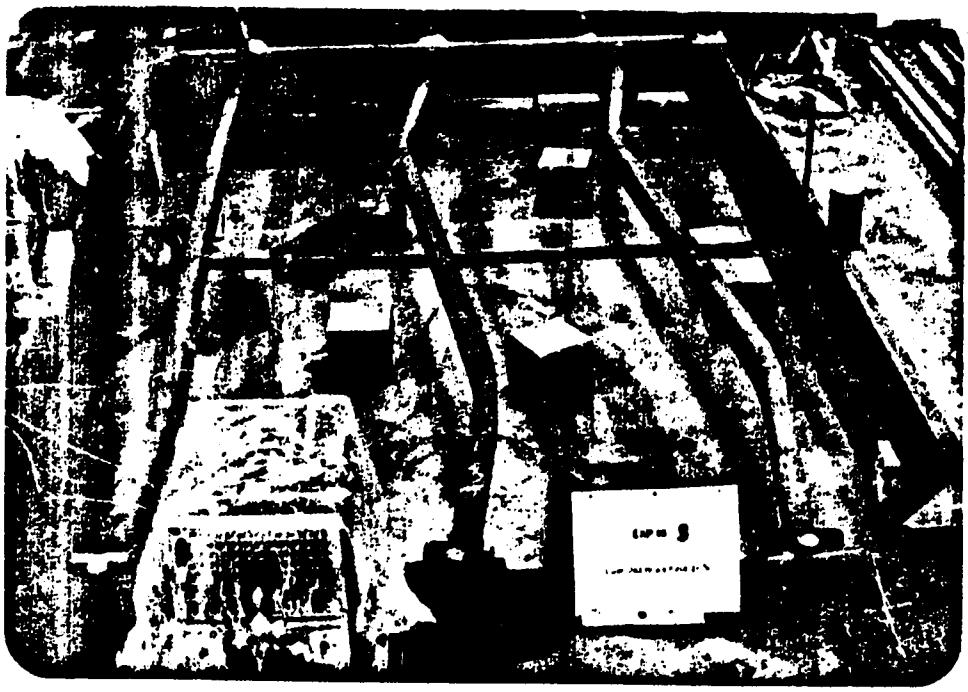

Figure 19 : Buckling shape of the columns

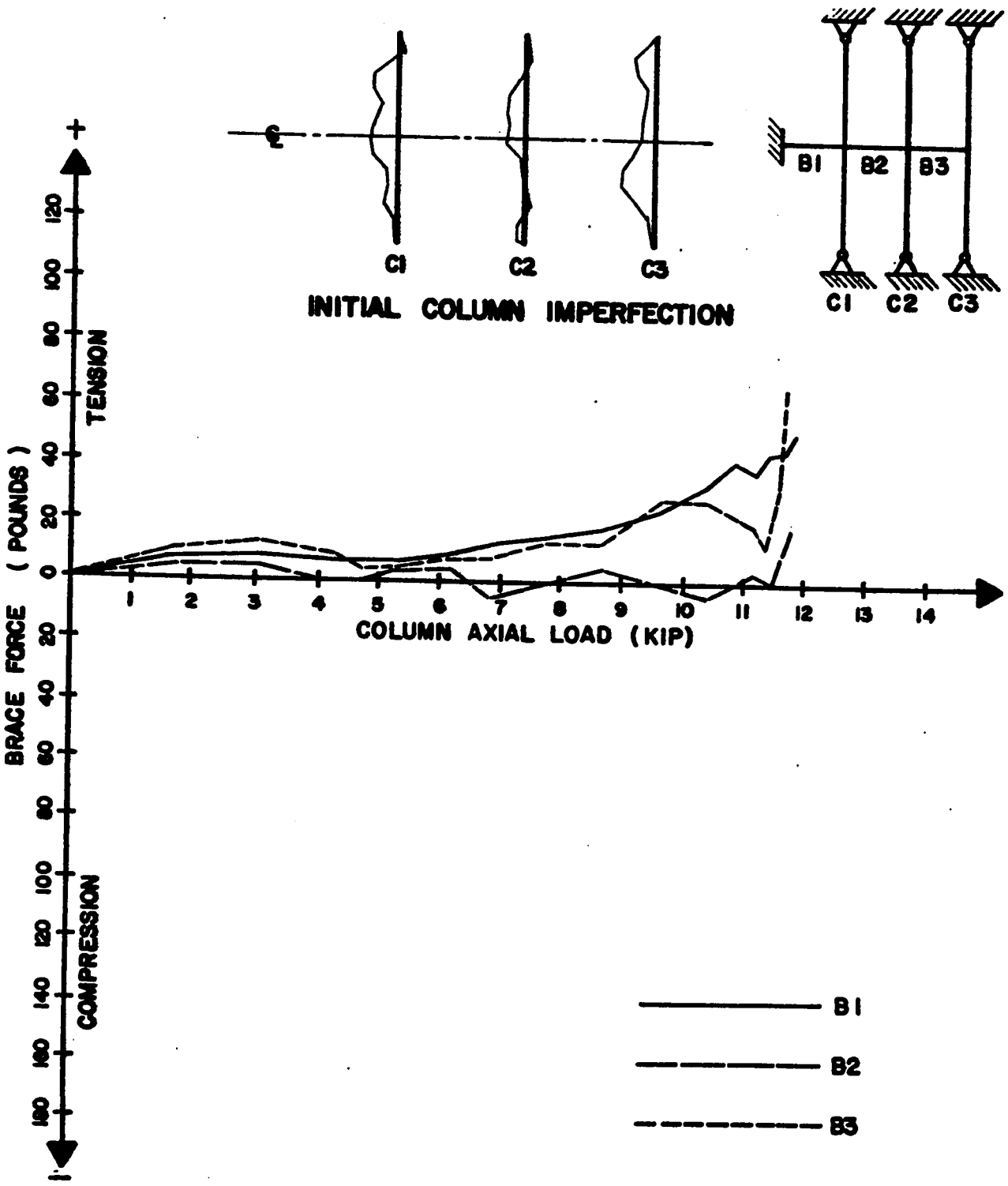

Figure 20 : AVERAGE COLUMN AXIAL LOAD vs. BRACE FORCE

(iv) When the applied load crossed the theoretical buckling load with no brace (3.78 kip; Appendix E), tension in braces B1 and B3 increased gradually with almost the same rate.
However, the forces in brace B2 were fluctuating between compression and tension-with a relatively small amount of brace forces.

(v) A rapid increase in the brace forces-in all three braces-was clearly noted at buckling.

3.4.3.2 Analysis and discussion : The low fluctuating force in brace B2 and at the same time the high tension forces in both braces B1 and B3 (Figure 20) gave the impression that both columns C1 and C3 (Figure 20) were trying to pull away from the system in a right hand side direction while column C2 stayed almost nutral at its position. This behaviour of column C2 gives a good example of the expected behaviour of ideal columns having negligible amount of initial imperfections. These columns usually seem to produce the minimum bracing forces for the achievement of full bracing condition (as column C2 nearly did). Refer to Figure 18 for initial column imperfection layout.

The system in general gave good results. The buckling occurred at a level of load equal to 78% of the theoretical buckling load for a single column braced at its mid-height

(15.13 kip; Appendix E). Hence it could carry a load (11.83 kip) equal to about three times of that one single unbraced column can carry alone theoretically (3.78 kip; Appendix E).

The brace forces were also relatively low (Figure 20), the maximum brace force at buckling being of the order of 0.56% of the experimental buckling load (on brace B3, Figures 21 and 22). Also at the allowable design load (7.9 kip, Appendix E) the maximum brace force was at 0.22% of that load (Figure 21).

One of the interesting results of this experiment is the effect of the initial imperfections at the column ends. Even though the three columns were laid down in a manner that would yield compression in braces, all braces -- specially braces B1 and B3 - were in tension. This gives an evidence about how the end imperfections can influence the overall behaviour of the bracing system. Nevertheless, the relatively low forces in the braces indicated that the effect of these small end imperfections may not be critical. For such a large scale test experiments it is not easy to control small imperfections. The cause of such an imperfection might be mainly due to the inaccurate orientation or fixing of the end plates. Also any small eccentricity or deviation between the axis of the column and the jack rams

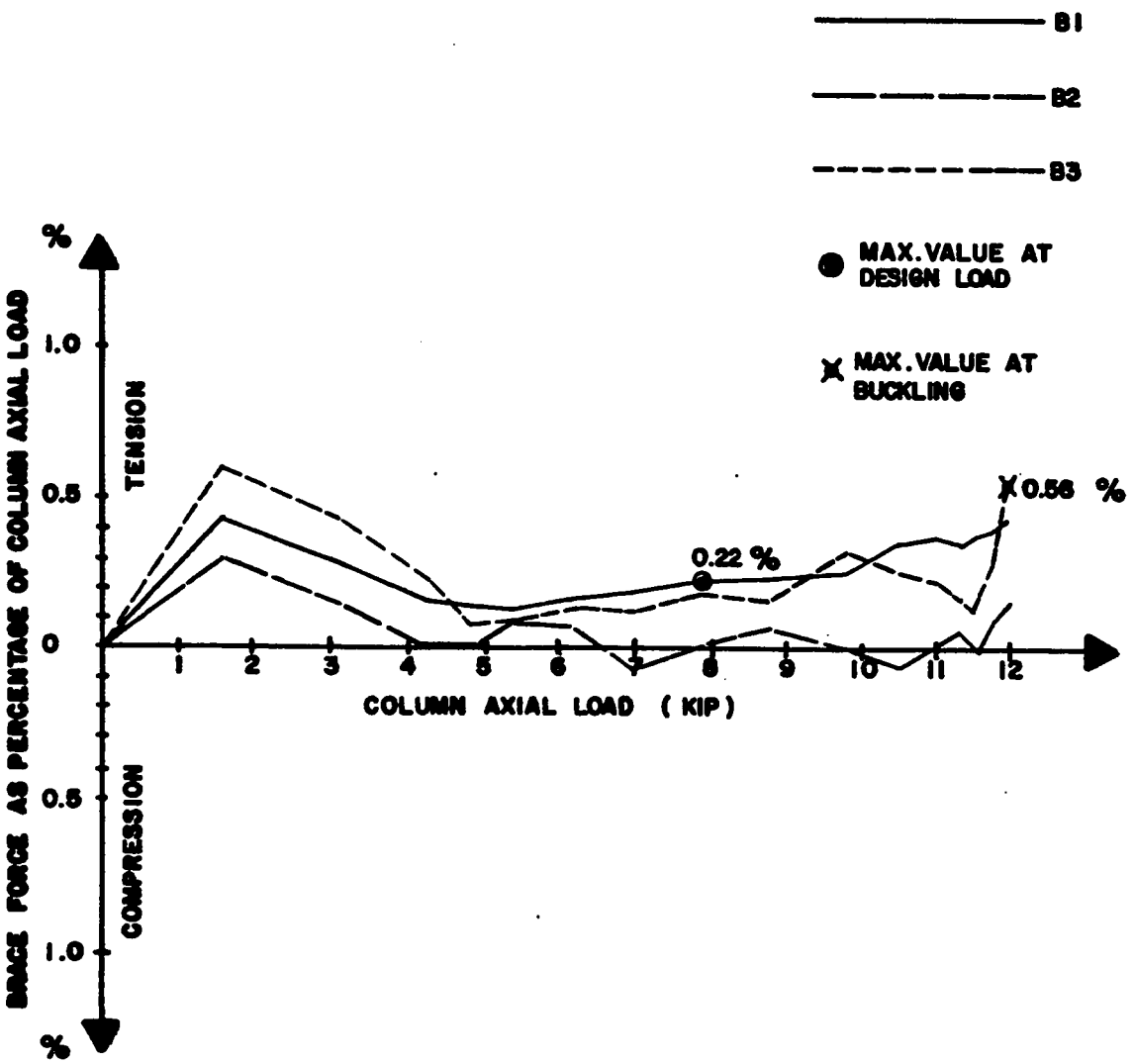

Figure 21 : AVERAGE COLUMN AXIAL LOAD vs. BRACE FORCE AS PERCENTAGE OF THE COLUMN AXIAL LOAD

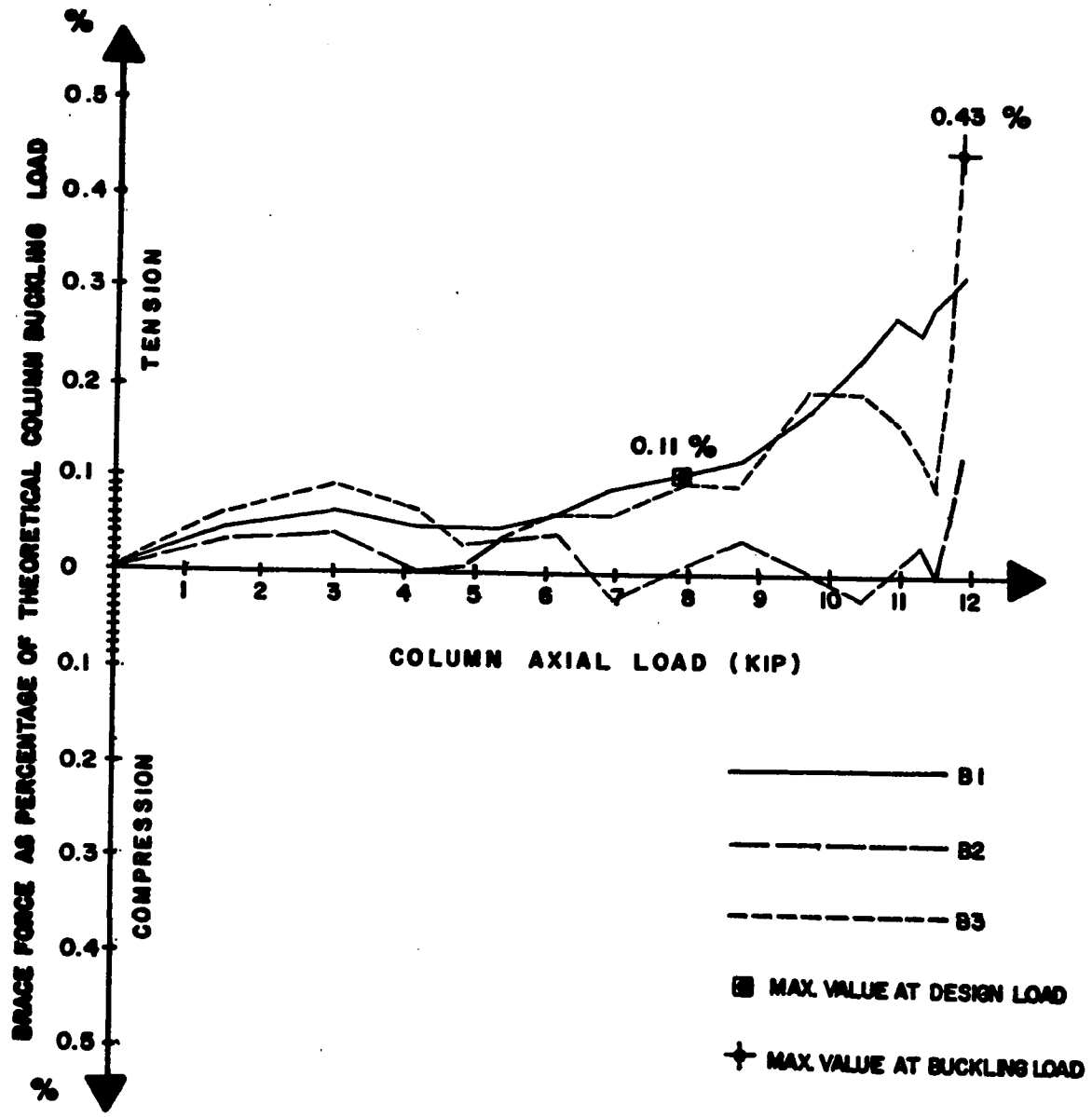

Figure 22 : AVERAGE COLUMN AXIAL LOAD vs. BRACE FORCE AS PERCENTAGE OF THEORETICAL COLUMN BUCKLING LOAD

can cause such a behaviour. Anyhow such an experiment reflects a practical case which is expected to occur in actual construction. The results indicated that it is not a critical case as long as the initial imperfections are reasonably small.

The rigidity and strength of the braces were adequate to produce full bracing (columns buckled in a two half-wave failure) which encouraged to go for small brace stiffness.

3.4.4 Experiment No. (4)

3.4.4.1 Behaviour :

(1) Column System : The column system performed better than the other two previous experiments where the three columns almost buckled together at a higher level of loading. The buckling occured in perfect two half-waves as shown in Figures 23 and 24.

(2) Bracing System (For brace properties, See Appendix H-Table 6):Referring to Figure 25, the behaviour of the bracing system can be summarized as follows :

(i) All braces were in compression.

(ii) The behaviour of all braces were more or less the same. While the rate of increment of forces in B2 and B3 were almost identical, that for B1 was less.

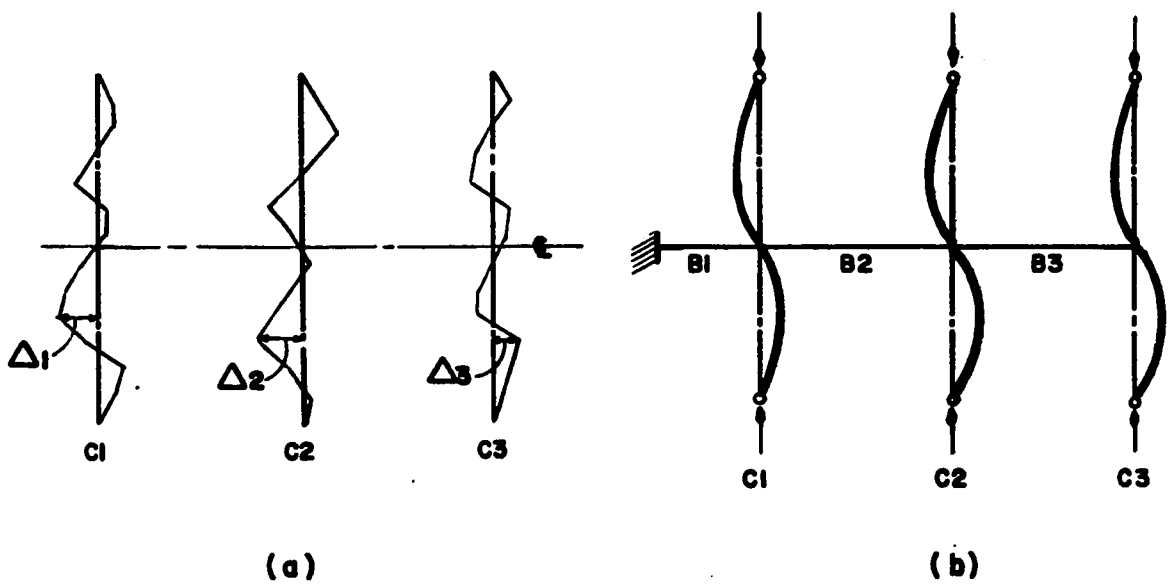

Figure 23 : BUCKLING OF THE SYSTEM ;(a) INITIAL COLUMN IMPERFECTION ;(b) BUCKLING SHAPE OF THE COLUMN SYSTEM

<u>Legend</u>

L = Overall length of Column = 106.7", $\frac{L}{1000} = 0.107$

Δ_1 = Maximum initial imperfection in Column C_1 = 0.016", $\frac{\Delta_1}{L} = 0.00015$

Δ_2 = Maximum initial imperfection in Column C_2 = 0.017", $\frac{\Delta_2}{L} = 0.00016$

Δ_3 = Maximum initial imperfection in Column C_3 = 0.01[illegible]", $\frac{\Delta_3}{L} = 0.000094$

Figure 24 : Buckling shape of the columns

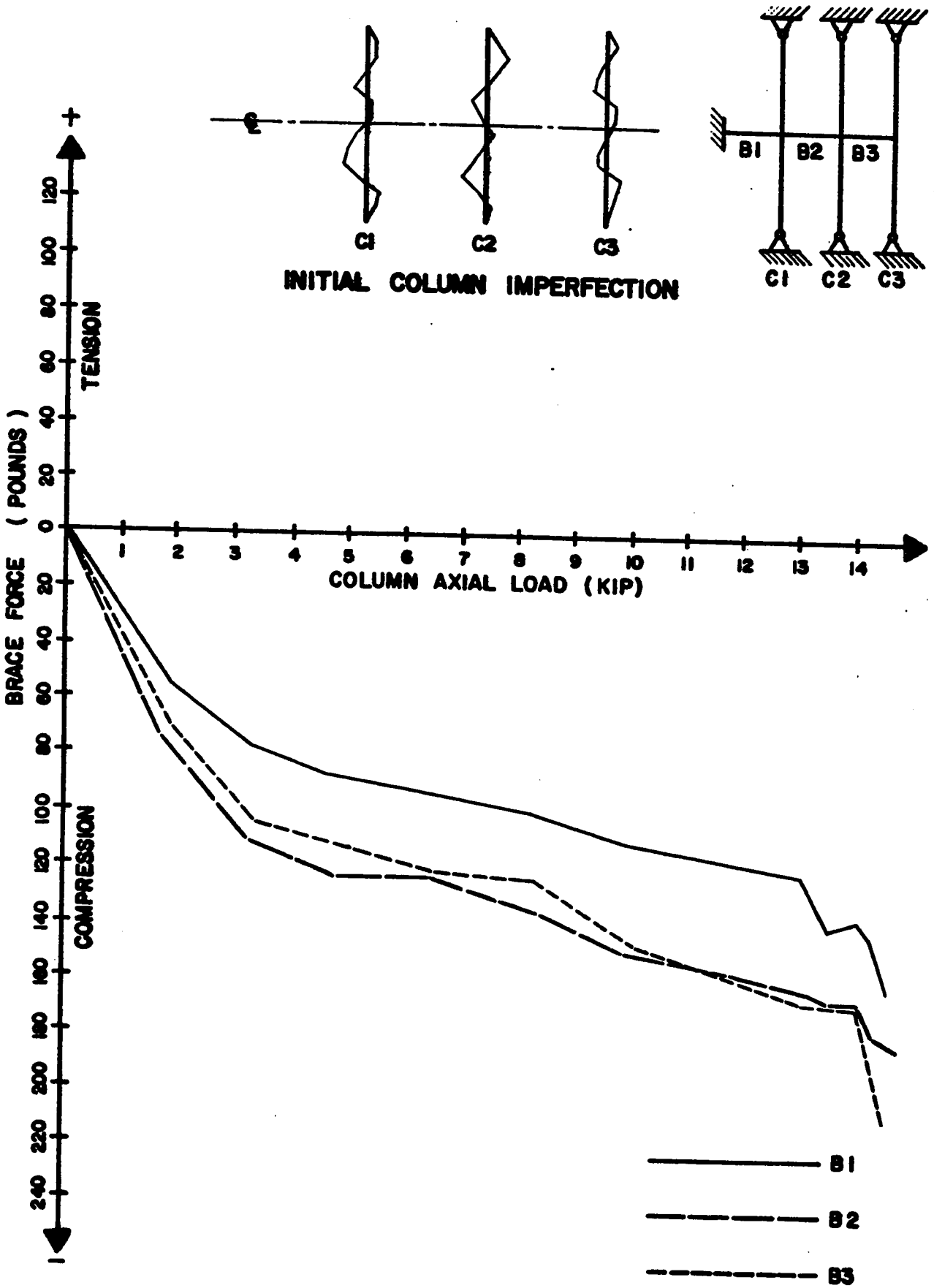

Figure 25 : AVERAGE COLUMN AXIAL LOAD vs. BRACE FORCE

(iii) All brace forces were of higher values than those recorded in the previous two experiments.

(iv) A rapid increase in the brace forces - in all three braces - was clearly noted at buckling.

3.4.4.2 Analysis and discussion : The increase in the carrying capacity of the columns was significant. Each column could carry a load (14.78 kip) equal to about 3.9 times that one single unbraced column can carry alone theoretically (3.78 kip; Appendix E). Hence buckling occured at a level of load equal to 97.7% of the theoretical buckling load for a single column braced at its mid-height (15.13 kip; Appendix E). The small initial columns' imperfections and similarity in the initial imperfection shapes of the three columns (Figure 23) contributes to this relatively high level of columns' carrying load.

The increase in the brace forces was expected hence the braces were of less strength and rigidity (Table 6) than those used in the previous experiments (Tables 4 and 5). Not only that, but also once the carrying capacity increased then directly more loads are expected to be transferred to the bracing system.

The maximum brace force recorded at buckling was of the order of 1.42% of the experimental buckling load (on brace B3; refer to Figures 26 and 27). Also the brace forces in the other two braces were close to the maximum value. At the

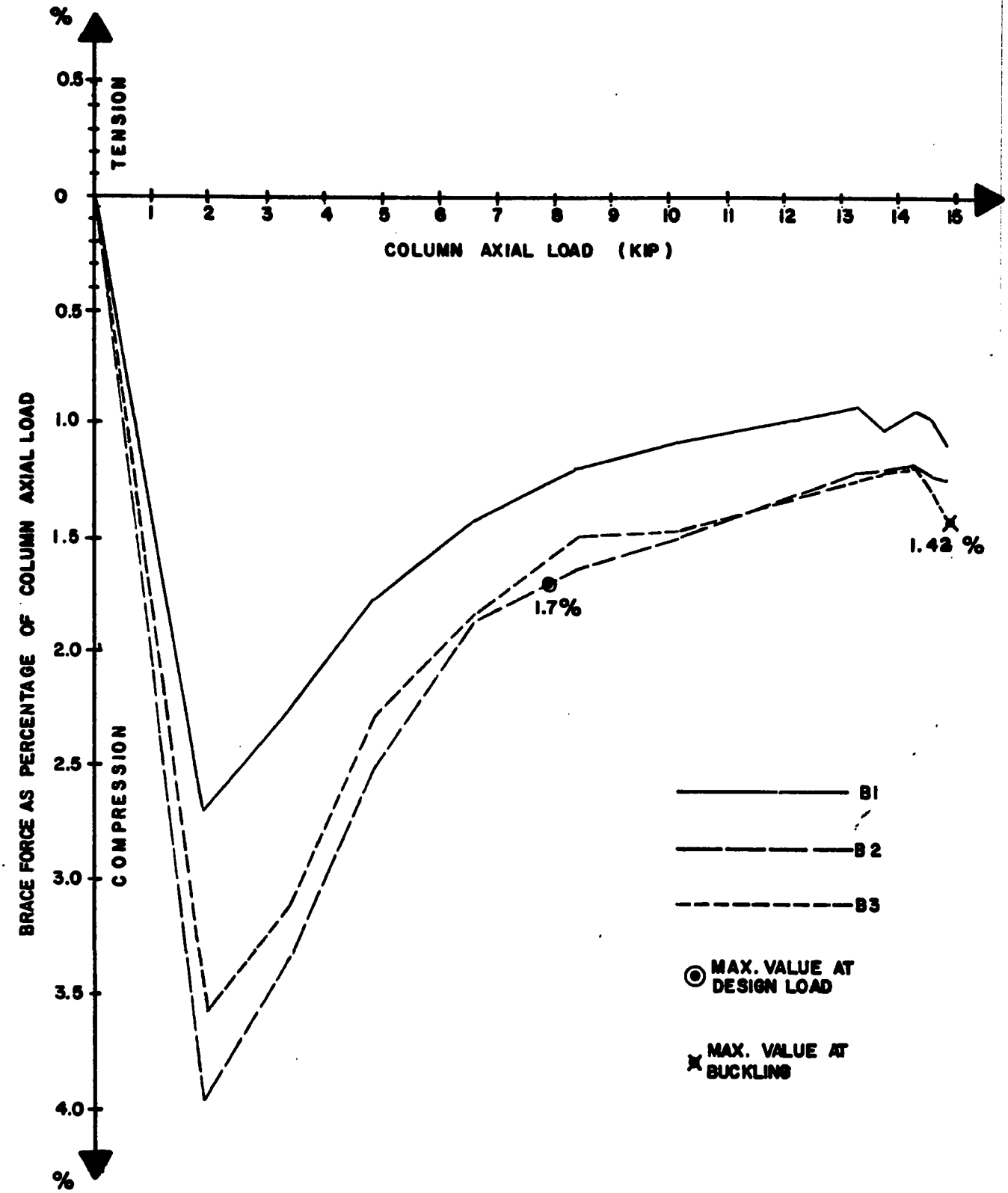

Figure 26 : AVERAGE COLUMN AXIAL LOAD vs. BRACE FORCE AS PERCENTAGE OF THE COLUMN AXIAL LOAD

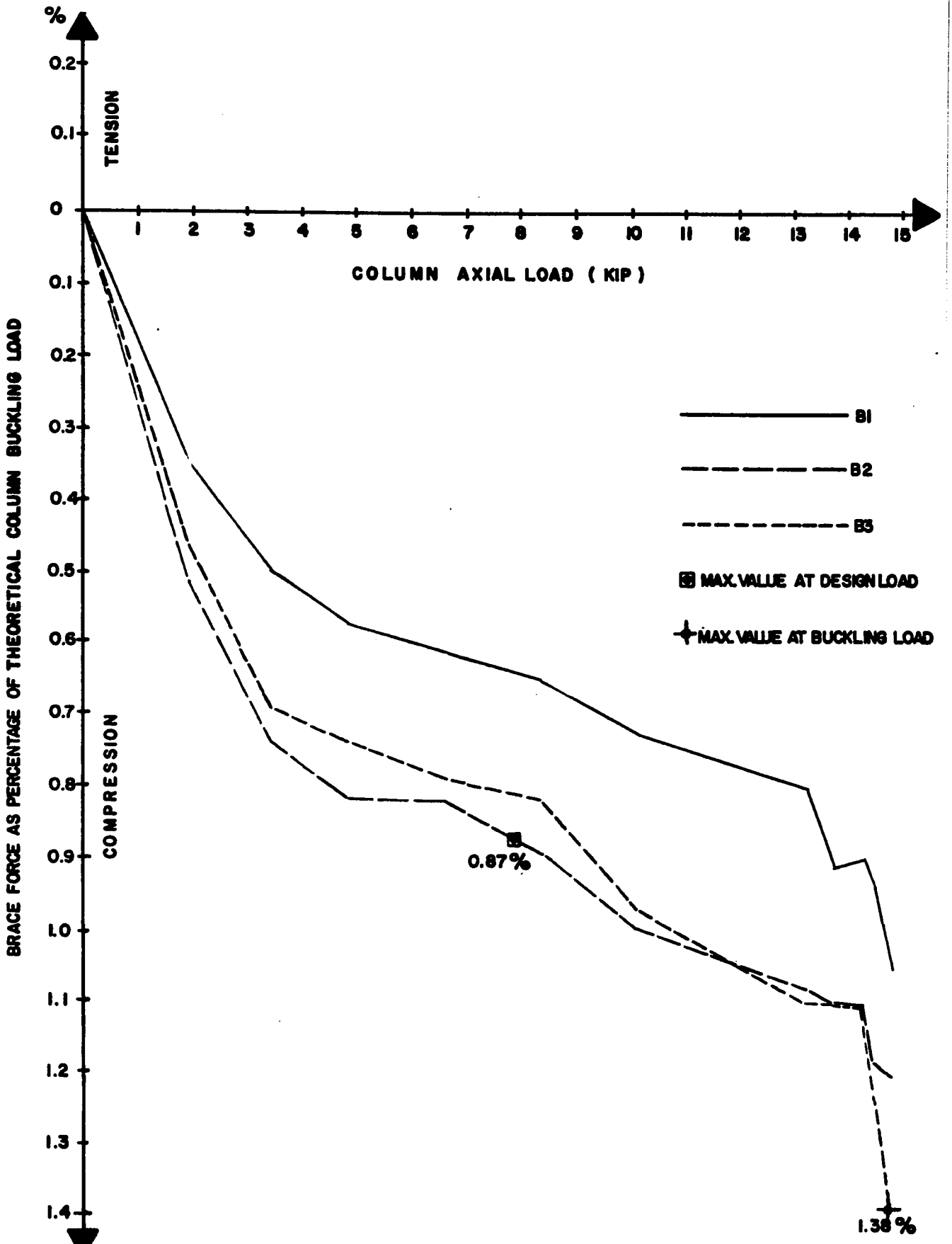

Figure 27 : AVERAGE COLUMN AXIAL LOAD vs. BRACE FORCE AS PERCENTAGE OF THEORETICAL COLUMN BUCKLING LOAD

allowable load (7.9 kip, Appendix E) the maximum brace force was 1.7% of that load (Figure 26).

One of the interesting points in this experiment is the effect of using welding for the attachment of the braces to the columns. Welding connections usually provide some end fixity to the braces which in return increase their carrying capacity. For example, in this experiment, each brace was designed as a simply supported compression member which could carry an ultimate load of 196 lb. (Table 6). But due to the partial end fixity provided by the welding, brace B3 could carry safely a load of 210 lb. as shown in Figure 25.

As a whole the bracing system was adequate and capable to produce full bracing to the column system. Thus it was apparent that braces having lower rigidity and strength can be used.

3.4.5 Experiment No. (5)

3.4.5.1 Behaviour :

(1) Column System : Column C2 buckled first at a reasonably high level of loading. Then the other two columns started to buckle as shown in Figures 28 and 29. The buckling shape was in perfect two half-wave failure.

(2) Bracing System (For brace properties : See Appendix H, Table 7) : Referring to Figure 30 the behaviour of the bracing system can be summarized as :

(i) Brace B1 was in compression for the first loading step then changed to tension.

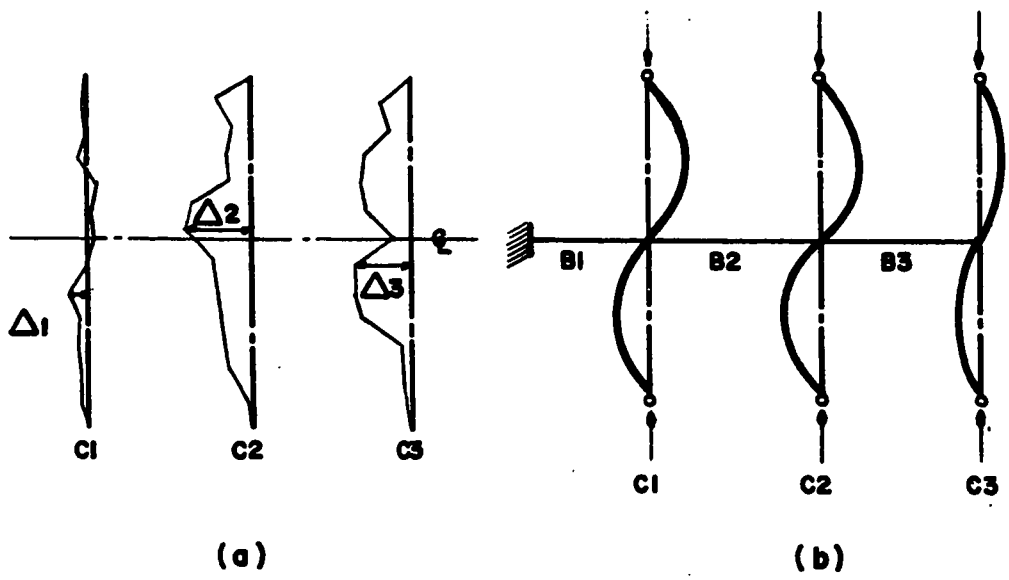

Figure 28: BUCKLING OF THE SYSTEM; (a) INITIAL COLUMN IMPERFECTION; (b) BUCKLING SHAPE OF THE COLUMN SYSTEM

Legend

L = Overall length of column = 106.7", $\frac{L}{1000} = 0.107$

Δ_1 = Maximum initial imperfection in Column C_1 = 0.007", $\frac{\Delta_1}{L} = 0.00007$

Δ_2 = Maximum initial imperfection in Column C_2 = 0.024", $\frac{\Delta_2}{L} = 0.00022$

Δ_3 = Maximum initial imperfection in Column C_3 = 0.02", $\frac{\Delta_3}{L} = 0.00019$

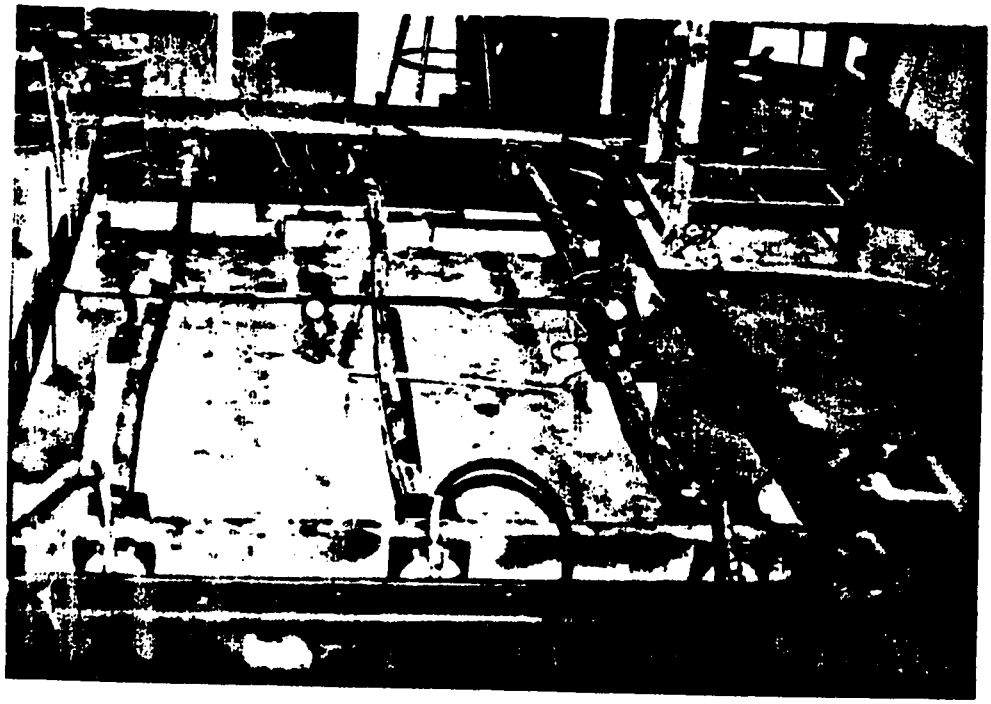

Figure 29 : Buckling shape of the columns

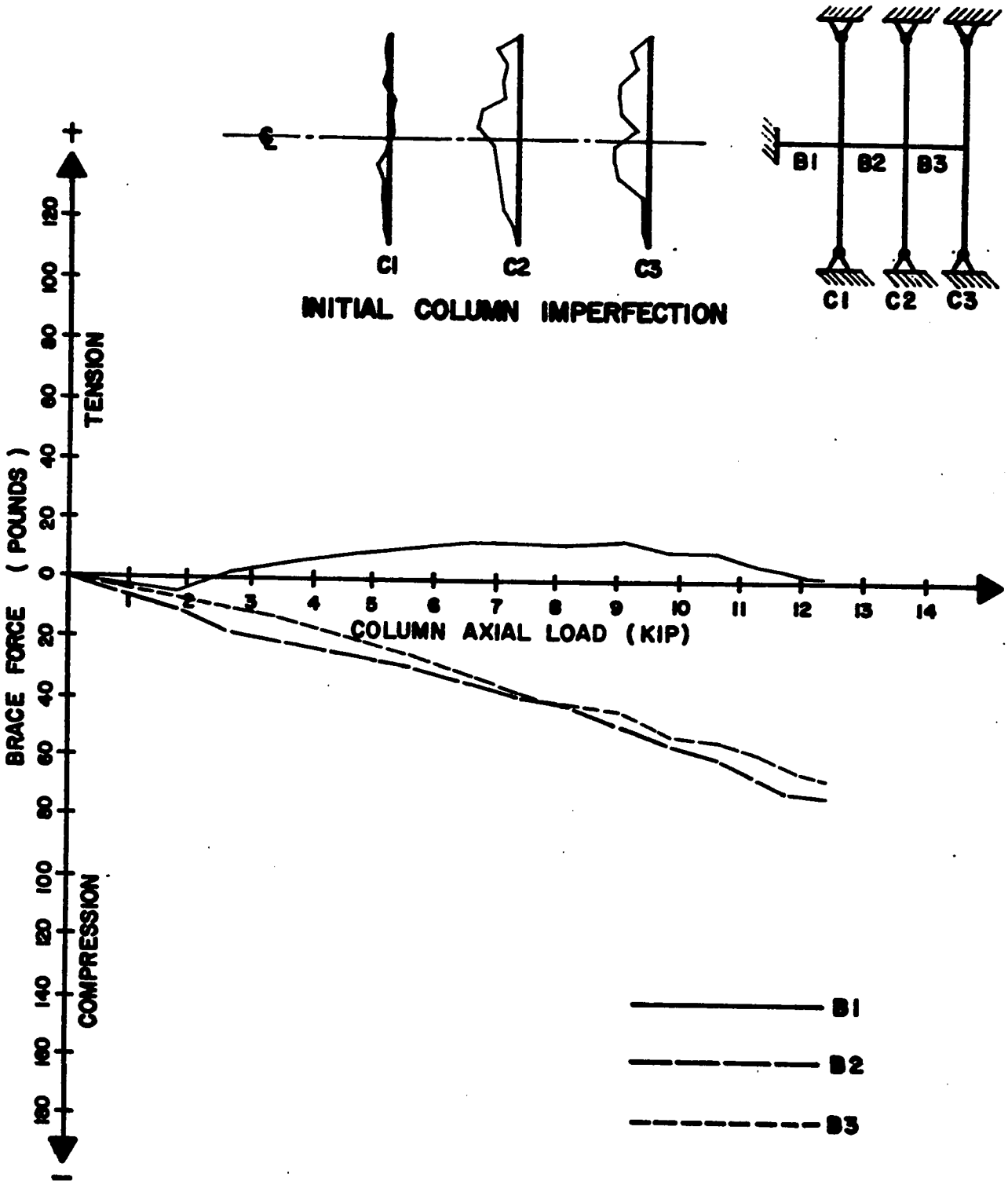

Figure 30 : AVERAGE COLUMN AXIAL LOAD vs. BRACE FORCE

(ii) Braces B2 and B3 were in compression.

(iii) Braces B2 and B3 were having almost the same rate of loading and their behaviour was similar.

(iv) Forces in brace B1 were relatively small specially at buckling where it dropped to almost zero.

(v) Forces in braces B2 and B3 were greater than those of brace B1.

3.4.5.2 Analysis and discussion : The column system carried a relatively high load as it buckled at a load equal to 82.4% of the theoretical buckling load for a single column braced at its mid-height, which is equal to about 3.3 times that one single unbraced column can carry alone theoretically. This buckling load (12.47 kip) is a little less than the buckling load recorded in the previous experiment (Exp. No.4) but a bit higher than that load carried by experiment No. 3.

Brace forces were relatively small specially when compared with those recorded from the previous experiment. The maximum brace force was about 0.55% of the experimental buckling load (on brace B2; Figures 31 and 32). Also at the allowable load (7.9 kip; Appendix E) the maximum brace force was 0.49% of that load (Figure 31). The cause for such smaller forces can possibly be explained, even though it is hard to give an exact answer, by the following two

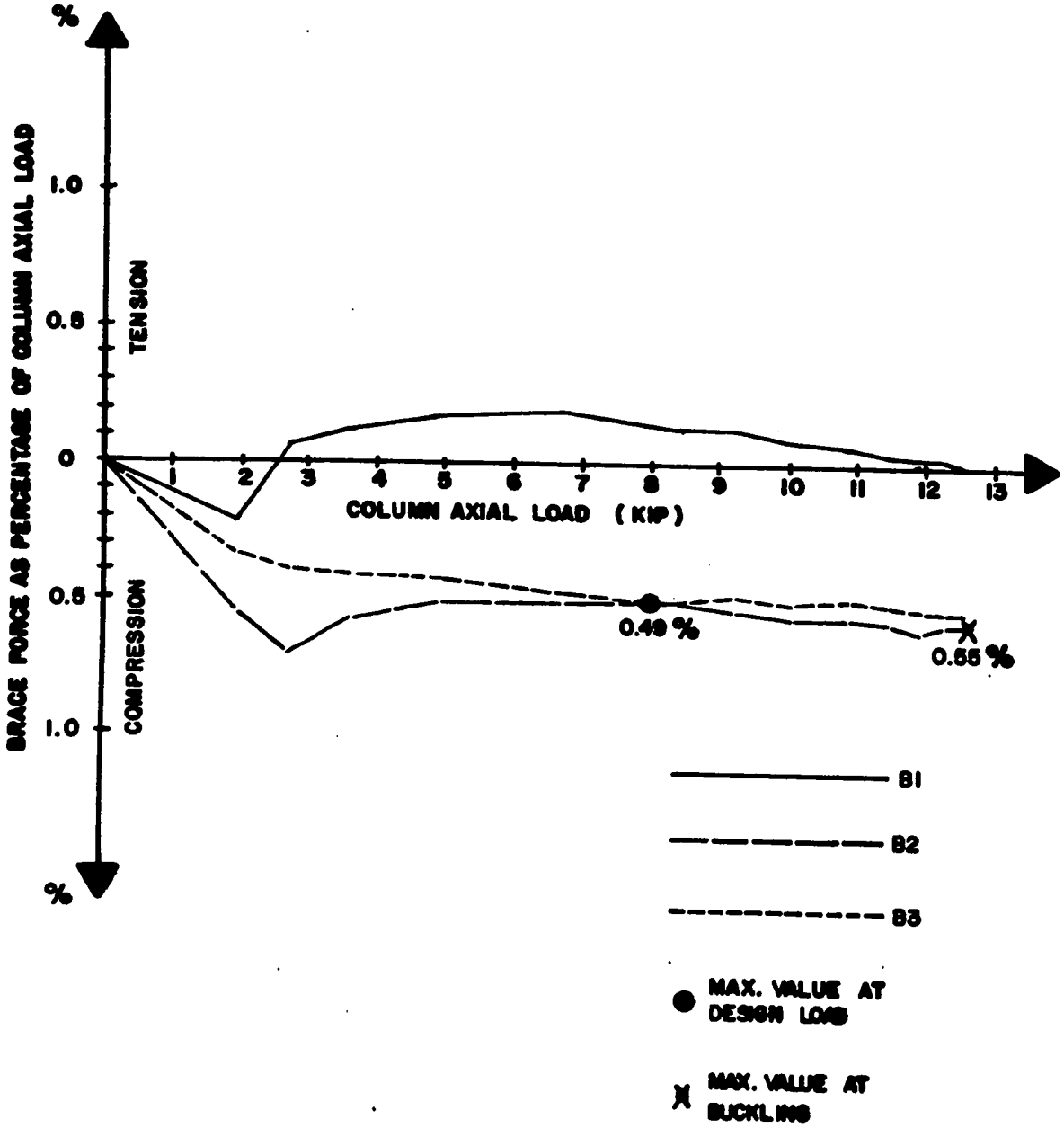

Figure 31 : AVERAGE COLUMN AXIAL LOAD vs. BRACE FORCE AS PERCENTAGE OF THE COLUMN AXIAL LOAD

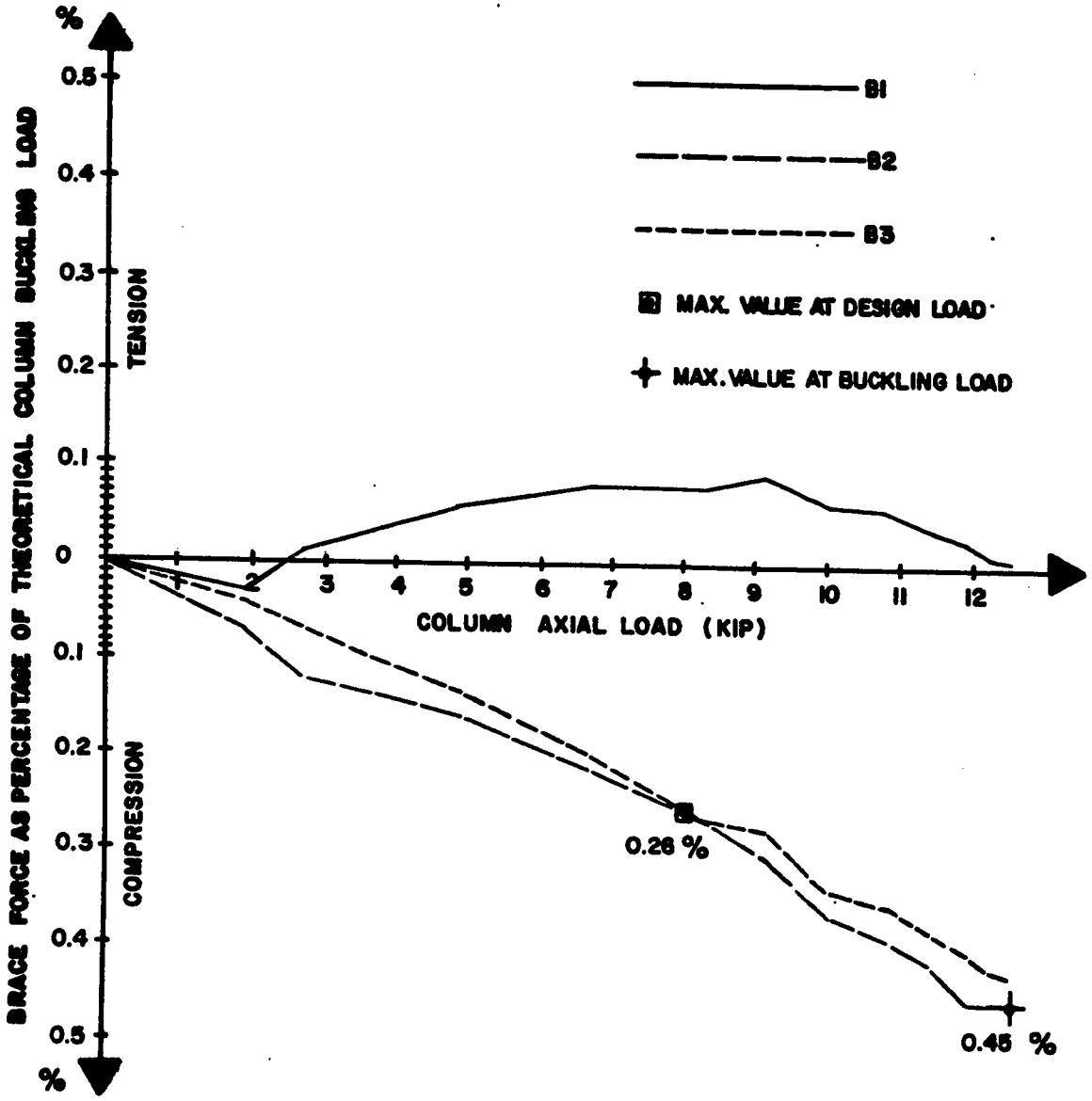

Figure 32 : AVERAGE COLUMN AXIAL LOAD vs. BRACE FORCE AS PERCENTAGE OF THEORETICAL COLUMN BUCKLING LOAD

reasons :

(1) The initial column imperfections were relatively small, specially for column C1 as shown in Figure.28. Therefore the brace forces are expected to be small specially for brace B1.

(2) The small tension in brace B1 (Figure 30) gives the impression that column C1 had the tendency to pull away to produce tension in braces while the other two columns were pushing towards the opposite direction (braces B2 and B3 were in compression - Figure 30). Therefore the forces appeared on brace B1 were the resultant of these two opposite sign actions, which expected to be smaller than if all the forces were of the same sign of action.

Even though the braces were practically of realtively small rigidity and strength (Table 7) they were adequate to produce full bracing to the system. This means that it is possible to go for smaller braces. But it is not practical to go for smaller braces where there will be no enough space for welding and attachment.

3.4.6 Experiment No. (6)

3.4.6.1 Behaviour :

(1) Column System : This experiment had been performed by loading two columns only (Column C2 and C3, See

Figure 33). It was advisable to unload and exclude column C1 when it showed a kind of inconvenient deflection along its strong axis just a few loading steps after the starting of the loading. The two column system can serve the same objectives and requirements of the investigation.

The column system performed normally till column C2 started to buckle and then follow directly by the buckling of Column C3. The buckling was in three half-wave failure shape as shown in Figures 33 and 34.

(2) Bracing System (For brace properties, See Appendix H - Table 8) : Referring to Figure 35, the behaviour of the top bracing line (B) can be summarized as :

(i) Braces B1 and B2 were in compression.

(ii) Brace B3 was most of the experiment under tension and it changed to compression just near buckling.

(iii) The behaviour of all three braces were more or less the same. While the rate of increment of forces in B1 and B2 were almost identical, that for B3 were less.

(iv) At buckling, the forces in all braces increased rapidly and considerably (due to the columns' post buckling behaviour).

Referring to Figure 36, the behaviour of the bottom bracing line (B') can be summarized as :

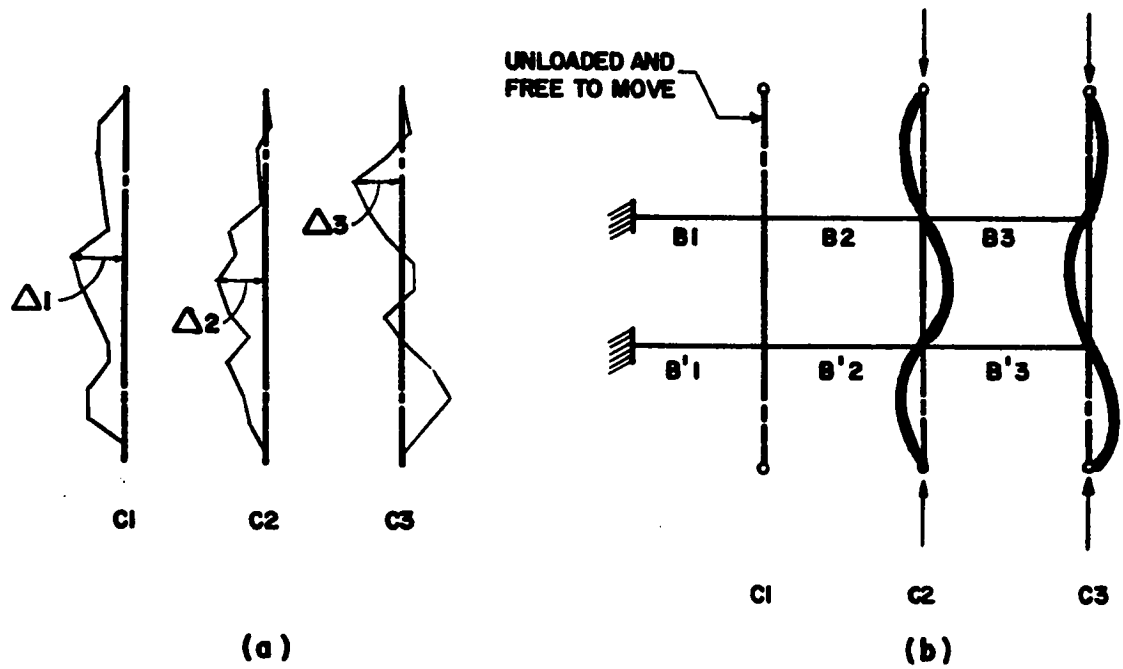

Figure 33 : BUCKLING OF THE SYSTEM ; (a) INITIAL COLUMN IMPERFECTION ; (b) BUCKLING SHAPE OF THE COLUMN SYSTEM

NOTE : ONLY TWO COLUMNS WERE LOADED

Legend

L = Overall length of column = 106.7", $\frac{L}{1000} = 0.107$

Δ_1 = Maximum initial imperfection in Column C_1 = 0.02", $\frac{\Delta_1}{L} = 0.00019$

Δ_2 = Maximum initial imperfection in Column C_2 = 0.019" $\frac{\Delta_2}{L} = 0.00018$

Δ_3 Maximum initial imperfection in Column C_3 = 0.019", $\frac{\Delta_3}{L} = 0.00018$

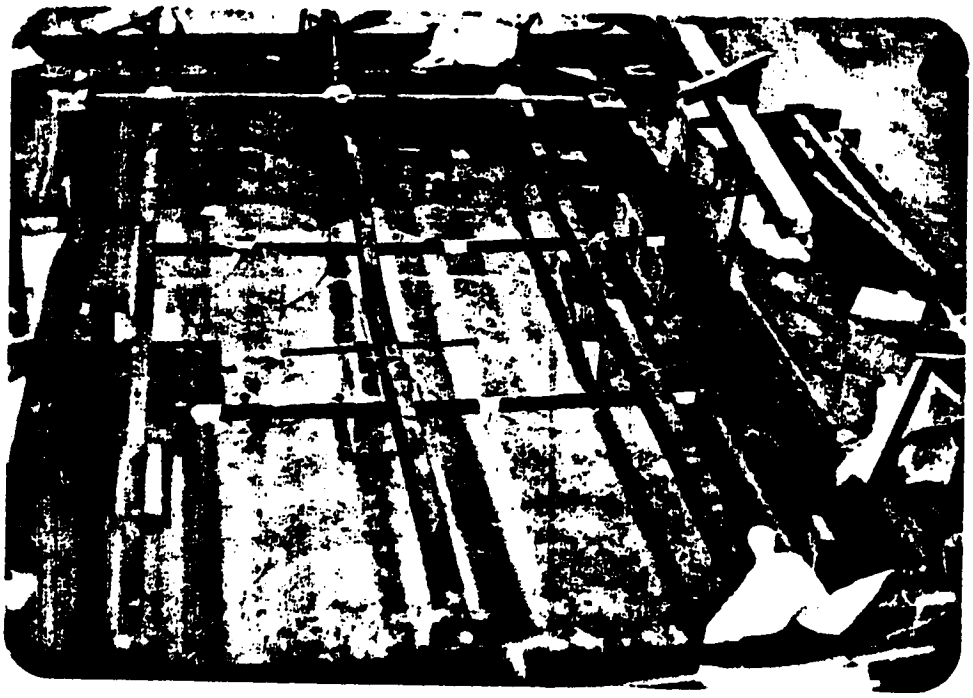

Figure 34 : Buckling shape of the columns

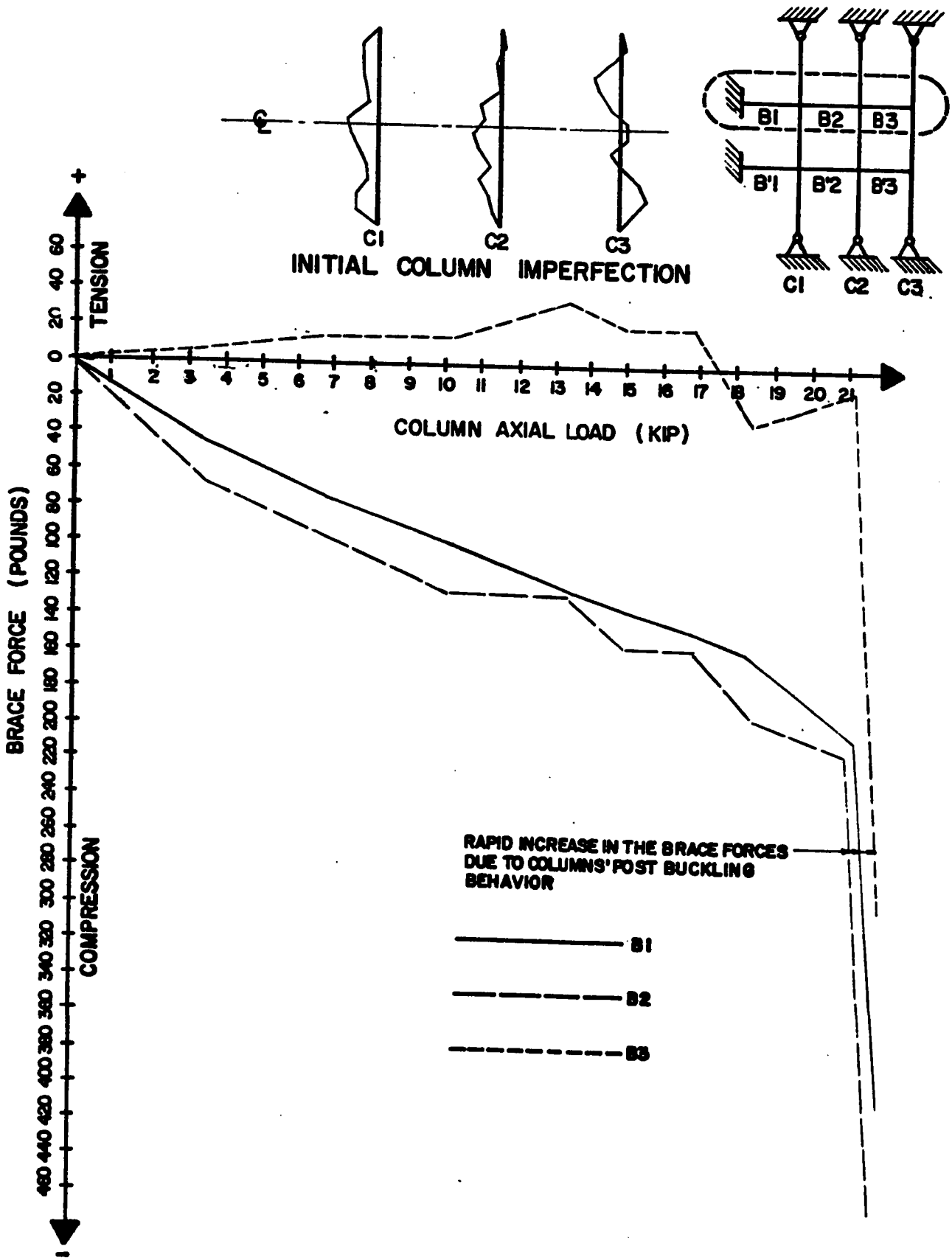

Figure 38 : AVERAGE COLUMN AXIAL LOAD vs. BRACE FORCE

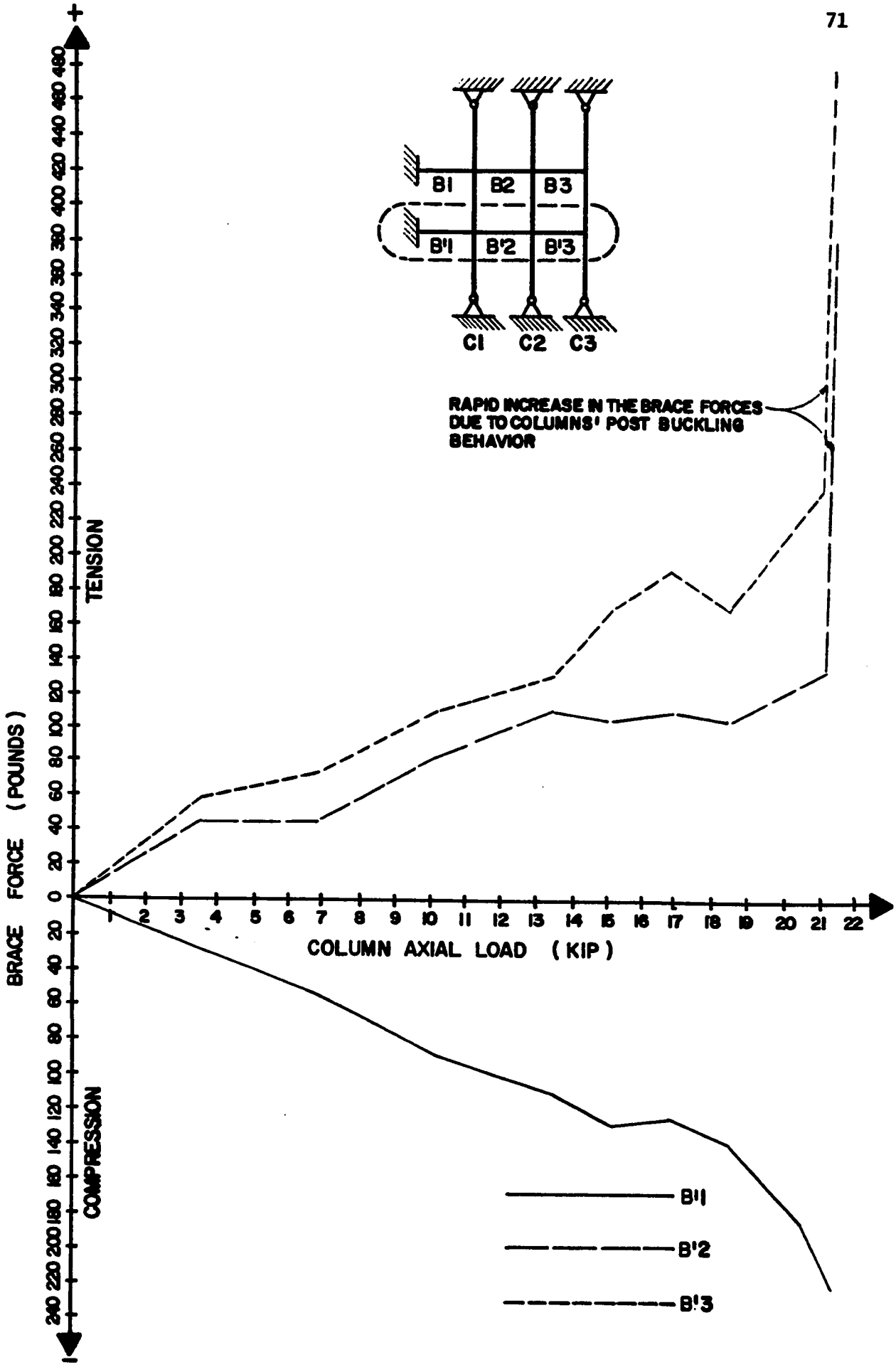

Figure 36 : AVERAGE COLUMN AXIAL LOAD vs. BRACE FORCE

(i) Braces B'2 and B'3 were in tension.

(ii) Brace B'1 was in compression.

(iii) Braces B'2 and B'3 were having almost the same rate of loading and their behaviour was similar.

(iv) Compression forces in brace B'1 were of similar magnitudes of tension forces in braces B'2 and B'3.

(v) At buckling, the forces in braces B'2 and B'3 increased rapidly and considerably (due to the columns' post buckling behaviour), while such an increase was less on brace B'1.

3.4.6.2 Analysis and discussion : The gain in the columns' carrying capacity was relatively high and considerable. The column system buckled at a level of loading (21.01 kip) equal to about 72% of the theoretical buckling load for a single column braced at each one-third length (29.13 kip; Appendix E). This means that the system could carry a load equal to about 5.6 times that one single unbraced column can carry alone theoretically (3.78 kip; Appendix E). The gain in the carrying capacity achieved by the column system of this experiment (72% of theoretical value) consider high. The 28% discrepancy is primarily due to the effect of the residual stresses* which at high level of loading reduce

* Residual stresses are formed in structural members as a plastic deformation due to cooling after hot-rolling or welding, or due to fabrication operations such as flame-cutting. These stresses are existing in the cross section even before the application of an external load. In rolled shapes, these deformations always occur during the process of cooling. The flange tips of a wide-flange shape would cool more rapidly than the junction of flange and web. The average compressive residual stress at the flange tips of small to medium size shapes is about 13 ksi for ASTM-A36 structural carbon steel.

the column carrying capacity significantly. Besides, the effect of the initial imperfections eccentricities and end connections which also contribute towards this discrepancy.

The maximum brace force was of 1.18% of the experimental buckling load (on brace B'3; see Figures 37, 38, 39 and 40 for brace force percentages). Also the maximum brace force at the allowable load (15.34 kip; Appendix E) was 1.11% of that load (Figure 38).

In general the bracing system was adequate and capable to produce full bracing to the column system. Thus it was apparent that braces having lower strength and rigidity can be used.

3.4.7 Experiment No. (7)

3.4.7.1 Behaviour :

(1) Column System : The column system buckled at a higher level of loading than that of the previous experiment (Exp.6). Column C1 buckled first then the other two columns started to buckle as shown in Figure 41.

(2) Bracing System (For brace properties, See Appendix H, Table 9) : Referring to Figure 42, the behaviour of the top bracing line (B) can be summarized as follows :

(i) Braces B1 and B2 were in compression for the first few load increments then changed to tension.

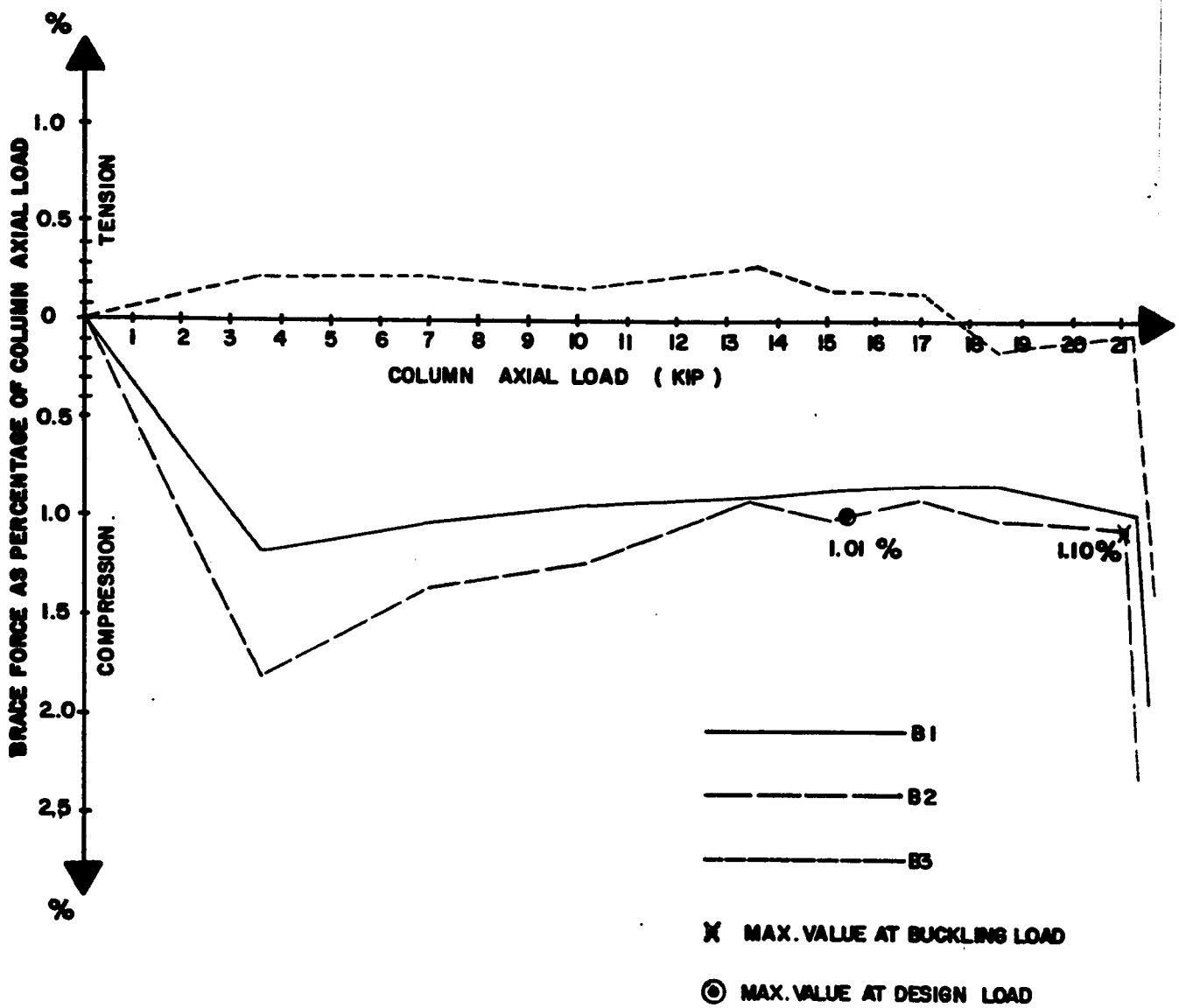

Figure 37 : AVERAGE COLUMN AXIAL LOAD vs. BRACE FORCE AS PERCENTAGE OF THE COLUMN AXIAL LOAD - TOP BRACE LINE

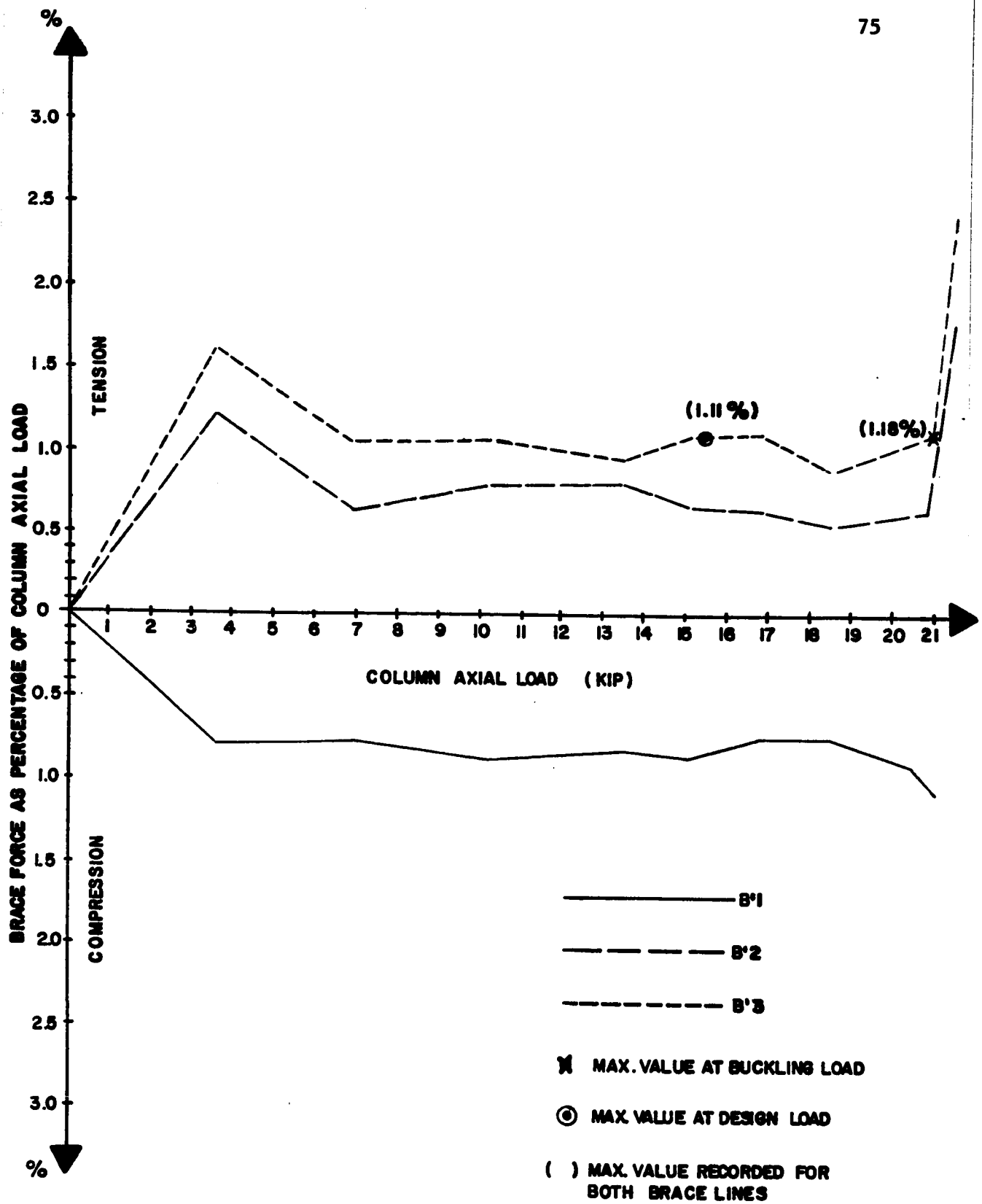

Figure 38 : AVERAGE COLUMN AXIAL LOAD vs. BRACE FORCE AS PERCENTAGE OF THE COLUMN AXIAL LOAD - BOTTOM BRACE LINE.

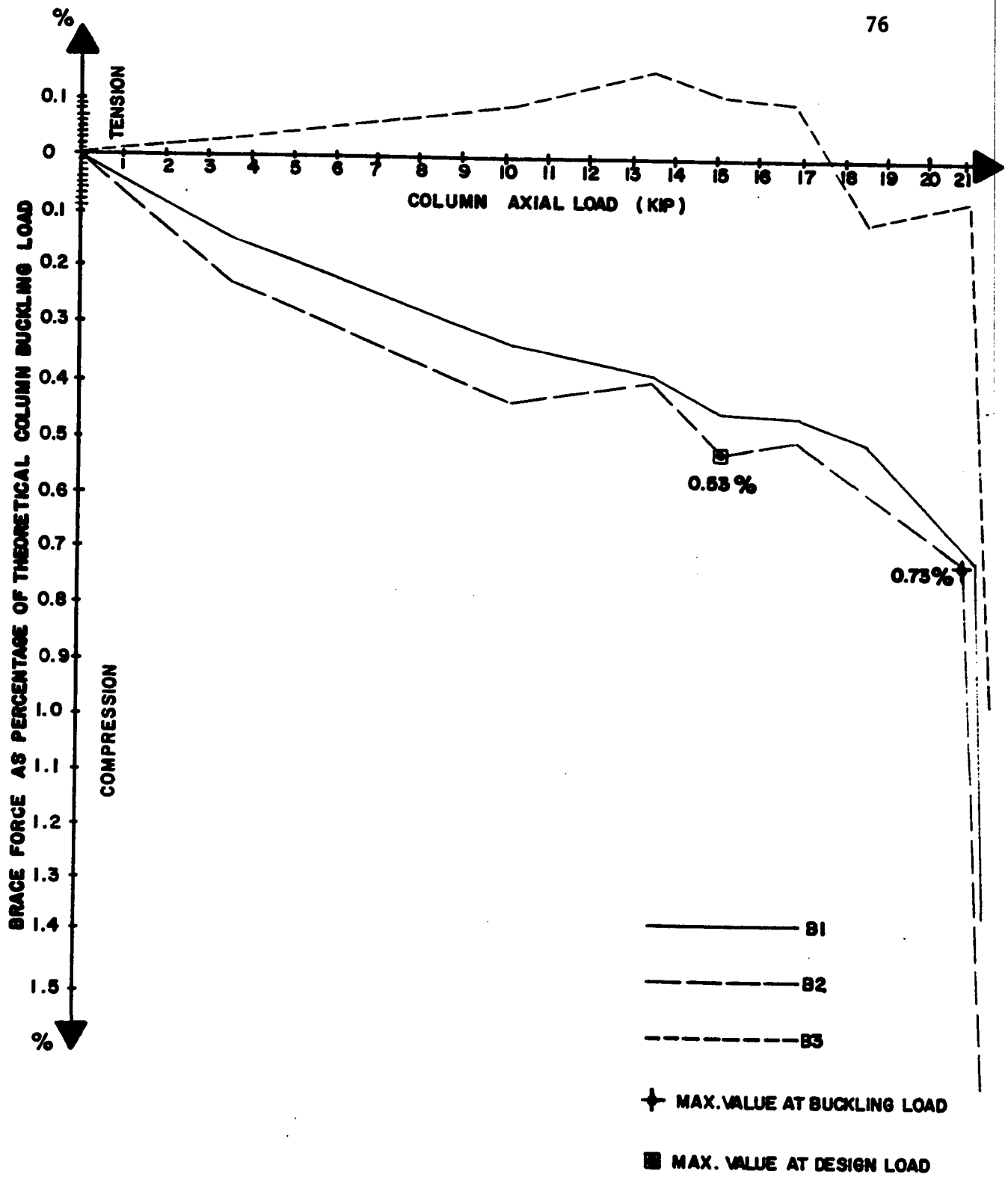

Figure 39 : AVERAGE COLUMN AXIAL LOAD vs. BRACE FORCE AS PERCENTAGE OF THEORETICAL COLUMN BUCKLING LOAD - TOP BRACE LINE

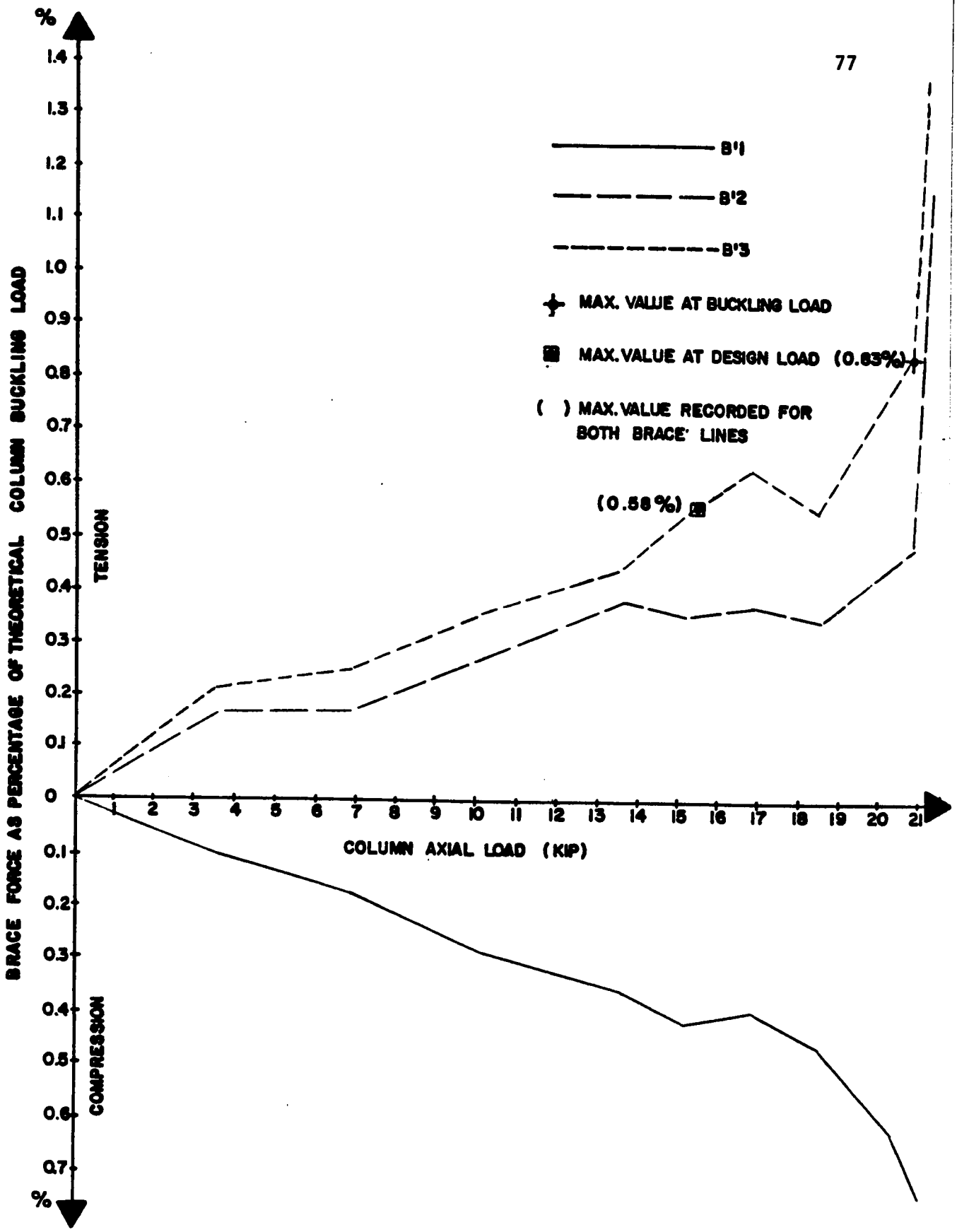

Figure 40 : AVERAGE COLUMN AXIAL LOAD vs. BRACE FORCE AS PERCENTAGE OF THEORETICAL COLUMN BUCKLING LOAD - BOTTOM BRACE LINE

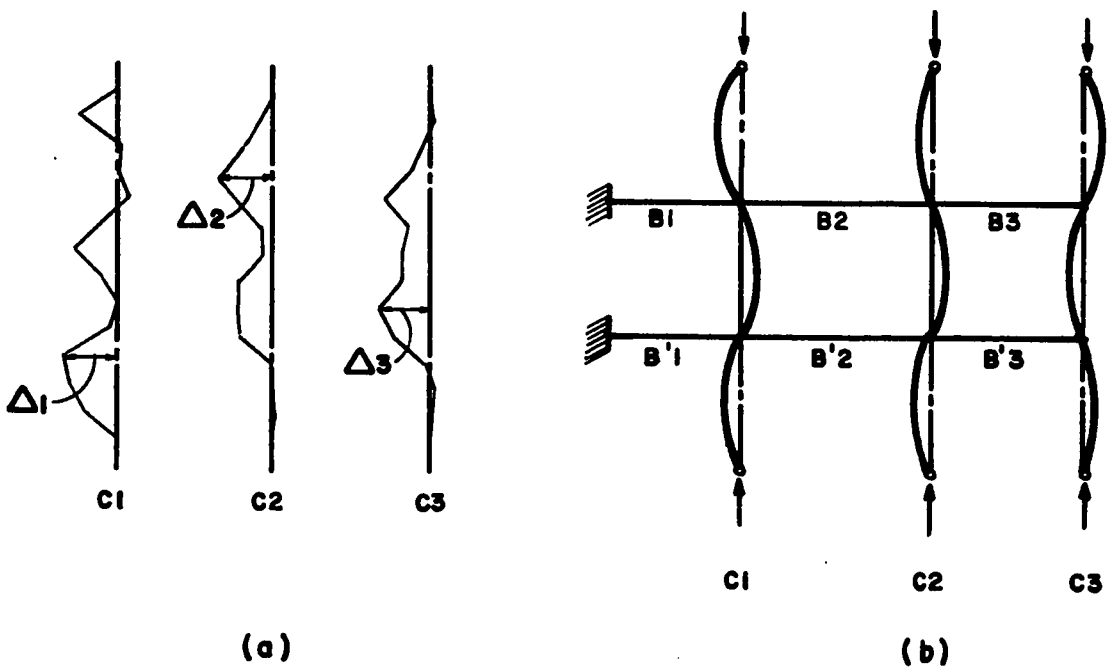

Figure 41 : BUCKLING OF THE SYSTEM ; (a) INITIAL COLUMN IMPERFECTION ;(b) BUCKLING SHAPE OF THE COLUMN SYSTEM

Legend

L = Overall length of column = 106.7", $\frac{L}{1000} = 0.107$

Δ_1 = Maximum initial imperfection in Column C_1 = 0.02", $\frac{\Delta_1}{L} = 0.00019$

Δ_2 = Maximum initial imperfection in Column C_2 = 0.021", $\frac{\Delta_2}{L} = 0.0002$

Δ_3 = Maximum initial imperfection in Column C_3 = 0.02", $\frac{\Delta_3}{L} = 0.00019$

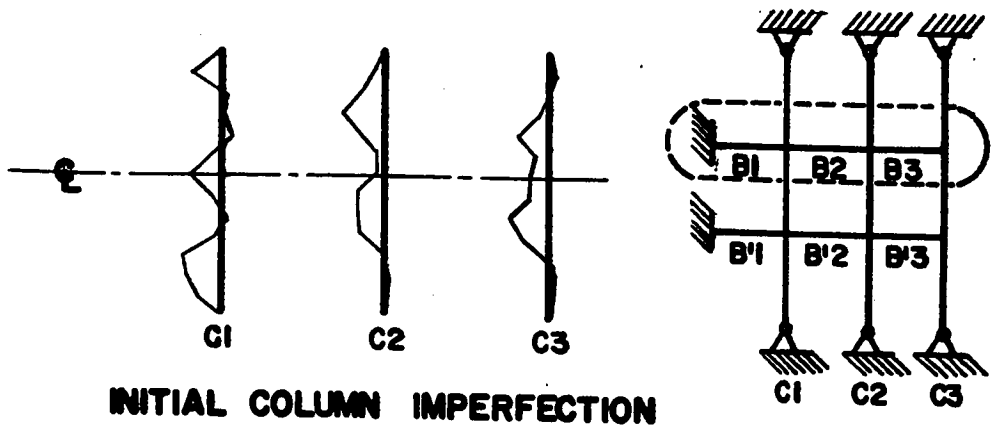

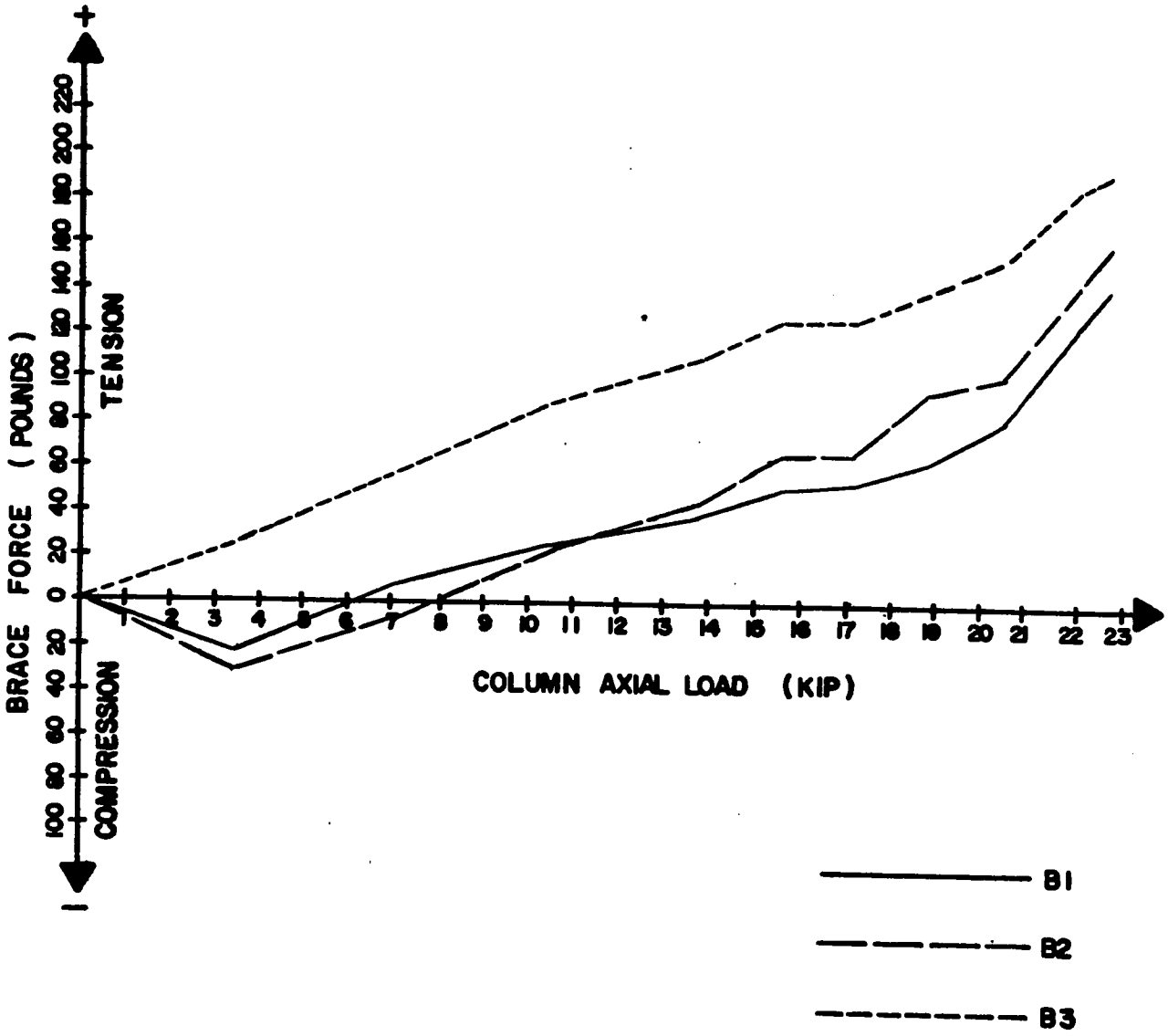

Figure 42 : AVERAGE COLUMN AXIAL LOAD vs. BRACE FORCE

(ii) Brace B3 was in tension.

(iii) Braces B1 and B2 were having almost the same rate of loading and their behaviour was similar.

(iv) Forces in brace B3 were higher than those of the other two braces but the behaviour was similar.

Referring to Figure 43, the behaviour of the bottom bracing line (B') can be summarized as follows :

(i) Brace B'3 was in tension.

(ii) Brace B'1 was in tension for the first loading step then changed to compression.

(iii) Brace B'2 was in compression.

(iv) Forces in braces B'2 and B'3 were having almost the same magnitude and their behaviour was similar in spite of the fact that they were of two different force signs (compression in the first and tension in the second), while forces in brace B'1 were very small.

(v) At buckling, forces in the three braces increased rapidly and considerably.

3.4.7.2 Analysis and discussion : The gain in the carrying capacity was of a higher value than the previous experiment (Exp. No. 6). The column system buckled at a level of load (22.72 kip) equal to about 78% of the theoretical buckling load for a single column braced at each one-third length

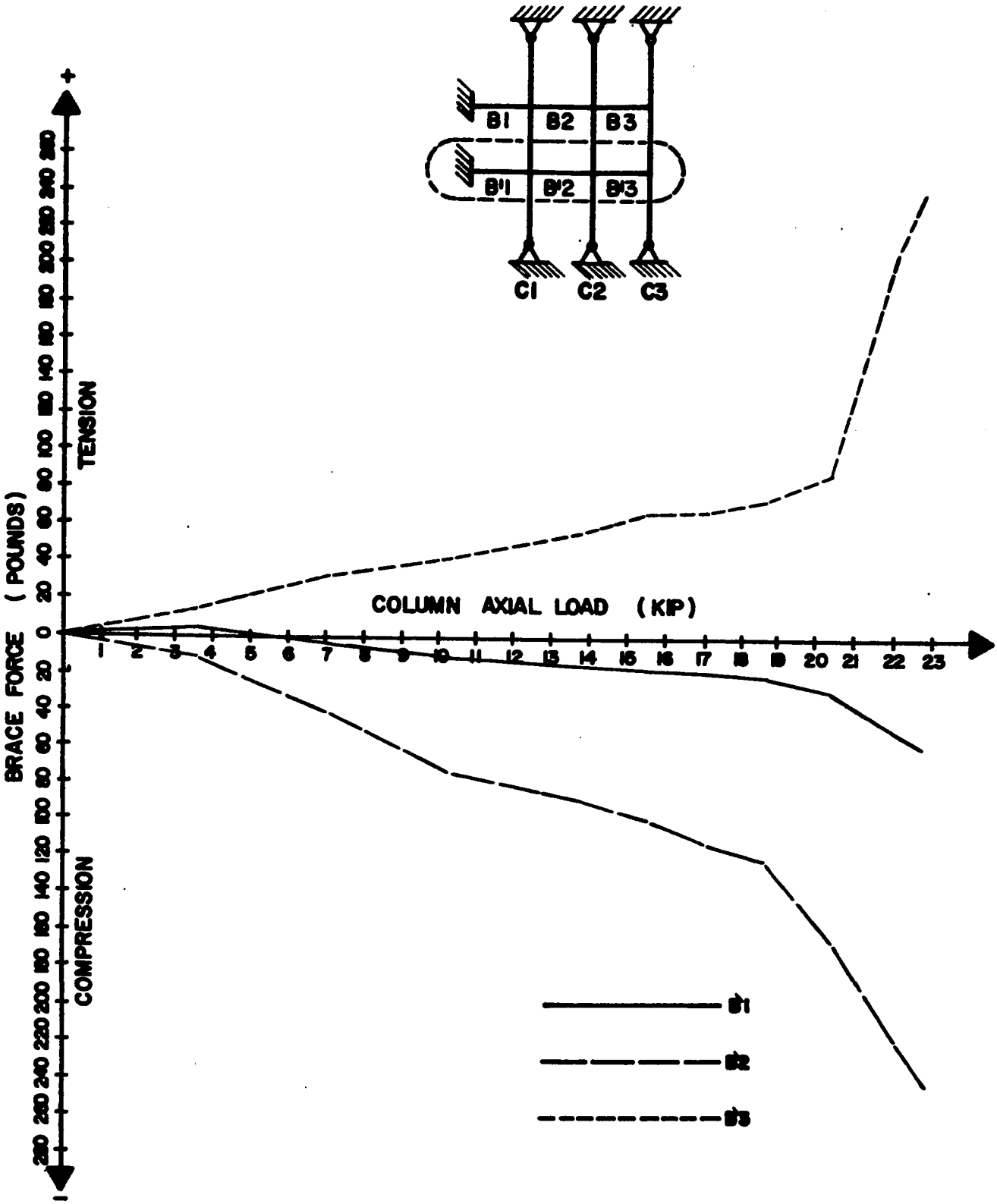

Figure 43 : AVERAGE COLUMN AXIAL LOAD vs. BRACE FORCE

(29.13 kips; Appendix E). This means that the column system could carry a load equal to about 6 times that one single unbraced column can carry alone theoretically (3.7 kips; Appendix E). The 22% discrepancy is almost due to the same effects as explained previously in Experiment No.6 (Due to residual stresses, initial column imperfections, eccentricities and end connections).

Forces in braces were small and the maximum brace force was 1.08% of the axial buckling load (on brace B'2; See Figures 44, 45 and 46 and 47 for brace percentages). Also the maximum brace force at the allowable load (15.34 kips; Appendix E) was of 0.82% (Figure 44) of that load.

The fact that brace B3 was the most loaded brace in the top brace line (Figure 42) instead of brace B1, as expected, is mainly due to the buckling shape of the column (Figure 48) and the initial column imperfections. These led to a tendency for brace forces to cancel rather than to be additive (Figure 48).

The behaviour of the bottom bracing line as shown in Figure 43, reveals that the forces in brace B1' act as if they were the resultant of the two opposite forces in braces B2' and B3'. Since the magnitude of the forces in brace B2' is greater than the forces in brace B3', the net resultant force should be compressive as shown by forces in brace B1' which confirms its behaviour as the resultant of the two. These variations in the forces of the braces mainly due to the effect of

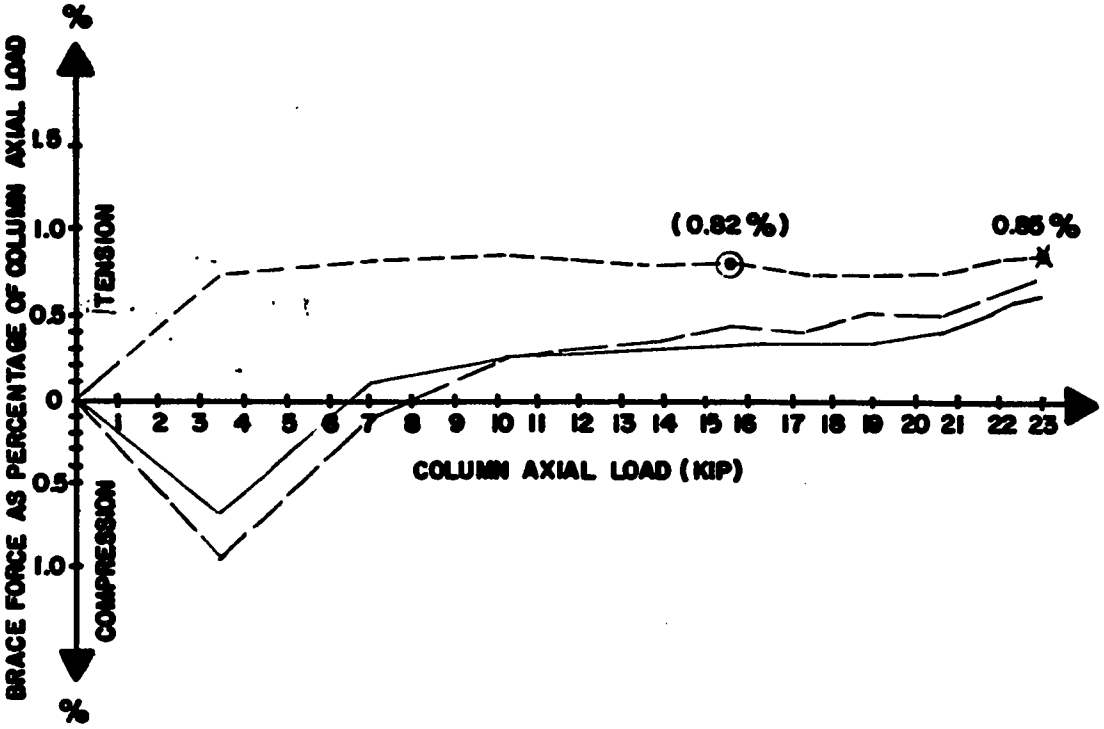

B1

B2

B3

X MAX. VALUE AT BUCKLING LOAD

⊙ MAX. VALUE AT DESIGN LOAD

( ) MAX. VALUE RECORDED FOR BOTH BRACES

Figure 44 : AVERAGE COLUMN AXIAL LOAD vs. BRACE FORCE AS PERCENTAGE OF THE COLUMN AXIAL LOAD - TOP BRACE LINE

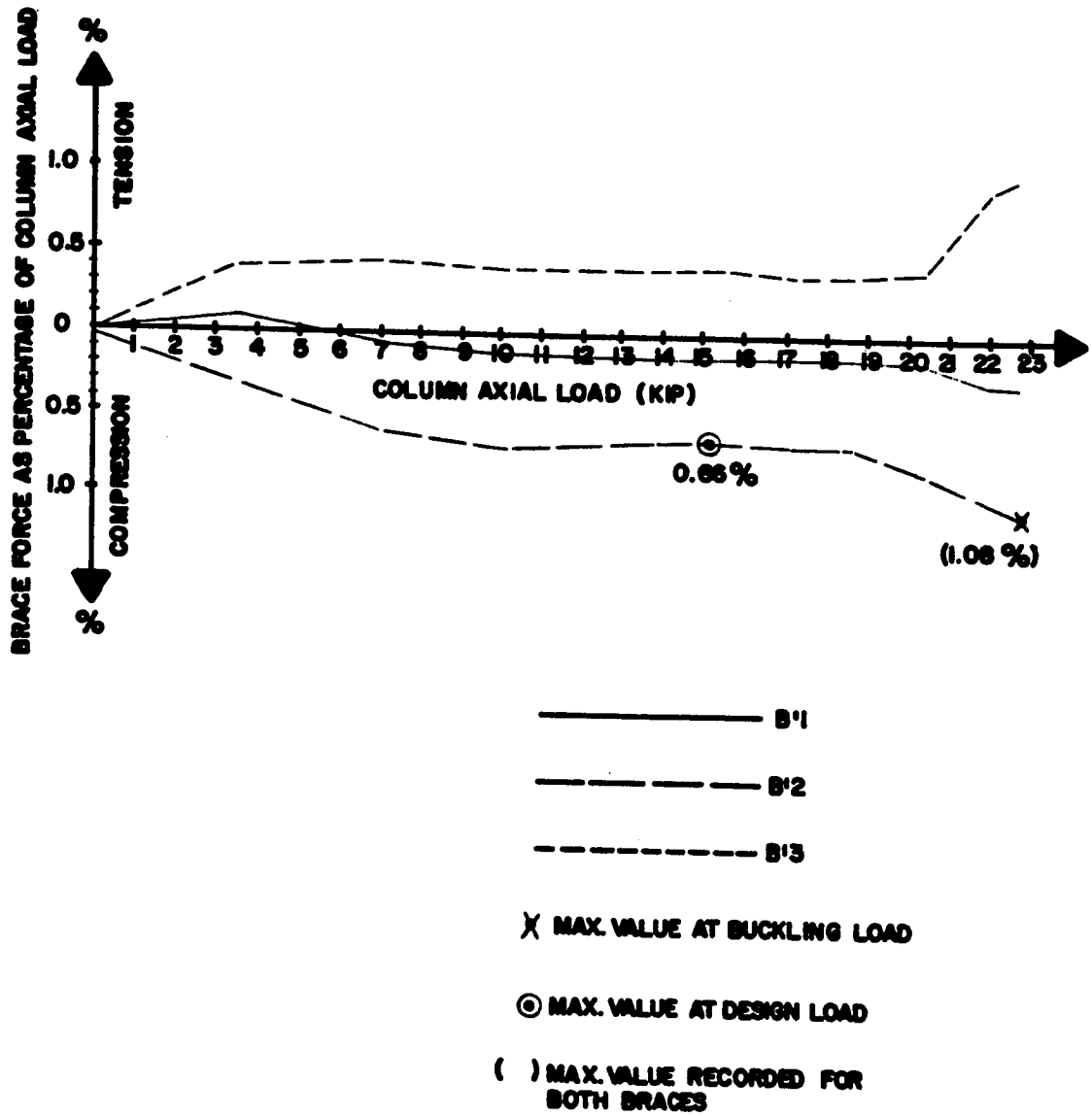

Figure 45 : AVERAGE COLUMN AXIAL LOAD vs. BRACE FORCE AS PERCENTAGE OF THE COLUMN AXIAL LOAD - BOTTOM BRACE LINE

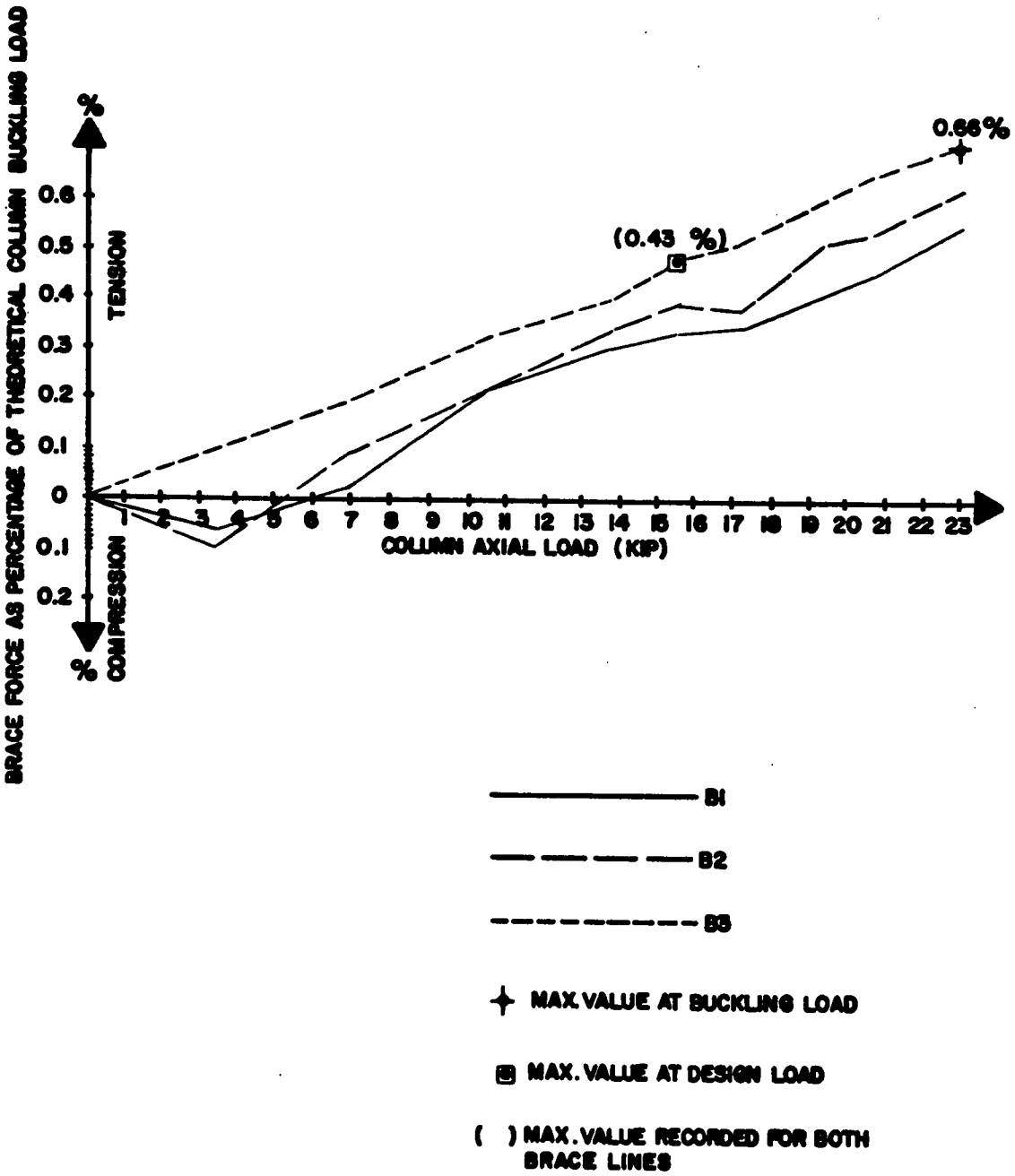

Figure 46 : AVERAGE COLUMN AXIAL LOAD vs. BRACE FORCE AS PERCENTAGE OF THEORETICAL COLUMN BUCKLING LOAD - TOP BRACE LINE

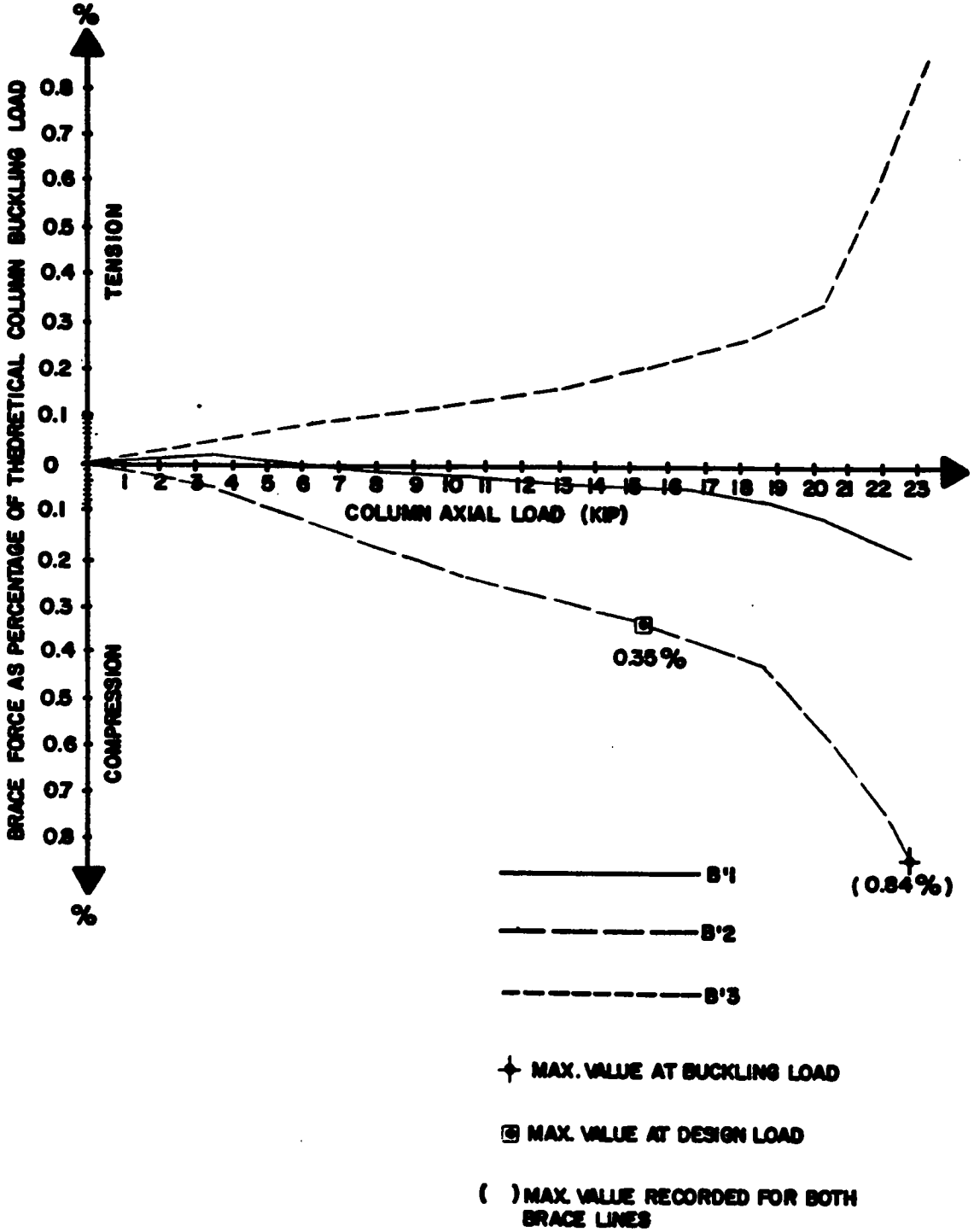

Figure 47 : AVERAGE COLUMN AXIAL LOAD vs. BRACE FORCE AS PERCENTAGE OF THEORETICAL COLUMN BUCKLING LOAD - BOTTOM BRACE LINE

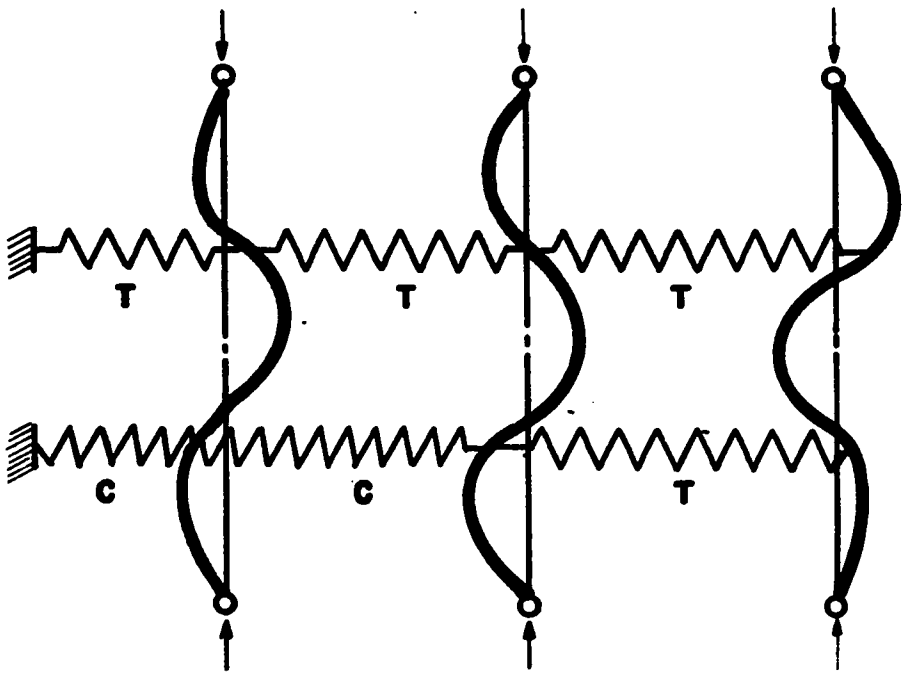

T = TENSION
C = COMPRESSION

Figure 48 : BUCKLED SHAPE OF THE COLUMN SYSTEM AND TYPE OF FORCES IN THE BRACES

the initial imperfections and eccentricities. The attainment of experimental buckling load close to the theoretical value indicated that the braces had adequate strength and rigidity and braces having lower strength can be used.

3.4.8 Experiment No. (8)

In this experiment braces of relatively very low strengths and stiffness were used in an attempt to reach the lowest possible brace strength and rigidity. To reduce the possible occurance of any end imperfection, good care was given for fixing the column end plates.

3.4.8.1 Behaviour

(1) Column System : The column system buckled at a higher level of load than that of the previous experiments (Exp. Nos. 6 and 7). Column C1 buckled first then the other two columns started to shape as shown in Figures 49 and 50.

(2) Bracing System (for brace properties, See Appendix H - Table 10) : Referring Figure 51, the behaviour of the top bracing line (B) can be summarized as follows :

(i) Brace B1 was in compression during the first loading increment then changed to tension.

(ii) Brace B2 was in compression during the first few loading increments then it started to change between tension and compression till the occurens of the buckling.

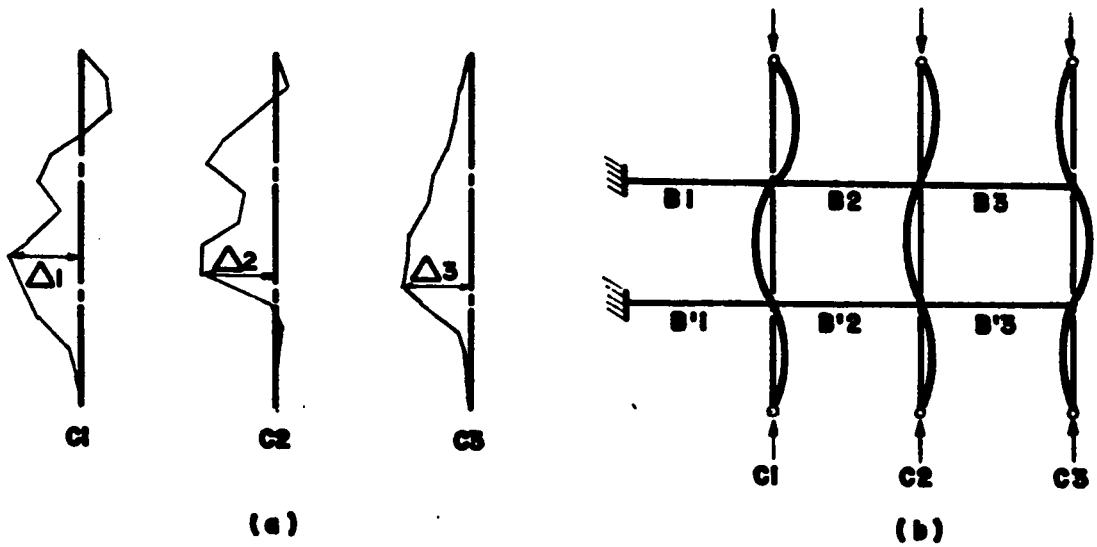

Figure 49 : BUCKLING OF THE SYSTEM ; (a) INITIAL COLUMN IMPERFECTION ; (b) BUCKLING SHAPE OF THE COLUMN SYSTEM

Legend

L = Overall length of column = 106.7", $\frac{L}{1000} = 0.107$

Δ_1 = Maximum initial imperfection in Column C_1 = 0.028", $\frac{\Delta_1}{L} = 0.00026$

Δ_2 = Maximum initial imperfection in Column C_2 = 0.025", $\frac{\Delta_2}{L} = 0.00023$

Δ_3 = Maximum initial imperfection in Column C_3 = 0.023", $\frac{\Delta_3}{L} = 0.00022$

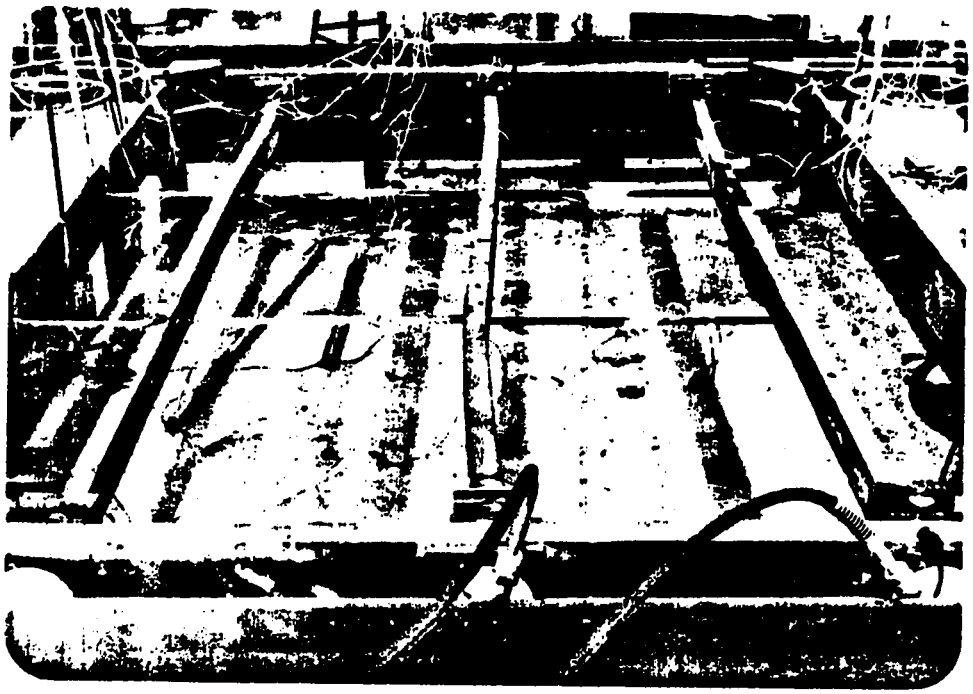

Figure 50 : Buckling shape of the columns

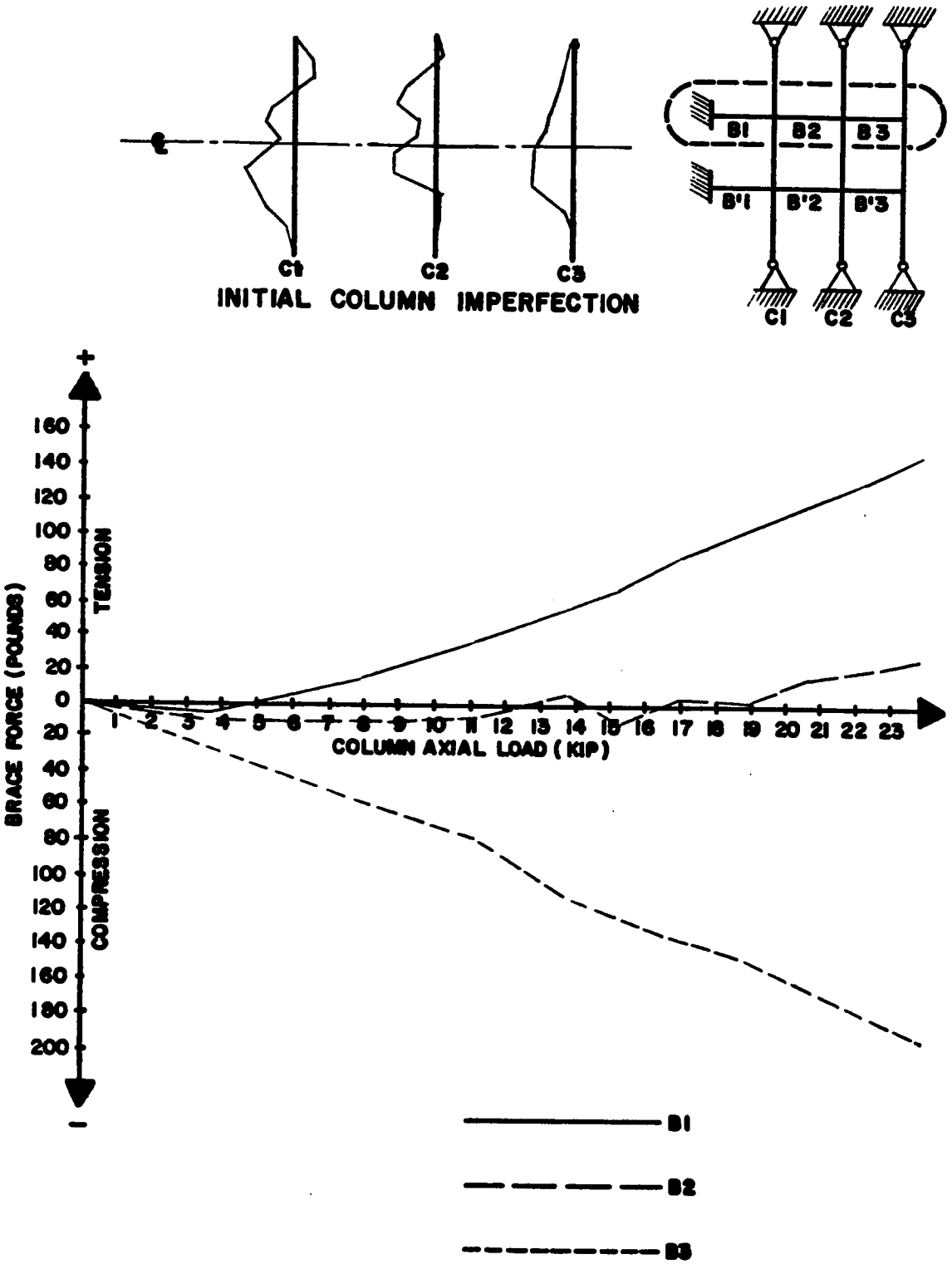

Figure 51 : AVERAGE COLUMN AXIAL LOAD vs. BRACE FORCE

(iii)Brace B3 was in compression.

(iv) Forces in brace B3 were little higher than those of brace B1. But, more or less they were having similar behaviour. After crossing the theoretical load for the case when the column braced at mid-height (15.13 kip-Appendix E) the forces in these two braces increased gradually with higher rate than before.

(v) Brace B2 was fluctuating between compression and tension with very small amout of brace forces.

Referring to Figure 52 , the behaviour of the bottom bracing line (B') can be summarized as follows :

(i) Brace B'1 was in tension during the first loading increment then changed to compression.

(ii) Brace B'2 was in compression.

(iii)Brace B'3 was in tension.

(iv) Forces in brace B'1 were little higher than those of brace B'3, but both of them were having similar behaviour.

(v) Forces in brace B'2 were smaller than those of the other two braces.

(vi) After crossing the theoretical buckling load for the case when the column braced at mid-height (15.13 kip; Appendix E), the forces in the three braces increased gradually with higher rate.

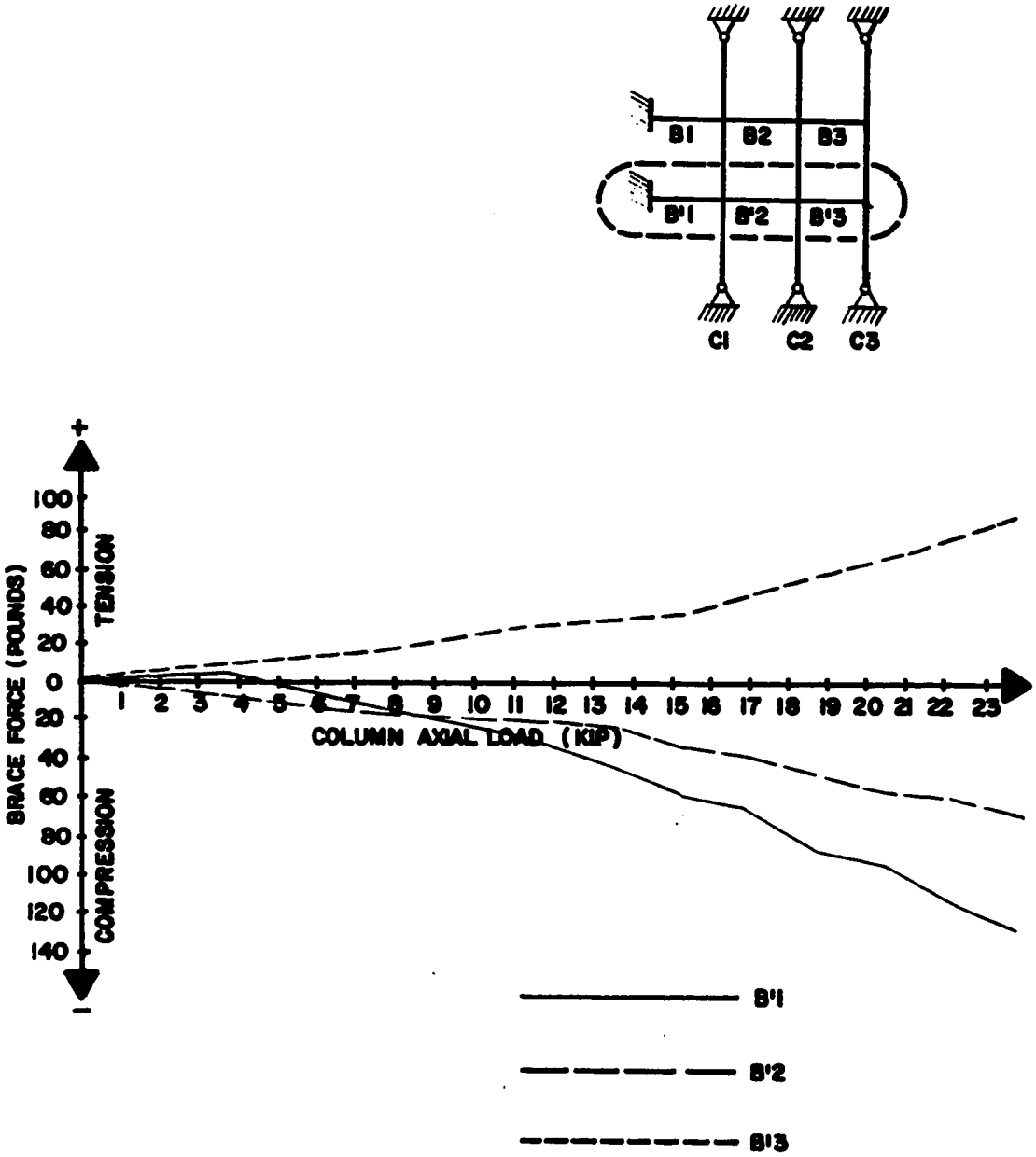

Figure 52 : AVERAGE COLUMN AXIAL LOAD vs. BRACE FORCE

3.4.8.2 Analysis and discussion : The column system buckled at a little higher load than that of the previous experiment (Exp. # 7). This is because of the fact that the discrepancy of fixing the end plates was minimized. The buckling occured at a load equal to 23.82 kip, which is equal to 82% of the theoretical buckling load for a single column braced at each one-third point of its height (29.13 kip - Appendix E). This means that the column system could carry a load equal to 6.3 times that one single unbraced column can carry alone theoretically (3.78 kip - Appendix E). The 18% discrepancy is expected due to the effects of the residual stresses, initial column imperfections, eccentricities and end connections as explained in the two previous experiments (Exp. # 6 and 7).

Brace forces were relatively small, even smaller than those recorded from the previous experiment. This is due to the good control which had been given for fixing the end plates. Which reduced the total amount of the initial column imperfection and consequently reduced the amount of the brace forces. The maximum brace force was 0.83% of the experimental buckling load (on brace B3; See Figures 53, 54, 55 and 56 for brace percentages). Also, the maximum brace force at the allowable load (15.34 kip - Appendix E) was 0.81% (Figure 53) of that load.

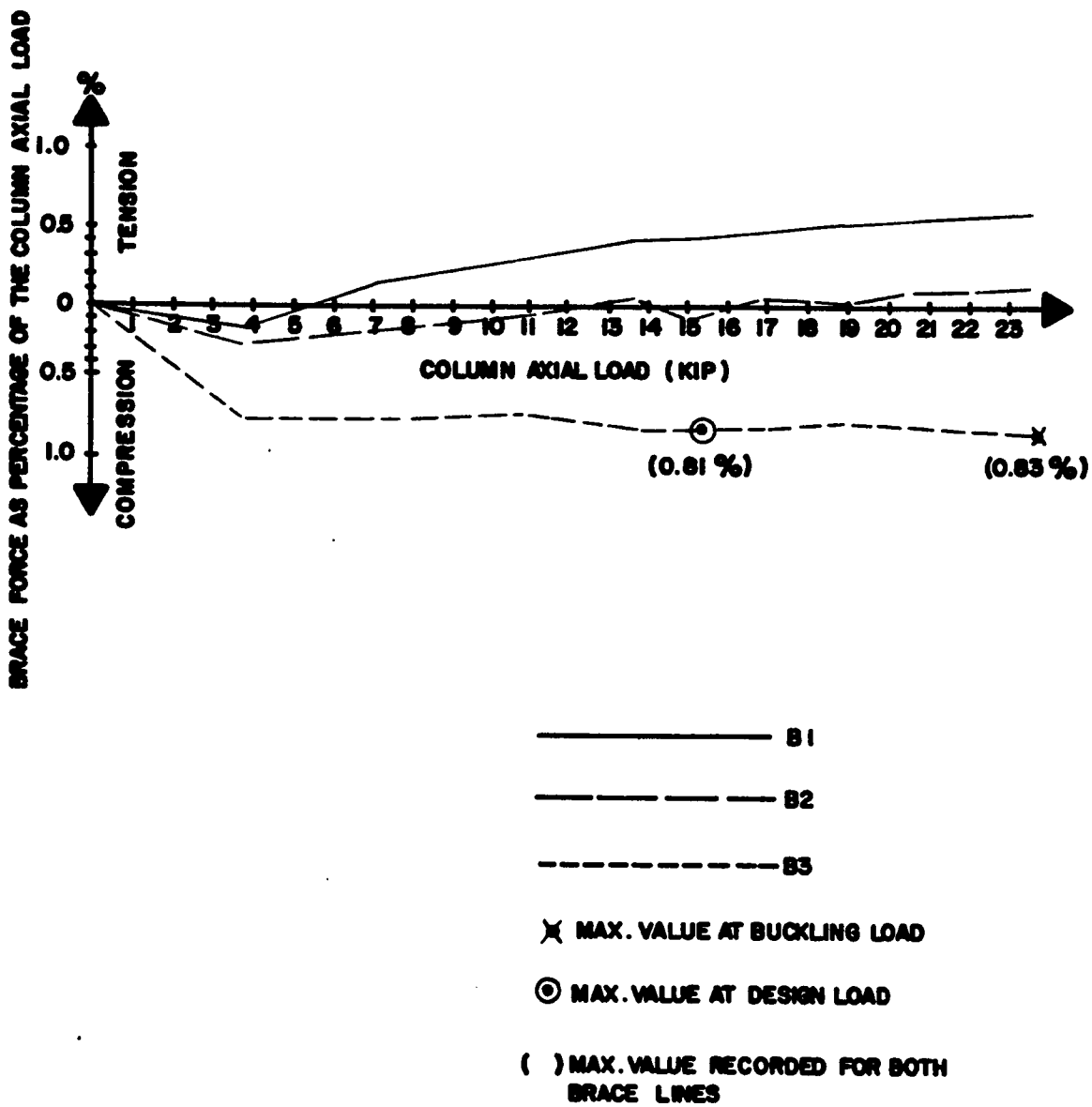

Figure 53 : AVERAGE COLUMN AXIAL LOAD vs. BRACE FORCE AS PERCENTAGE OF THE COLUMN AXIAL LOAD - TOP BRACE LINE

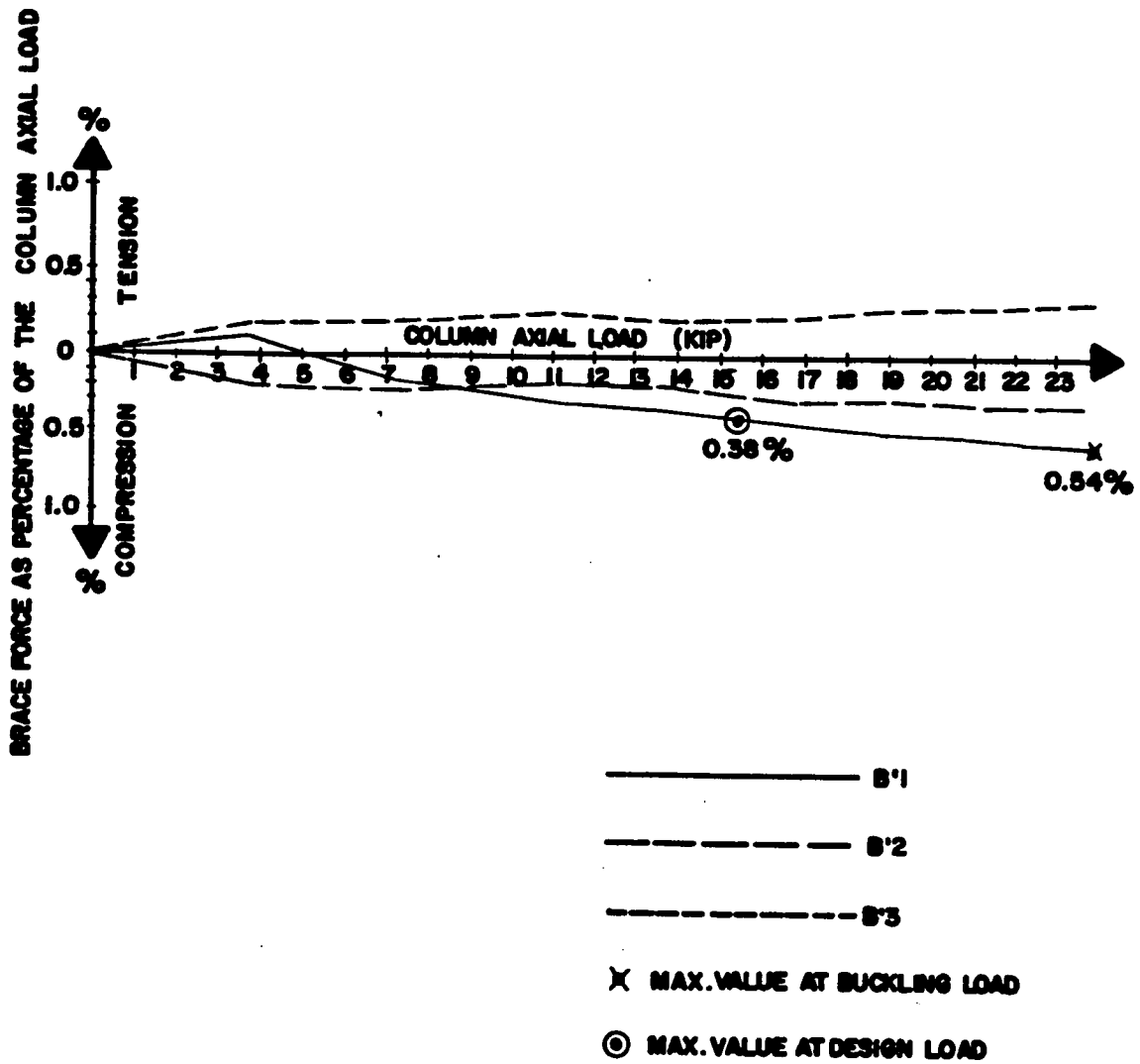

Figure 54: AVERAGE COLUMN AXIAL LOAD vs. BRACE FORCE AS PERCENTAGE OF THE COLUMN AXIAL LOAD - BOTTOM BRACE LINE

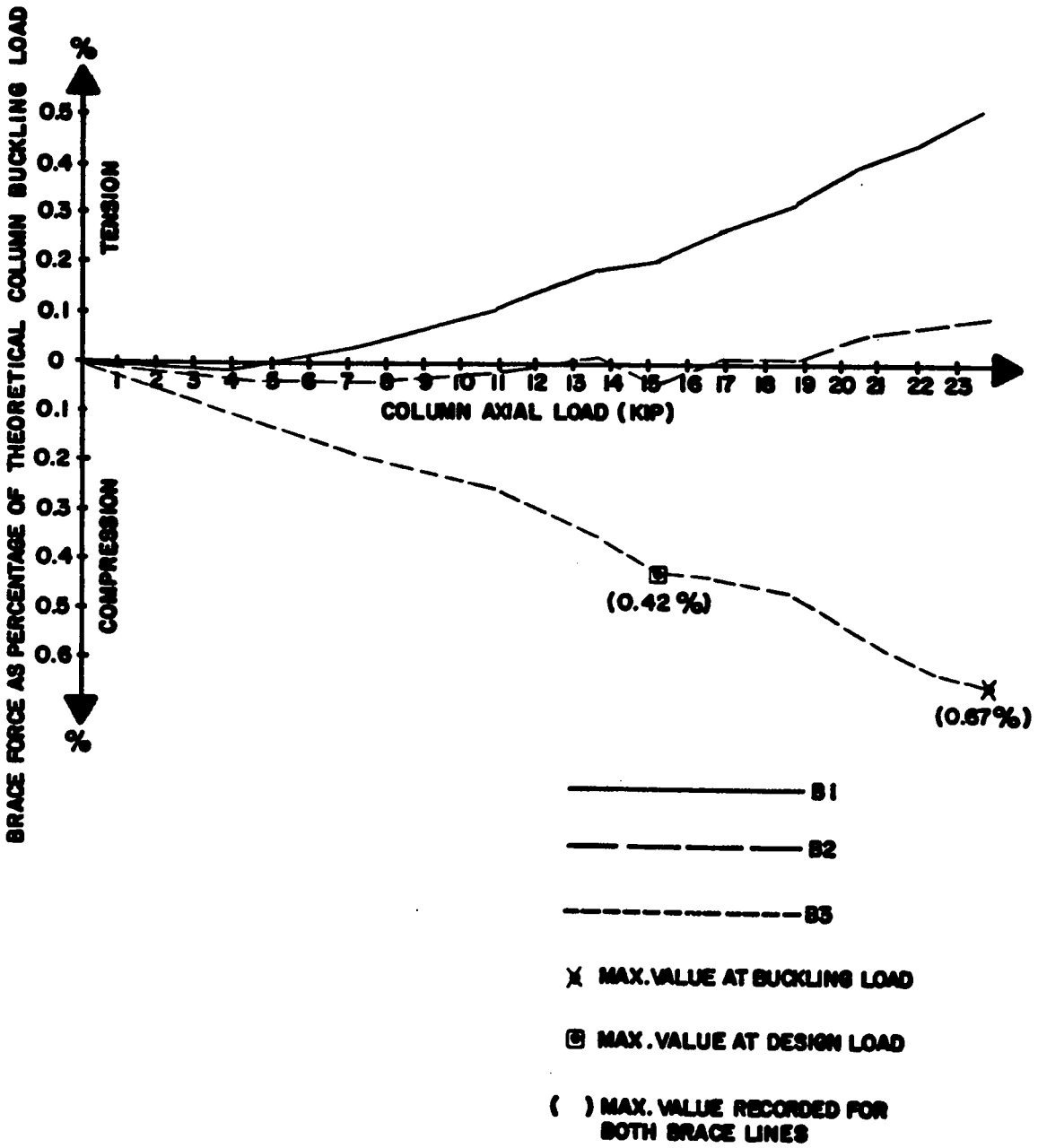

Figure 55 : AVERAGE COLUMN AXIAL LOAD vs. BRACE FORCE AS PERCENTAGE OF THEORETICAL COLUMN BUCKLING LOAD

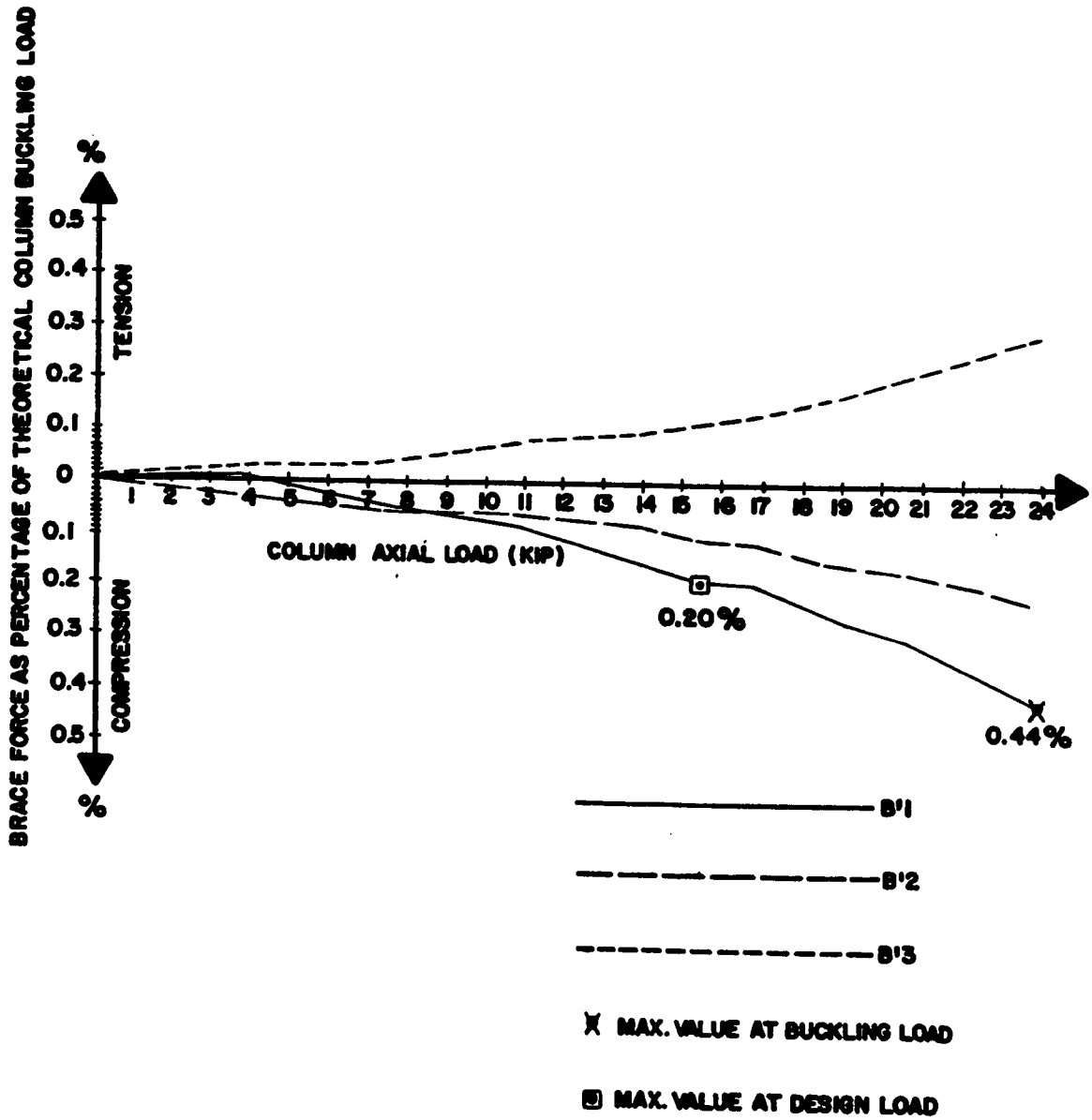

Figure 56 : AVERAGE COLUMN AXIAL LOAD vs. BRACE FORCE AS PERCENTAGE OF THEORETICAL COLUMN BUCKLING LOAD - BOTTOM BRACE LINE

The behaviour of the brace forces in both brace lines (top and bottom - Figures 51 and 52) showed an interesting ideal behaviour. Both lines had almost similar trend of behaviour and similar amount of forces,but the interesting point, is that, the sign of forces in the braces of one brace line were completely of the opposite signs for those typical braces in the second brace line. This reflected the expected ideal behaviour for the column when it starts to buckle in three half-wave failure. Where to do so, the column curvature at one brace line should move (with the same amount) to the opposite direction of the other point at the second brace line as shown in Figure 57; see Appendix C - Figure 64 for similar theoretical behaviour. This experimental result proves two points at the same time; first it proves that the theoretical assumption of the behaviour and the buckling shape for such a bracing system agreed with the actual behaviour; second it gives and shows a good evidence about the accuracy of the system.

Finally, the most important result of this experiment was the fact that, even though the braces used in this experiment were practically considered very light (Table 10), yet they could provide full bracing. Also the brace forces were very small specially when they compared with the great gain in the columns' carrying capacity, which proves again that only light and inexpensive braces are really needed to provide full bracing; no matter what the type of the braced system is.

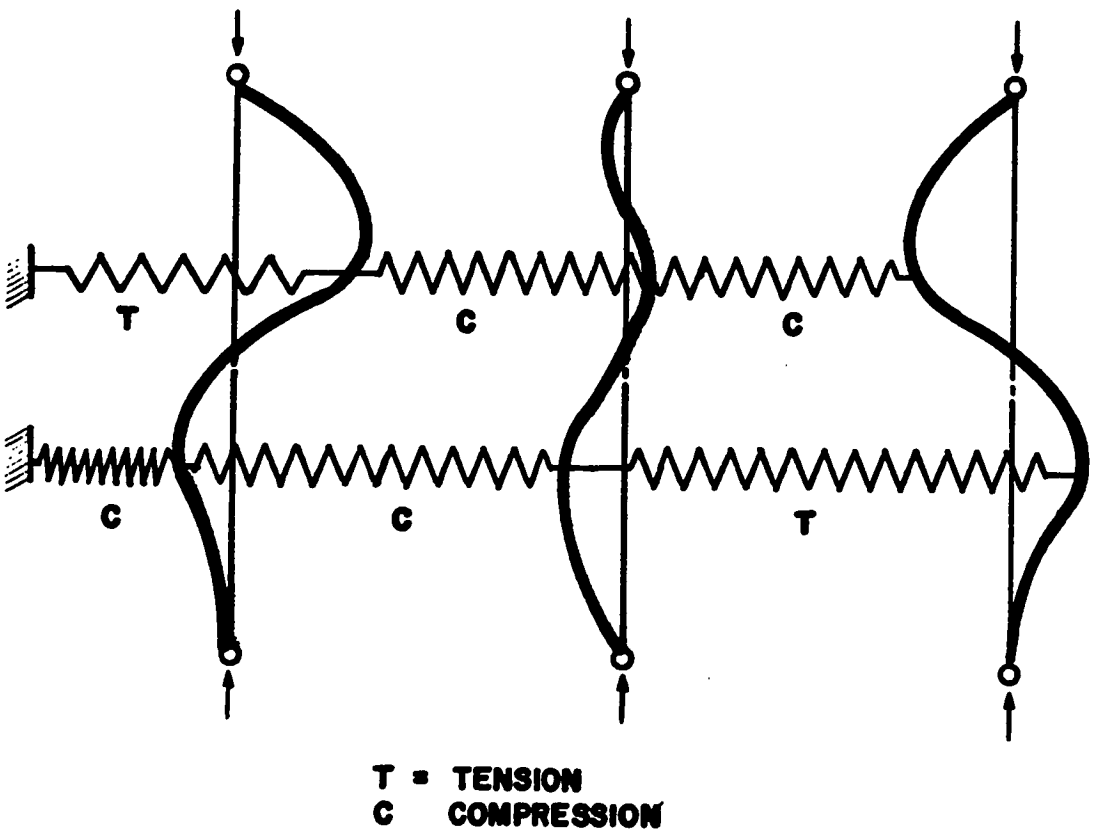

Figure 57 : BUCKLED SHAPE OF THE COLUMN SYSTEM AND TYPE OF FORCES IN THE BRACES

chapter **4**

COMPARISON OF THEORETICAL RESULTS WITH EXPERIMENTAL RESULTS

4.1 General

For comparison purposes, design charts presented by Medland[4] were used. These design charts allow straightforward evaluation of brace load and stiffness requirements for interbraced column structures have up to 6 parallel columns inter-braced by up to 12 lines of bracing. Both uniform and parabolic axial force distribution within the column length are considered. Once the present investigation deals with uniform axial forces, the uniform charts will be used.

4.2 Theoretical Results

All the required data for the evaluation of the theoretical brace force percentages are presented in Appendix D. The results of these analysis with the corresponding experimental results are presented in Tables 11 and 12.

TABLE 11 : Theoretical and experimental brace force percentages at the maximum experimental column loads

Exp. #	Brace Stiffness $K = \frac{EA}{L}$ (lb/in)X10^3	Brace B1		Brace B2		Brace B3	
		Theo.Value	Exp.Value	Theo. Value	Exp.Value	Theo.Value	Exp.Value
			(Single-interbraced system)				
2	260	1.50%	1.03%	1.0%	0.40%	0.50%	0.10%
3	199	1.59%	0.4%	1.06%	0.20%	0.53%	0.56%
4	164	1.64%	1.15%	1.09%	1.30%	0.55%	1.42%
5	87	1.71%	0.05%	1.14%	0.55%	0.57%	0.50%
			(Double-interbraced system)*				
6	310	1.26%	1.0%	1.26%	1.10%	0.63%	1.18%
7	149	2.01%	0.63%	1.34%	1.08%	0.67%	1.05%
8	99	2.1%	0.61%	1.4%	0.28%	0.70%	0.83%

* Max. value of upper and lower braces

TABLE 12 : Theoretical and experimental brace force percentages at the allowable column loads@

Exp. #	Brace Stiffness $K = \frac{EA}{L}$ (lb/in)X10^3	Brace B1		Brace B2		Brace B3	
		Theo.Value	Exp.Value	Theo.Value	Exp.Value	Theo.Value	Exp.Value
		(Single-interbraced system)					
2	260	1.47%	0.99%	0.98%	0.35%	0.49%	0.0%
3	199	1.53%	0.22%	1.02%	0.0%	0.51%	0.19%
4	164	1.59%	1.30%	1.06%	1.70%	0.53%	0.53%
5	87	1.65%	0.15%	1.10%	0.49%	0.55%	0.49%
		(Double-interbraced system)*					
6	310	1.14%	0.9%	1.14%	1.01%	0.57%	1.11%
7	149	1.74%	0.28%	1.16%	0.66%	0.58%	0.82%
8	99	1.77%	0.45%	1.18%	0.20%	0.59%	0.81%

@ By using the AISC[8] specifications (See Appendix E)

* Maximum value of upper and lower braces

chapter **5**

SUMMARY, CONCLUSION AND RECOMMENDATIONS

5.1 Introduction

Results from such a large scale experiment are usually not expected to be very close to those results predicted by theoretical analysis, mainly due to the fact that many discrepancies exist between an actual structure and an ideal one.

The present investigation showed the behaviour of braces and their response to the applied column loading, also the responses of the columns influenced by these braces. It has been noted from all experimental results that despite the differences in the behaviour of braces the brace forces were usually small in all cases. This shows that brace members need to be designed for a small force only.

5.2 Summary and Conclusions

A series of buckling tests were performed on a three-column braced structure to examine the behaviour of such a structural system and to find the forces in the braces at various stages of loading. The stiffness and spacing of braces were varied to determine their effects on buckling

loads and to provide some useful data for design.

Two cases of the bracing system were studied. In the first case, the columns were braced only at the mid-length and in the second case, the columns were braced at each one-third length. Static loads were applied to each column by hydraulic jacks and the actual force in the column and the braces were determined from the record of measured strains. Based on this study, the following conclusions are drawn :

(1) The carrying capacity of the columns can be increased effectively by bracing them laterally to an unyielding support.

(2) The required area and stiffness of lateral braces to force buckling of a column between two brace points are relatively small. The maximum brace force recorded in the experiment was less than 2% of the buckling or the allowable load for a column.

(3) Brace forces are significantly affected by initial imperfections (crookedness) of columns. For normal columns of acceptable initial imperfections (in the neighbourhood of 1/1000 of the column length), the brace forces are relatively small.

(4) Theoretical results obtained from Medlands[4] design aids, agreed qualitatively in most cases with experimental results, though a close agreement was lacking. This

could be attributed to the column imperfections and inherent end eccentricities. These led to a tendency for brace forces to cancel rather than to be additive as Medlands' analysis assumes.

(5) For design of braces in a three-column braced structure, the recommended design force of 2-2½% of axial column load appears to be adequate. This force is larger than the values obtained from all tests.

(6) The brace stiffnesses provided were orders of magnitude larger than the minimum stiffnesses required by Medland's theory and this may account for the lack of correlation between brace stiffness and brace force in the experimental results (See Tables 11,12 and 13).

5.3 Recommendations

It is recommended that further research investigations should be carried out to cover the followings :

(a) Initial column imperfections should be controlled and varied in steps to study their effects on the behaviour and the magnitude of brace forces.

(b) Number of bays could be increased to find its effect on the magnitude of the brace forces.

(c) The effect of other types of bracing system could be examined (i.e. more than two horizontal brace lines or

different attachments of cross bracings).

(d) Various end conditions for columns can be looked into to observe the influence of end conditions other than pinned ends.

REFERENCES

1 Zuk, W., "Lateral Bracing Forces on Beams and Columns",Journal of Engineering Mechanics Div., ASCE, Vol.82, No.EM3, July 1956.

2 Winter, Green and Cuykendall, "Light Gage Steel Columns in Wall-Braced Panels", Cornell Univ. Engr. Exper. Station Bulletin # 35, Part 2, October 1947.

3 Winter, G., "Lateral Bracing of Columns and Beams", Journal of the Structural Division, ASCE, Vol.84, No.ST2, March 1958.

4 Medland, I.C., "A Basis for the Design of Column Bracing", The Structural Engineer, Vol.55, No.7, July 1977.

5 Medland, I.C. and Segedin, C.M., "Brace Forces in Interbraced Column Structures", Journal of the Structural Div., ASCE, Vol.105, No.ST7, July 1979.

6 Williams, F.W., "Buckling of Elastically Supported Continuous Columns, Iecluding Hand Design of Grids of Columns and Supporting Beams", Proc. Instn. Civ. Engrs, Part 2, Vol.69, June 1980.

7 Tall, L.,"Structural Steel Design", Second Edition, Chap.9, The Ronald Press Company, New York, 1974.

8 AISC, "Manual of Steel Construction", 8th ed., AISC, New York, 1980.

APPENDICES

Appendix A : Estimation of the lateral force at mid-height of a single column with concentric axial load and immovable point support. (By Zuk[1])

Appendix B : Estimation of the lateral force at mid-height of a single column with concentric axial load and an elastic support. (By Winter, Green and Suyeondall)[2]

Appendix C : Simplified mathematical analysis to determine the lower limits of brace strength and rigidity to produce full bracing in a single-braced column. (By Winter[3])

Appendix D : Evaluation of the theoretical brace force percentages by using Medland's[4] design charts.

Appendix E : Evaluation of design (allowable) carrying loads and ultimate buckling loads for single experimental column. (By AISC[8] Formulas).

Appendix F : Computer outputs : Tables for brace force percentages.

Appendix G : Sample test on evaluation of Young's modulus of elasticity (E) for experimental column material.

Appendix H : Tables for experimental brace properties.

APPENDIX A : Estimation of the lateral force at mid-height of a single column with concentric axial load and immovable point support (By Zuk[1])

Notations

Referring to figure 58

y_o = Initial crookedness, assumed as 'a sin $\frac{X}{L}$'

y_1, y_2 = Additional deflection due to P

Bl = EI = Flexural rigidity

P = Critical elastic buckling load for braced column at mid-height $= \frac{4\pi^2 EI}{L^2}$

$= \frac{4\pi^2 Bl}{L^2}$

$p = \frac{P}{EI} = \frac{P}{Bl}$

Analysis

The differential equations of equilibrium are the following :

Between $X = 0$, $X = \frac{L}{2}$

$$EI \frac{d^2y}{dX^2} = -P(y_o + y_1) + \frac{FX}{2} \qquad \text{(A-1)}$$

Between $X = \frac{L}{2}$, $X = L$

$$EI \frac{d^2y}{dX^2} = -P(y_o + y_2) + \frac{FX}{2} - F(X - \frac{L}{2}) \qquad \text{(A-2)}$$

The boundary and continuity conditions are as the following :

at $X = 0$, $y_1 = 0$, $\frac{d^2y_1}{dX^2} = 0$

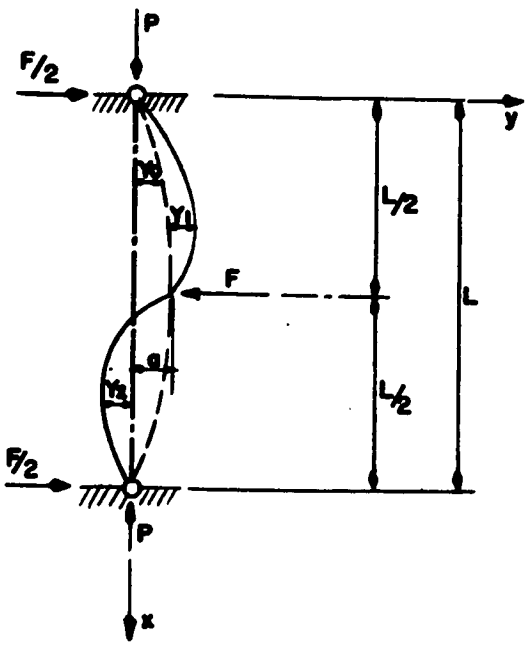

Figure 58 : BUCKLING OF AN AXIALLY LOADED SLENDER COLUMN BRACED WITH IMMOVABLE POINT SUPPORT AT MID-HEIGHT

at $X = \frac{L}{2}$, $y_1 = y_2 = 0$, $\frac{dy_1}{dX} = \frac{dy_2}{dX}$

at $X = L$, $y_2 = 0$, $\frac{d^2y_2}{dX^2} = 0$

The solution of these equations yields to the following :

$$F = \frac{2p^3L^2a\ (1 + \cos pL + 2\sin^2\frac{pL}{2})}{(\pi^2-p^2L^2)\ [\frac{2\tan\frac{pL}{2}}{BIp^2} - \frac{L}{2BIp} - \frac{L\cos pL}{2BIp} - \frac{L\sin^2\frac{pL}{2}}{BIp}]} \qquad \text{(A-3)}$$

The formula (A-3), of course, is too complex for general use. However if the critical load substituted by its value

$$P = \frac{4\pi^2BI}{L^2}$$

the formula reduces to :

$$F_{max} = \frac{64\pi^2BIa}{3L^3} = \frac{64\pi^2EIa}{3L^3} \qquad \text{(A-4)}$$

It is noted that the lateral force is a direct function of the initial crookedness 'a'.

APPENDIX B : Estimation of the lateral force at mid-height of a single column with concentric axial load and an elastic support. (By Winter, Green and Cuykendall)[2]

1. It has been proved that the maximum brace force F for the column to be buckled as in curve (2) in Figure 59 can be demonstrated as

$$F = K_1 a \frac{\mu}{1-\mu} \qquad \text{(B-1)}$$

where the total deflection $\delta = \frac{\mu a}{1-\mu}$;

a = Initial crookedness in an elastically braced column;

K_1 = Elastic spring constant of the support ;

$$\mu = \frac{P}{P_{critical}} = \frac{P}{P_{cr}} ;$$

$$P_{cr} = \frac{\pi^2 EI}{L^2} + \frac{3}{16} K_1 L \text{ (Approx.value)}$$

This critical value (P_{cr}) applies only for values of K not exceeding

$$\frac{16\pi^2 EI}{L^3} \qquad \text{(B-2)}$$

∴ F can be written as :

$$F = \frac{16aK_1PL^2}{16\pi^2 EI + 3K_1L^3 - 16PL^2} \qquad \text{(B-3)}$$

where: $K_1 < \frac{16\pi^2 EI}{L^3}$ (Otherwise the column will buckle as in curve (3) rather than (2) in Figure 59);

$P < P_{cr}$ (Otherwise the deflection and the lateral force become infinite).

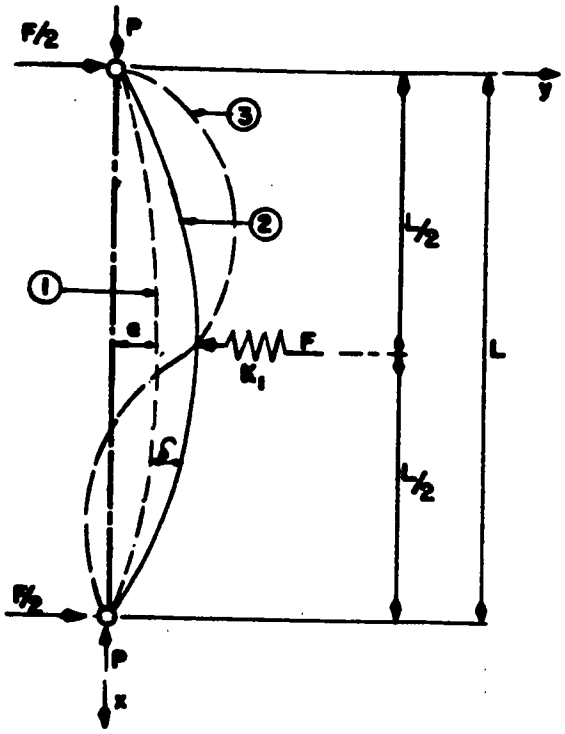

Figure 59 : BUCKLING OF AN AXIALLY LOADED SLENDER COLUMN BRACED WITH AN ELASTIC SUPPORT AT MID-HEIGHT

2. The lateral force F for the case where the column will buckle as in curve (3) in figure 59, would be approximated as :

$$F_{max} = a \frac{\psi}{1 - \frac{\psi}{K_1}} \qquad \text{(B-4)}$$

where

$$\psi = \frac{64\pi^2 EI}{3L^3} \qquad \text{(B-5)}$$

It can be noted from F_{max} due to immovable support (Appendix A, Eq. A-4) and Eq. B-4; that for the same applied load, the effect of the elastic support is to increase the value of the lateral force F over that of the immovable support (Appendix A).

APPENDIX C : Simplified mathematical analysis to determine the lower limits of brace strength and rigidity to produce full bracing in a single-braced column (By Winter[3]).

1. For any Ideal Column with hinged ends and with unyielding support at mid-height (Figure 60), it buckles in two half sine-waves at the Euler-Shanley load :

$$P_e = \frac{\pi^2 EI}{L^2} = 4P'_e \qquad \text{(C-1)}$$

where

P'_e = Euler load (without mid-height supp.)
E = Youngs modulus of elasticity.

If a real or fictitious hinge was introduced at the mid-height support in the continuous column, as shown in Fig. 60 nothing would be changed, where

$$y'' = \frac{-M}{EI} = 0$$

2. If the column of Figure 60 braced by an elastic support (Figure 61) and if this support is rigid enough to produce (full bracing)* the column would buckle in exactly the same manner as for unyielding support, and again a fictitious hinge can be interduced at the support, as before (Figure 61).

---

* Full bracing = If the actual elastic bracing equivalent in effect to an unyielding support; such bracing will be called full bracing.

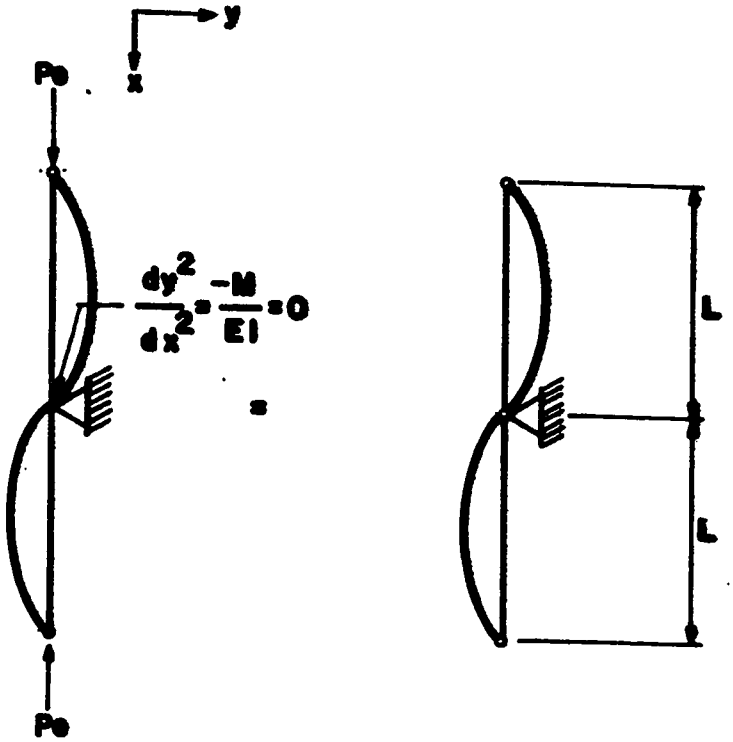

Figure 60 : BUCKLING OF AN IDEAL COLUMN BRACED AT MID-HEIGHT WITH UNYIELDING SUPPORT

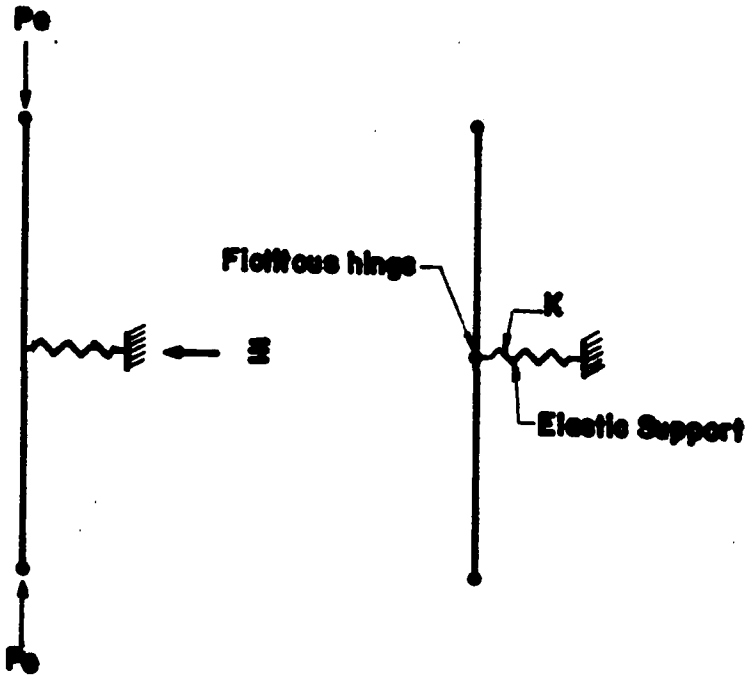

Figure 61 : BUCKLING OF AN IDEAL COLUMN BRACED AT MID-HEIGHT WITH ELASTIC SUPPORT

3. Actual column (Figure 62) can be represented with initial crookedness do which is small as compared to 2L.

This column is supported by a single elastic support at its mid-height (Fig.62). As the column loaded, the support reaction would be $F = Kd$, and if full bracing is provided, the final failure occurs at a load equal (or almost equal)to P_e as shown solidly in Figure 62.

Taking moment about the fictitious hinge :

$$M = \frac{FL}{2} - P_e(do + d) = 0 = \frac{KdL}{2} - P_e(do + d)$$

where :

d = deflection due to loading (The elastic brace with spring constant K deflects together with the column a distance d).

∴ The spring constant required to produce full bracing :

$$K_{reg} = \frac{2P_e}{L}\left(\frac{d_o}{d} + 1\right) \qquad \text{(C-2)}$$

For an ideal column $d_o = 0$

$$\therefore K_{id} = \frac{2P_e}{L} = \frac{2}{L}\left(\frac{\pi^2 EI}{L^2}\right) = \frac{2\pi^2 EI}{L^3} < K_{req} \qquad \text{(C-3)}$$

It is noted that the larger the initial imperfection do the larger the required K_{req} (Eq. C-2).

The required strength of bracing S = reaction F, i.e.

$$S_{req} = F = K_{req}d = \frac{2P_e}{L}\left(\frac{d_o}{d} + 1\right) d = \frac{2P_e}{L}(d_o + d) = K_{id}(d_o + d) \qquad \text{(C-4)}$$

∴ It can be concluded that full bracing has been achieved if :

$K_{act} \geq K_{req}$ and $S_{act} \geq S_{req}$

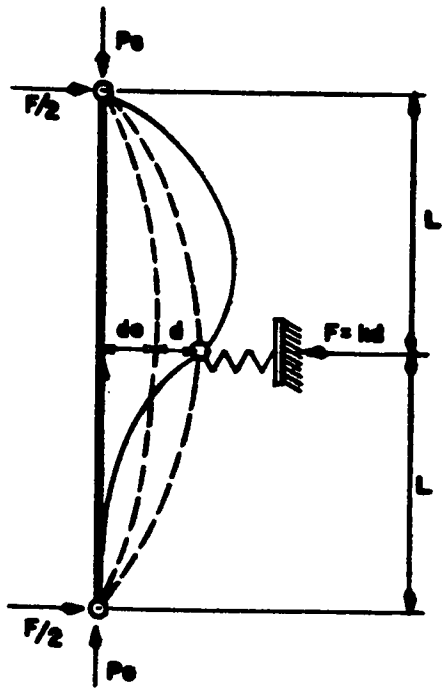

Figure 62 : BUCKLING OF ACTUAL COLUMN BRACED AT MID-HEIGHT BY SINGLE ELASTIC SUPPORT

4. Column with two equal and equidistant supports:

When the column loaded with P_e, it could buckle in one of the two modes shown on Figure 63(a,b) To decide which of these modes requires the larger support rigidity K, ideal column to be investigated first.

From Figure 63a: Taking moment about the fictitious hinge :

$FL - P_e d = 0$, with $F = K_{id} d$ gives :

$$K_{id} = \frac{P_e}{L} \qquad \text{(C-5)}$$

Also, from Figure 63b :

$\frac{F}{3} L - P_e d = 0$, by substitution value of F given up

$$K_{id} = \frac{3P_e}{L} > \frac{P_e}{L} \qquad \text{(C-6)}$$

∴ The second mode (Figure 63b) which governs and determines the magnitude of K_{id}.

Next, for obtaing values for K_{req} and S_{req}, an initial imperfection should be assumed. To be in the conservative side, the initial shape of the column assumed to be a symmetrical S-shape (Figure 64).

∴ from Figure 64:

$\frac{F}{3} L - P_e(d_o + d) = 0; \quad F = K_{req} d$

$$\therefore \quad K_{req} = \frac{3P_e}{L} \left(\frac{d_o}{d} + 1\right) \qquad \text{(C-7)}$$

$$S_{req} = \frac{3P_e}{L} (d_o + d) = K_{id} (d_o + d) \qquad \text{(C-8)}$$

A final case for three intermediate supports has been analysed also, for interest refer to Winters[3] paper.

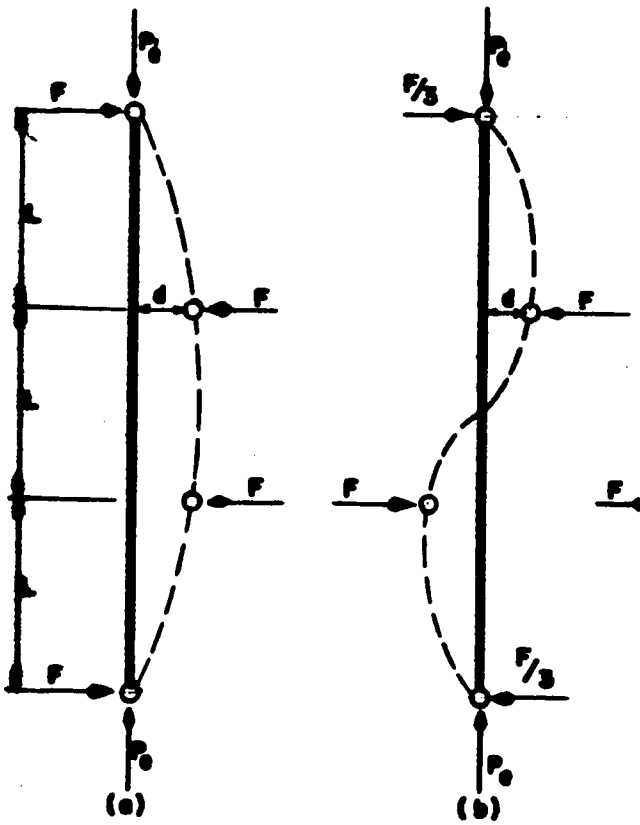

Figure 63 : MODES OF BUCKLING FOR AN IDEAL COLUMN BRACED WITH TWO EQUAL AND EQUIDISTANT SUPPORTS
(a) UN-FULL BRACED CASE
(b) FULL BRACED CASE

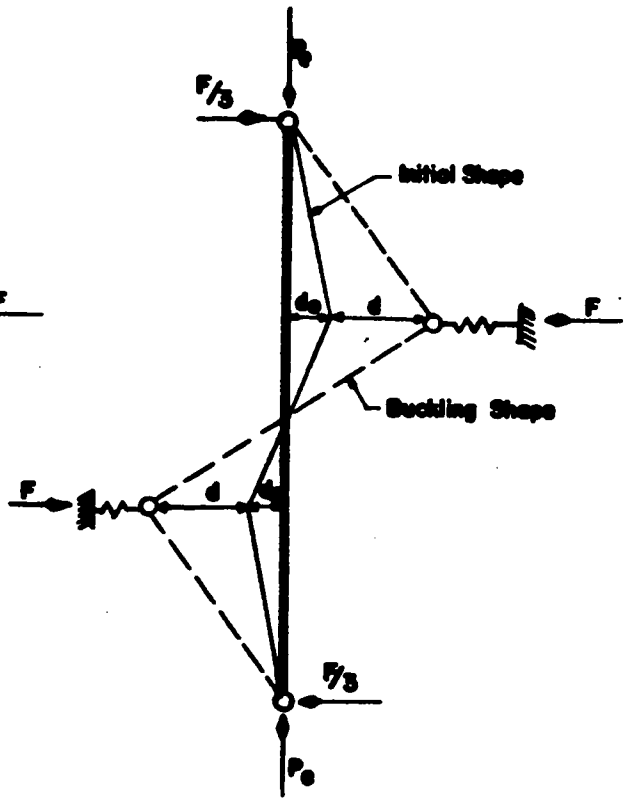

Figure 64: BUCKLING OF ACTUAL COLUMN BRACED WITH TWO EQUAL AND EQUIDISTANT SUPPORT

APPENDIX D : Evaluation of the theoretical brace force percentages by using Medlands[4] design charts

Notations and definitions to be used for analysis :

L = overall length of column = 106.7 in (Table 2)

I_y = column second moment of inertia = 0.151" (Table 2)

r_y = columns' radii of gyration at weak axis = 0.358" (Table 2)

a = distance between brace lines = 53.35" (for single bracing)
= 35.567"(for double bracing)

E = Young's modulus = 29×10^6 psi

P_{cr} = Critical buckling load :

$$(P_{cr})_{Euler} = (P_{cr})_{\text{by AISC*}} = \frac{\pi^2 E I_y}{a^3} = 15.13^k \text{ (for single bracing)}$$

$$\left.\begin{aligned} (P_{cr})_{Euler} &= \frac{\pi^2 E I_y}{a^2} = 34.2^k \\ (P_{cr})_{\text{by AISC*}} &= 29.13^k \text{ (govern)} \end{aligned}\right\} \text{(for double bracing)}$$

P = maximum experimental axial load (Chapter 3; these values are summarised in Table 13).

ℓ = Ratio of P/P_{cr}

ℓ_{cr} = Critical value of ℓ :

$$\ell_{cr} = 1.0 \quad \text{(for single bracing)}$$

$$\ell_{cr} = \frac{29.13}{34.2} = 0.85 \quad \text{(for double bracing)}$$

$\bar{p}$ = brace force as percentage of P (Figures 65, 66 and 67).

---

* Appendix E

TABLE 13 : Required terms to be used for the evaluation of the theoretical brace force percentages at the maximum experimental column loads

Exp* #	Max. Experimental Axial Load P kip	$\ell = \frac{P}{P_{cr}}$	Provided Brace Stiffness $b_{prov.} = (\frac{EA}{L})_{brace}$ lb/in x 10^3	$(F_u)_{exp.} = F_u X \frac{b_{prov.}}{b_{min.}}$
		(Single-interbraced system)		
2	8.23	0.54	260	137
3	11.83 (Buckling)	0.78	199	104
4	14.78 (Buckling)	0.97	164	86
5	12.47 (Buckling)	0.82	87	46
		(Double-interbraced system)		
6	21.01 (Buckling)	0.72	310	48
7	22.72 (Buckling)	0.78	149	23
8	23.82 (Buckling)	0.82	99	16

* Chapter 3 - Experimental results

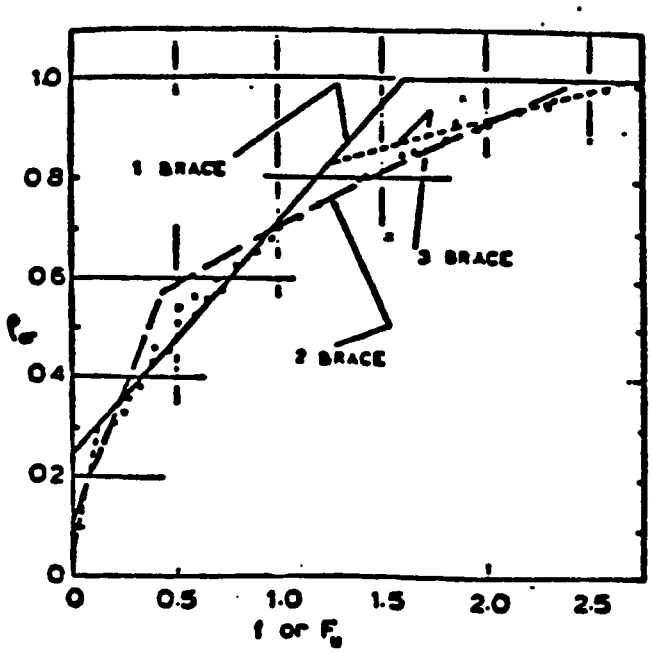

Figure 65 : Critical load, brace stiffness - uniform force (Fig. 3 - Medland).

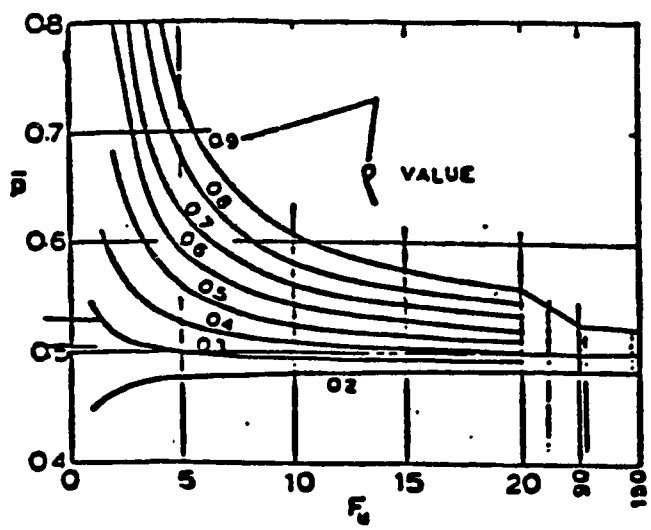

Figure 66 : Uniform force brace strength - 1 brace (Fig.10 - Medland)

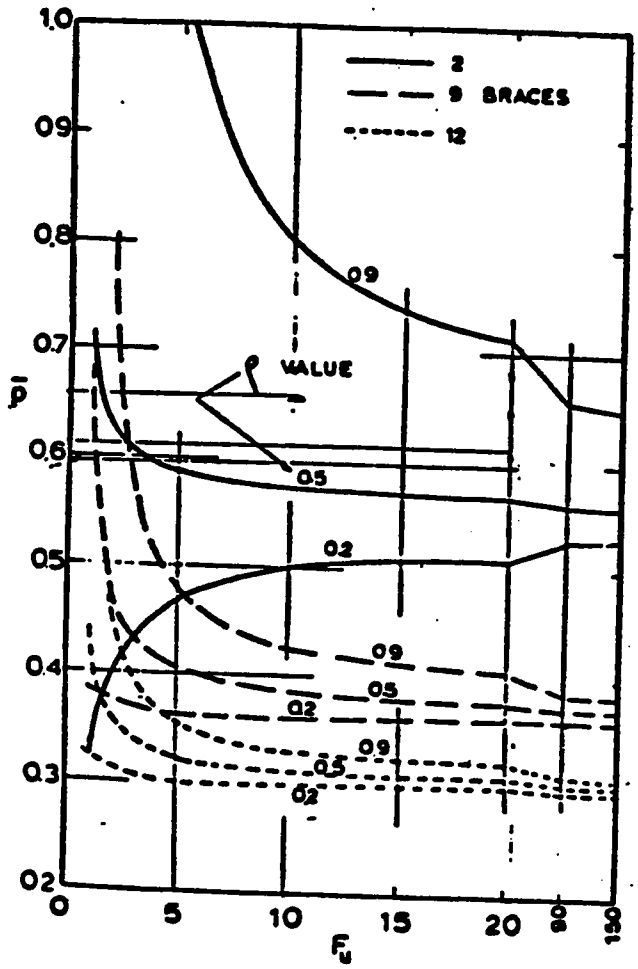

Figure 67 : Uniform force brace strength - other cases (Fig. 11 - Medland)

b_{min} = min. linear elastic stiffness of brace = $f(\frac{12EI_y}{a^3}) = Fud_u(\frac{12EI_y}{a^3})$

where : f = non-dimensional multiplier for brace stiffness (Fig. 65)

$\frac{12EI_y}{a^3}$ = 346.1 lb/in (for single bracing)

= 1167.9 lb/in (for double bracing)

F_u = modified f for multibay cases = f/du (Fig. 65)

n = number of bays between columns = 2

$d_u = 0.45\ n^2 + 1.35n + 1 = 5.5$

$\therefore b_{min} = 1903.55\ F_u = 3.093 \times 10^3$ lb/in, Fu = 1.625 (from Fig. 65 for 1 brace line - single bracing - and for $\ell_{cr} = 1$).

$b_{min} = 6423.45$ Fu $= 11.113 \times 10^3$ lb/in, Fu = 1.73 (from Fig. 65 for 2 brace line - double bracing - and for $\ell_{cr} = 0.85$)

Evaluation of brace force percentages at maximum column loads :

The brace force percentages are evaluated by using Figures 66 and 67 (for the values of ℓ and $(Fu)_{exp}$, see Table 13). All the results are presented in Chapter 4, Table 11.

Example : (Experiment # 3)

By using Fig. 66 with $F_u = (F_u)_{exp.} = 104$ (Table 13), ℓ = 0.78" (Table 13)

$\therefore \bar{p}$(for brace B3) = 0.53%; $\bar{p}$(for brace B2) = 0.53x2 = 1.06%;

$\bar{p}$(for brace B1) = 0.53x3 = 1.59%.

Evaluation of brace force percentages at the allowable column loads:

Similar analysis has been performed as for the evaluation of the force percentages at the maximum column loads. The results of this analysis are presented in Chapter 4, Table 12.

APPENDIX E : Evaluation of design (allowable) carrying loads and ultimate buckling loads for single experimental column (By AISC[8] Formulas)

(1) Formulas to be used : (Figures 68 and 69)

(a) $$F_{cr} = \frac{\pi^2 E}{(KL/r)^2} \qquad \text{(E-1)}$$

$$F_a = \frac{F_{cr}}{\text{Factor of safety (F.S.)}} = \frac{12F_{cr}}{23} \qquad \text{(E-2)}$$

for $(\frac{KL}{r}) > C_c$

(b) $$F_{cr} = F_y\left(1 - \frac{(KL/r)^2}{2C_c^2}\right) \qquad \text{(E-3)}$$

$$F_a = \frac{F_{cr}}{F.S.} = \frac{F_{cr}}{5/3 + \frac{3(KL/r)}{8C_c} - \frac{(KL/r)^3}{8C_c^3}} \qquad \text{(E-4)}$$

for $(\frac{KL}{r}) < C_c$

where : F_{cr} = ultimate buckling stress

F_a = allowable axial stress

F_y = yield stress = 36 ksi for A-36 steel

E = modulus of elasticity = 29×10^6 psi

$$C_c = \frac{2\pi^2 E}{F_y} = 126.099$$

(2) Evaluation of ultimate and allowable carrying load for a single unbraced experimental column (Figure 70) :

* $rx/ry = R = 3.52$ (for column properties see Table 2).
* $(KL)_y = 1 \times 106.7 = 106.7'' = (KL)_x$
* Equiv. $(KL)_y = \frac{(KL)_x}{R} = 30.31'' < (KL)_y$

$\therefore$ <u>weak axis controls</u>

* $(\frac{KL}{r})_y = 298.045 > C_c$ (Use eqns. E-1 & E-2)

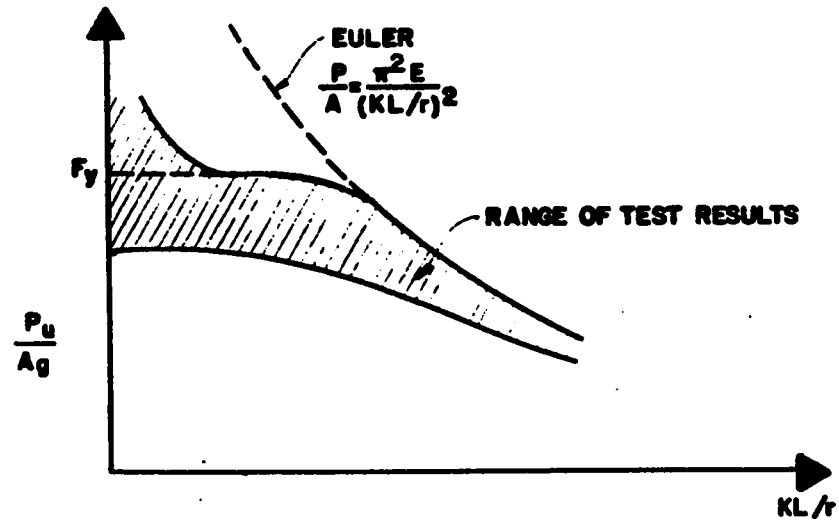

Figure 68: TYPICAL RANGE OF COLUMN STRENGTH vs. SLENDERNESS RATIOS

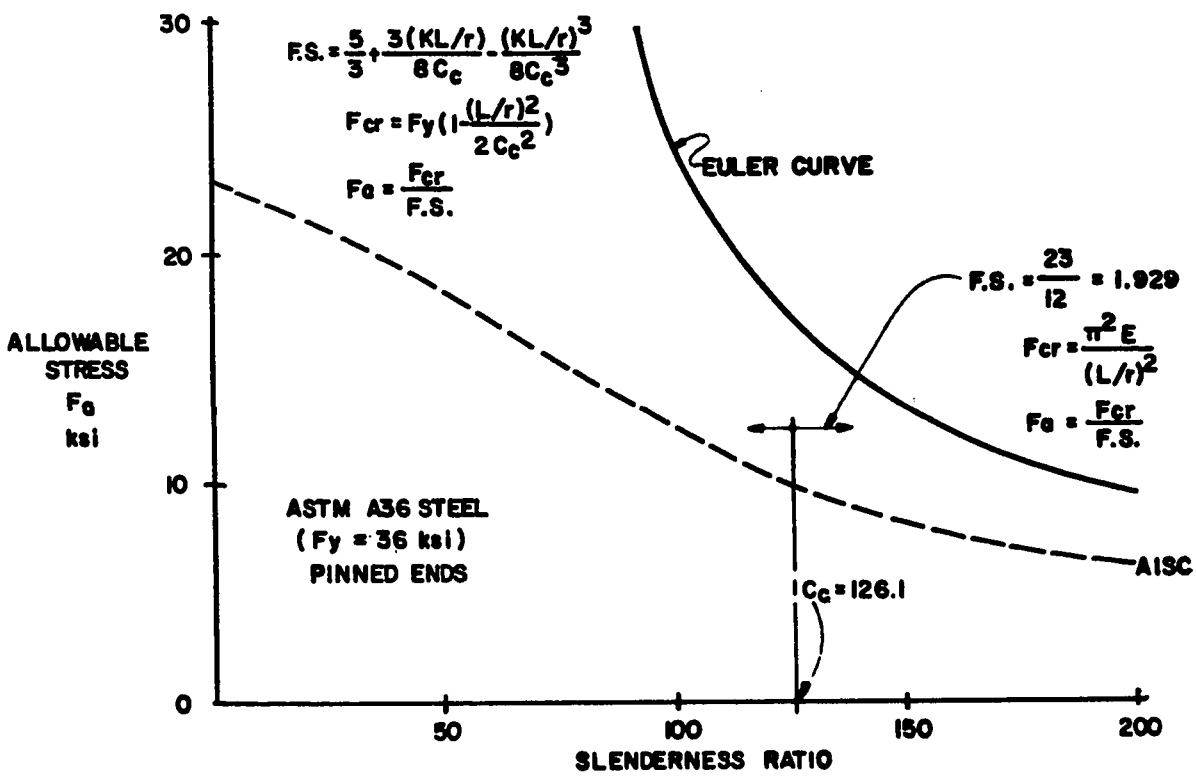

Figure 69 : COLUMN FORMULAS FOR AISC

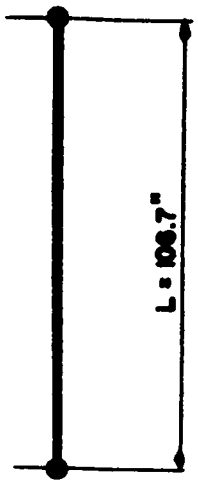

Figure 70 : DIAGRAM FOR SINGLE SIMPLY SUPPORTED UNBRACED EXPERIMENTAL COLUMN

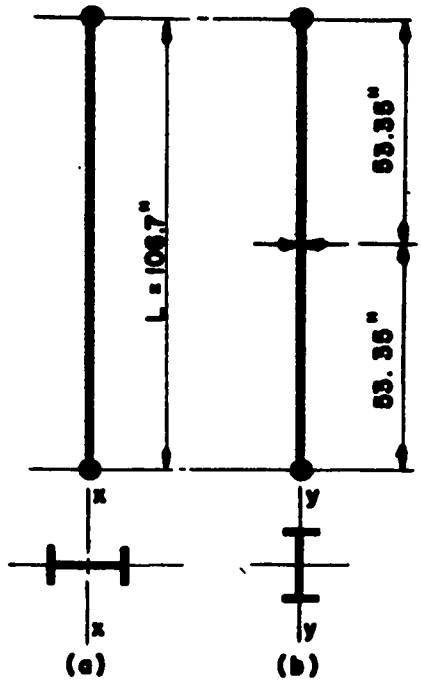

Figure 71 : DIAGRAM FOR SINGLE SIMPLY SUPPORTED EXP. COLUMN BRACED AT MID-HEIGHT
(a) STRONG AXIS
(b) WEAK AXIS

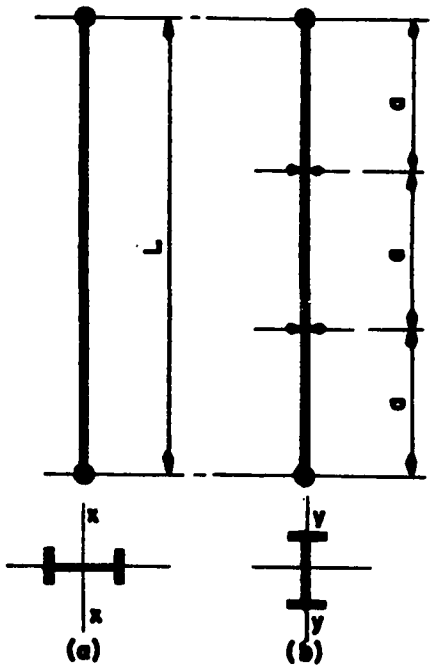

Figure 72 : DIAGRAM FOR SINGLE SIMPLY SUPPORTED EXP. COLUMN BRACED AT EACH ONE-THIRD LENGTH (a) STRONG AXIS (b) WEAK AXIS

$\therefore F_{cr} = 3.22$ ksi, $P_{cr} = F_{cr} \times A_{col.} = 3.78$ kip;

$F_a = 1.68$ ksi, $P_{allow.} = 1.97$ kip.(52.12% of P_{cr})

(3) Evaluation of ultimate and allowable carrying load for a single experimental column braced at its mid-height (Figure 71) :

* $(KL)_y = 1 \times 53.35 = 53.35''$, $L_y = 53.35''$
* $(KL)_x = 1 \times 106.7 = 106.7''$, $L_x = 106.7''$
* Equiv. $(KL)_y = \frac{(KL)_x}{R} = 30.31 < (KL)_y$

$\therefore$ <u>Weak axis controls</u>

* $(\frac{KL}{r})_y = 149.022 > C_c$ (Use eqns. E-1 & E-2)

$\therefore F_{cr} = 12.89$ ksi, $P_{cr} = 15.13$ kip;

$F_a = 6.73$ ksi , $P_{allow.} = 7.90$ kip (52.21% of P_{cr})

(4) Evaluation of ultimate and allowable carrying load for a single experimental column braced at each one-third length (Figure 72) :

* $(KL)_y = 1 \times 35.567'' = 35.567''$, $L_y = a = 35.567''$
* $(KL)_x = 1 \times 106.7'' = 106.7''$, $L_x = 106.7''$
* Equiv. $(KL)_y = \frac{(KL)_x}{R} = 30.31'' < 35.567''$

$\therefore$ <u>Weak axis controls</u>

* $(\frac{KL}{r})_y = 99.349 < C_c$ (Use eqns E-3 & E-4).

$\therefore F_{cr} = 24.83$ ksi , $P_{cr} = 29.13$ kip;

$F_a = 13.07$ ksi , $P_{allow} = 15.34$ kip (52.66% of P_{cr})

APPENDIX F : Computer outputs : Tables for brace force percentages

INTERBRACED-COLUMN SYSTEM
SINGLE BRACING

TABLE 14 : BRACE FORCE PERCENTAGES (FOR EXP. NO. 2)

LOADING STEPS	P(KIP.)	B1(LB.)	%P1	%P1T	B2(LB.)	%P2	%P2T	B3(LB.)	%P3	%P3T
1	-0.570	15.100	2.649	0.099	18.770	3.293	0.123	18.770	3.293	0.123
2	-1.290	9.060	0.702	0.060	18.770	1.455	0.123	25.030	1.940	0.165
3	-1.910	9.060	0.474	0.060	18.770	0.983	0.123	25.030	1.310	0.165
4	-3.130	3.020	0.096	0.020	6.260	0.200	0.041	25.030	0.800	0.165
5	-4.038	-21.140	-0.524	-0.139	-6.260	-0.155	-0.041	50.060	1.240	0.329
6	-5.680	-45.310	-0.798	-0.298	-12.510	-0.220	-0.082	31.290	0.551	0.206
7	-8.230	-84.580	-1.028	-0.556	-31.290	-0.380	-0.206	-6.260	-0.076	-0.041

NOTATIONS

+VE SIGNE = TENSION
-VE SIGNE =COMPRESSION
P=MEAN AVERAGE EXPERIMENTAL COLUMN LOAD
PE=THEORETICAL COLUMN BUCKLING LOAD =15.13KIP.
B1=BRACE FORCE OF BRACE B1
P1=%OF(B1/ P)
P1T=%OF (B1/PE)
NOTE:THE OTHER BRACES (B2&B3) ARE HAVING SIMILAR NOTATIONS AS B1

.... END ....

INTERBRACED-COLUMN SYSTEM
SINGLE BRACING

TABLE 15 : BRACE FORCE PERCENTAGES (FOR EXP. NO. 3)

LOADING STEPS	P(KIP.)	B1(LB.)	%P1	%P1T	B2(LB.)	%P2	%P2T	B3(LB.)	%P3	%P3T
1	-1.610	6.900	0.429	0.045	4.750	0.295	0.031	9.490	0.589	0.062
2	-3.150	9.210	0.292	0.061	4.750	0.151	0.031	14.240	0.452	0.094
3	-4.160	6.900	0.166	0.045	0.000	-0.000	0.000	9.490	0.228	0.062
4	-4.880	6.900	0.141	0.045	0.000	-0.000	0.000	4.750	0.097	0.031
5	-5.380	6.900	0.128	0.045	4.750	0.088	0.031	4.750	0.088	0.031
6	-6.230	9.210	0.148	0.061	4.750	0.076	0.031	9.490	0.152	0.062
7	-7.080	13.810	0.195	0.091	-4.750	-0.067	-0.031	9.490	0.134	0.062
8	-7.800	16.110	0.207	0.106	0.000	-0.000	0.000	14.240	0.183	0.094
9	-8.780	18.410	0.210	0.121	4.750	0.054	0.031	14.240	0.162	0.094
10	-9.730	25.320	0.260	0.167	0.000	-0.000	0.000	28.480	0.293	0.187
11	-10.560	34.520	0.327	0.227	-4.750	-0.045	-0.031	28.480	0.270	0.187
12	-11.090	41.420	0.373	0.272	0.000	-0.000	0.000	23.730	0.214	0.156
13	-11.320	39.120	0.346	0.257	4.750	0.042	0.031	18.990	0.168	0.125
14	-11.550	43.730	0.379	0.288	0.000	-0.000	0.000	14.240	0.123	0.094
15	-11.750	46.030	0.392	0.303	9.490	0.081	0.062	33.230	0.283	0.219
16	-11.830	48.330	0.409	0.318	18.990	0.161	0.125	66.460	0.562	0.437

NOTATIONS

+VE SIGNE = TENSION
-VE SIGNE =COMPRESSION
P=MEAN AVERAGE EXPERIMENTAL COLUMN LOAD
PE=THEORETICAL COLUMN BUCKLING LOAD =15.13 KIP.
B1=BRACE FORCE OF BRACE B1
P1=%OF (B1/ P)
P1T=%OF (B1/PE)
NOTE:THE OTHER BRACES (B2&B3) ARE HAVING SIMILAR NOTATIONS AS B1

.... END ....

INTERBRACED-COLUMN SYSTEM
SINGLE BRACING

TABLE 16 : BRACE FORCE PERCENTAGES (FOR EXP. NO. 4)

LOADING STEPS	P(KIP.)	B1(LB.)	%P1	%P1T	B2(LB.)	%P2	%P2T	B3(LB.)	%P3	%P3T
1	-1.960	-53.160	-2.712	-0.350	-77.670	-3.963	-0.511	-69.910	-3.567	-0.460
2	-3.370	-75.950	-2.254	-0.500	-112.630	-3.342	-0.741	-104.860	-3.112	-0.690
3	-4.950	-87.340	-1.764	-0.575	-124.260	-2.511	-0.818	-112.630	-2.275	-0.741
4	-6.610	-93.030	-1.407	-0.612	-124.280	-1.880	-0.818	-120.390	-1.821	-0.792
5	-8.360	-98.730	-1.181	-0.650	-135.930	-1.626	-0.894	-124.280	-1.487	-0.818
6	-10.130	-110.120	-1.087	-0.724	-151.460	-1.495	-0.996	-147.580	-1.457	-0.971
7	-13.340	-121.510	-0.911	-0.799	-163.110	-1.223	-1.073	-167.000	-1.252	-1.099
8	-13.790	-138.600	-1.005	-0.912	-167.000	-1.211	-1.099	-167.000	-1.211	-1.099
9	-14.310	-136.700	-0.955	-0.899	-167.000	-1.167	-1.099	167.000	1.167	1.099
10	-14.520	-142.400	-0.981	-0.937	178.650	1.230	1.175	-186.420	-1.284	-1.226
11	-14.780	-159.480	-1.079	-1.049	-182.530	-1.235	-1.201	-209.720	-1.419	-1.380

NOTATIONS

+VE SIGNE = TENSION
-VE SIGNE =COMPRESSION
P=MEAN AVERAGE EXPERIMENTAL COLUMN LOAD
PE=THEORETICAL COLUMN BUCKLING LOAD =15.13 KIP.
B1=BRACE FORCE OF BRACE B1
P1=%OF(B1/ P)
P1T=%OF (B1/PE)
NOTE:THE OTHER BRACES (B2&B3) ARE HAVING SIMILAR NOTATIONS AS B1

.... END ....

INTERBRACED-COLUMN SYSTEM
SINGLE BRACING

TABLE 17 : BRACE FORCE PERCENTAGES (FOR EXP. NO. 5)

LOADING STEPS	P(KIP.)	B1(LB.)	%P1	%P1T	B2(LB.)	%P2	%P2T	B3(LB.)	%P3	%P3T
1	-1.650	-4.030	-0.218	-0.027	-10.250	-0.554	-0.067	-6.150	-0.332	-0.040
2	-2.600	2.010	0.077	0.013	-18.440	-0.709	-0.121	-10.250	-0.394	-0.067
3	-3.580	5.030	0.141	0.033	-20.490	-0.572	-0.135	-14.350	-0.401	-0.094
4	-4.900	9.060	0.185	0.060	-24.590	-0.502	-0.162	-20.490	-0.418	-0.135
5	-6.580	13.090	0.199	0.086	-32.790	-0.498	-0.216	-30.740	-0.467	-0.202
6	-8.300	13.090	0.156	0.086	-40.990	-0.494	-0.270	-40.990	-0.494	-0.270
7	-9.070	14.090	0.155	0.093	-47.140	-0.520	-0.310	-43.040	-0.475	-0.283
8	-9.990	10.070	0.101	0.066	-55.330	-0.554	-0.364	-51.240	-0.513	-0.337
9	-10.760	10.070	0.094	0.066	-59.430	-0.552	-0.391	-53.280	-0.495	-0.351
10	-11.430	6.040	0.053	0.040	-63.530	-0.556	-0.418	-57.380	-0.502	-0.377
11	-11.850	4.030	0.034	0.027	-69.680	-0.588	-0.458	-61.480	-0.519	-0.404
12	-12.180	2.010	0.017	0.013	-69.680	-0.572	-0.458	-63.530	-0.522	-0.418
13	-12.470	1.010	0.008	0.007	-69.680	-0.559	-0.458	-65.580	-0.526	-0.431

NOTATIONS

+VE SIGNE = TENSION
-VE SIGNE =COMPRESSION
P=MEAN AVERAGE EXPERIMENTAL COLUMN LOAD
PE=THECKETICAL COLUMN BUCKLING LOAD =15.13 KIP.
B1=BRACE FORCE OF BRACE B1
P1=%OF(B1/ P)
P1T=%OF (B1/PE)
NOTE:THE OTHER BRACES (B2&B3) ARE HAVING SIMILAR NOTATIONS AS B1

.... END ....

INTERBRACED-COLUMN SYSTEM
DOUBLE BRACING

TABLE 18 :BRACE FORCE PERCENTAGES (FOR EXP. NO.6)
NOTE:FIRST PART OF THE TABLE IS FOR THE TOP BRCE LINE(B)

LOADING STEPS	P(KIP.)	B1(LB.)	%P1	%P1T	B2(LB.)	%P2	%P2T	B3(LB.)	%P3	%P3T
1	-3.620	-43.150	-1.192	-0.148	-66.020	-1.824	-0.227	7.340	0.203	0.025
2	-6.920	-71.920	-1.039	-0.247	-95.370	-1.378	-0.327	14.670	0.212	0.050
3	-10.190	-97.090	-0.953	-0.333	-124.710	-1.224	-0.428	14.670	0.144	0.050
4	-13.510	-122.260	-0.905	-0.420	-124.710	-0.923	-0.428	36.680	0.272	0.126
5	-15.140	-133.050	-0.879	-0.457	-154.050	-1.018	-0.529	22.010	0.145	0.076
6	-16.910	-143.840	-0.851	-0.494	-154.050	-0.911	-0.529	22.010	0.130	0.076
7	-18.630	-158.220	-0.849	-0.543	-190.730	-1.024	-0.655	-29.340	-0.157	-0.101
8	-20.550	-204.970	-0.997	-0.704	-212.740	-1.035	-0.730	-14.670	-0.071	-0.050
9	-21.010	-409.940	-1.951	-1.407	-469.490	-2.235	-1.612	-293.430	-1.397	-1.007
1	-3.620	-28.770	-0.795	-0.099	44.010	1.216	0.151	58.690	1.621	0.201
2	-6.920	-53.940	-0.779	-0.185	44.010	0.636	0.151	73.360	1.060	0.252
3	-10.190	-89.900	-0.882	-0.309	80.690	0.792	0.277	110.040	1.080	0.378
4	-13.510	-111.480	-0.825	-0.383	110.040	0.815	0.378	132.050	0.977	0.453
5	-15.140	-129.460	-0.855	-0.444	102.700	0.678	0.353	168.720	1.114	0.579
6	-16.910	-125.860	-0.744	-0.432	110.040	0.651	0.378	190.730	1.128	0.655
7	-18.630	-140.240	-0.753	-0.481	102.700	0.551	0.353	168.720	0.906	0.579
8	-20.550	-186.990	-0.910	-0.642	132.050	0.643	0.453	234.750	1.142	0.806
9	-21.010	-222.950	-1.061	-0.765	381.400	1.816	1.310	476.830	2.270	1.637

NOTATIONS

+VE SIGNE = TENSION
-VE SIGNE =COMPRESSION
P=MEAN AVERAGE EXPERIMENTAL COLUMN LOAD
PE=THEORETICAL COLUMN BUCKLING LOAD =29.13 KIP.
B1=BRACE FORCE OF BRACE B1
P1=%OF(B1/ P)
P1T=%OF (B1/PE)
NOTE:THE OTHER BRACES (B2&B3) ARE HAVING SIMILAR NOTATIONS AS B1

.... END ....

INTERBRACED-COLUMN SYSTEM
DOUBLE BRACING

TABLE 19 :BRACE FORCE PERCENTAGES (FOR EXP. NO. 7)
NOTE:FIRST PART OF THE TABLE IS FOR THE TOP BRCE LINE(B)

LOADING STEPS	P(KIP.)	B1(LB.)	%P1	%P1T	B2(LB.)	%P2	%P2T	B3(LB.)	%P3	%P3T
1	-3.390	-22.450	-0.662	-0.077	-31.600	-0.932	-0.108	24.580	0.725	0.084
2	-6.870	6.910	0.101	0.024	-7.020	-0.102	-0.024	56.160	0.818	0.193
3	-10.300	25.900	0.251	0.089	24.580	0.239	0.084	87.780	0.852	0.301
4	-13.690	39.720	0.290	0.136	45.640	0.333	0.157	108.840	0.795	0.374
5	-15.470	51.810	0.335	0.176	66.710	0.431	0.229	126.400	0.817	0.434
6	-17.100	53.540	0.313	0.184	66.710	0.390	0.229	126.400	0.739	0.434
7	-18.740	63.900	0.341	0.219	94.600	0.506	0.325	140.440	0.749	0.482
8	-20.460	82.890	0.405	0.285	101.620	0.496	0.350	154.480	0.755	0.530
9	-22.120	126.070	0.570	0.433	143.950	0.651	0.494	186.080	0.841	0.639
10	-22.720	143.340	0.631	0.492	161.510	0.711	0.554	193.110	0.850	0.663
1	-3.390	3.450	0.102	0.012	-10.530	-0.311	-0.036	14.040	0.414	0.048
2	-6.870	-3.450	-0.050	-0.012	-42.120	-0.613	-0.145	31.600	0.460	0.108
3	-10.300	-10.360	-0.101	-0.036	-73.730	-0.716	-0.253	42.130	0.409	0.145
4	-13.690	-15.540	-0.114	-0.053	-91.290	-0.667	-0.313	56.180	0.410	0.193
5	-15.470	-17.270	-0.112	-0.059	-101.820	-0.658	-0.350	66.710	0.431	0.229
6	-17.100	-19.000	-0.111	-0.065	-115.860	-0.678	-0.398	66.710	0.390	0.229
7	-18.740	-20.720	-0.111	-0.071	-126.400	-0.674	-0.434	73.730	0.393	0.253
8	-20.460	-29.360	-0.143	-0.101	-166.530	-0.624	-0.579	87.780	0.429	0.301
9	-22.120	-50.080	-0.226	-0.172	-221.190	-1.000	-0.759	207.150	0.936	0.711
10	-22.720	-60.440	-0.266	-0.207	-245.770	-1.082	-0.844	238.750	1.051	0.820

NOTATIONS

+VE SIGNE = TENSION
-VE SIGNE =COMPRESSION
P=MEAN AVERAGE EXPERIMENTAL COLUMN LOAD
PE=THEORETICAL COLUMN BUCKLING LOAD =29.13 KIP.
B1=BRACE FORCE OF BRACE B1
P1=%OF(B1/ P)
P1T=%OF (B1/PE)
NOTE:THE OTHER BRACES (B2&B3) ARE HAVING SIMILAR NOTATIONS AS B1

.... END ....

INTERBRACED-COLUMN SYSTEM
DUBLE BRACING

TABLE 20: BRACE FORCE PERCENTAGES (FOR EXP. NO.8)
NOTE: FIRST PART OF THE TABLE IS FOR THE TOP BRCE LINE(B)

LOADING STEPS	P(KIP.)	B1(LB.)	%P1	%P1T	B2(LB.)	%P2	%P2T	B3(LB.)	%P3	%P3T
1	-3.710	-5.760	-0.155	-0.020	-9.490	-0.256	-0.033	-28.470	-0.767	-0.098
2	-7.180	10.360	0.144	0.036	-11.860	-0.165	-0.041	-54.560	-0.760	-0.187
3	-10.960	35.690	0.326	0.123	-7.120	-0.065	-0.024	-78.280	-0.714	-0.269
4	-13.580	56.410	0.415	0.194	-2.370	-0.017	-0.008	-111.490	-0.821	-0.383
5	-15.210	66.770	0.439	0.229	-11.860	-0.078	-0.041	-123.350	-0.811	-0.423
6	-16.810	82.890	0.493	0.285	2.370	0.014	0.008	-135.220	-0.804	-0.464
7	-18.780	100.160	0.533	0.344	0.000	-0.000	0.000	-147.080	-0.783	-0.505
8	-20.450	112.830	0.552	0.387	16.610	0.081	0.057	-163.080	-0.800	-0.562
9	-22.120	126.640	0.573	0.435	21.350	0.097	0.073	-180.290	-0.815	-0.619
10	-23.820	144.200	0.605	0.495	28.300	0.119	0.097	-196.420	-0.825	-0.674
1	-3.710	3.450	0.093	0.012	-7.120	-0.192	-0.024	4.740	0.128	0.016
2	-7.180	-12.660	-0.176	-0.043	-16.610	-0.231	-0.057	14.230	0.198	0.049
3	-10.960	-28.780	-0.263	-0.099	-18.980	-0.173	-0.065	26.470	0.260	0.098
4	-13.580	-49.900	-0.367	-0.171	-23.720	-0.175	-0.081	33.210	0.245	0.114
5	-15.210	-57.570	-0.379	-0.198	-33.210	-0.218	-0.114	35.580	0.234	0.122
6	-16.810	-64.470	-0.384	-0.221	-37.960	-0.226	-0.130	42.700	0.254	0.147
7	-18.780	-86.350	-0.460	-0.296	-47.440	-0.253	-0.163	54.560	0.291	0.187
8	-20.450	-94.410	-0.462	-0.324	-54.560	-0.267	-0.187	64.050	0.313	0.220
9	-22.120	-112.830	-0.510	-0.387	-59.310	-0.268	-0.204	75.910	0.343	0.261
10	-23.820	-128.380	-0.539	-0.441	-66.710	-0.280	-0.229	86.420	0.363	0.297

NOTATIONS

+VE SIGNE = TENSION
-VE SIGNE =COMPRESSION
P=MEAN AVERAGE EXPERIMENTAL COLUMN LOAD
PE=THEORETICAL COLUMN BUCKLING LOAD =29.13 KIP.
B1=BRACE FORCE OF BRACE B1
P1=%OF(B1/ P)
P1T=%OF (B1/PE)
NOTE: THE OTHER BRACES (B2&B3) ARE HAVING SIMILAR NOTATIONS AS B1

.... END ....

APPENDIX G : Sample test on evaluation of Young's modulus of elasticity (E) for experimental column material

The present test had been performed on a piece cut and shaped from one unused experimental column web. The strain values plotted in Figure 73 (load-strain diagram) are the average readings of two single strain gages fixed at the center of the specimens as shown in Figure 79.

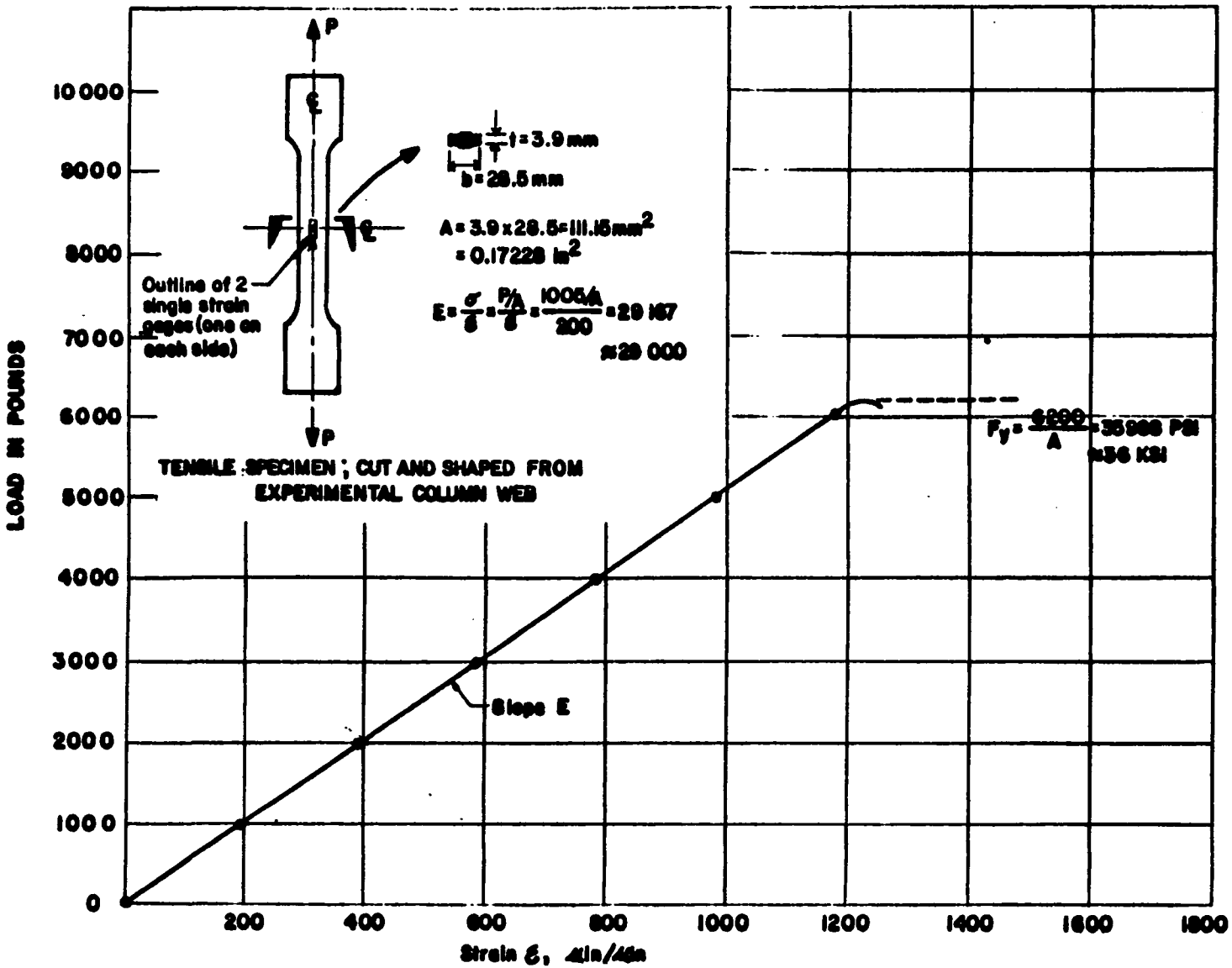

Figure 73 : LOAD - STRAIN DIAGRAM

APPENDIX H

Tables for Experimental Brace Properties

TABLE 4 : BRACE PROPERTIES & SYSTEM LAYOUT

Experiment No. 2 (Single Bracing)

Estimated Brace Buckling Load $= \frac{(313)^{\#} \times 10^{-3}}{15.13} \times 100 = 2.07$ % of the Theoretical Axial Column Buckling Load . $\left[Pcr_{Col.} \text{(theoretical)} = 15.13^{\circledcirc} \text{(Kip)} \right]$

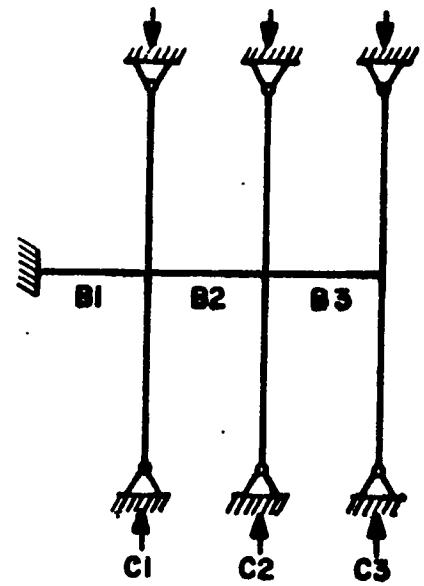

SYSTEM LAYOUT

BRACE PROPERTIES:

BRACE	Length (L)	Width (b)	Thickness (t)	Cross Sect. Area	I x-x	E	Brace Theo. Buckling Load	Cross Section
	in.	cm. / in.	mm. / in.	cm.^{2} / in.^{2}	x 10^{-4} in.^{4}	x 10^6 psi	$(Pcr)_{Br.} = \frac{\pi^2 E I_{x-x}}{L^2}$ lb.	
B1	11.6	2.1	3.2	0.672	1.3769	29	293	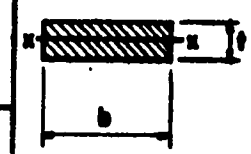
		0.826	0.126	0.104				
B2 & B3	23.6	2.9	4.8	1.392	6.4249	29	333	
		1.142	0.189	0.216			$\therefore (Pcr)_{Br.}$ average $= (313)^{\#}$	

⊙ Appendix E

TABLE 5 : BRACE PROPERTIES & SYSTEM LAYOUT

Experiment No. 3 (Single Bracing)

Estimated Brace Buckling Load $= \frac{(238)^{\#} \times 10^{-3}}{15.13} \times 100 = 1.57$ % of the Theoretical Axial Column Buckling Load . $\left[P_{cr_{Col.}} \text{(theoretical)} = 15.13^{◎} \text{(Kip)} \right]$

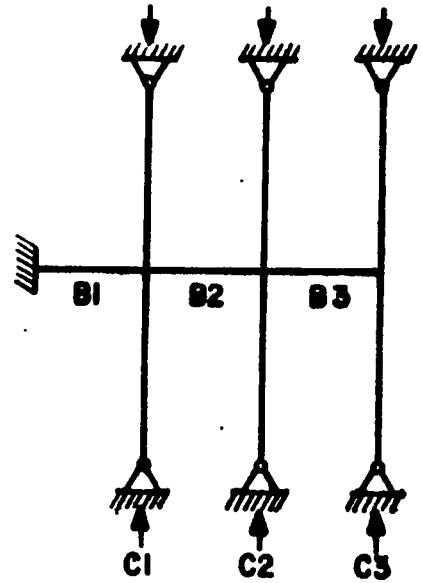

SYSTEM LAYOUT

BRACE PROPERTIES:

BRACE	Length (L)	Width (b)	Thickness (t)	Cross Sect. Area	I x-x	E	Brace Theo. Buckling Load	Cross Section
	in.	cm. / in.	mm. / in.	cm.^{2} / in.^{2}	$\times 10^{-4}$ in.^{4}	$\times 10^6$ psi	$(P_{cr})_{Br.} = \frac{\pi^2 E I_{x-x}}{L^2}$ lb.	
B1	11.6	1.6	3.2	0.512	1.0502	29	223	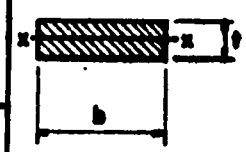
		0.630	0.126	0.0794				
B2 & B3	23.5	2.2	4.8	1.056	4.8722	29	.253	
		0.866	0.189	0.164			$\therefore (P_{cr})_{Br.}$ average $= (238)^{\#}$	

◎Appendix E

TABLE 6 : BRACE PROPERTIES & SYSTEM LAYOUT

Experiment No. 4 (Single Bracing)

Estimated Brace Buckling Load $= \frac{(196)^{*} \times 10^{-3}}{15.13} \times 100 = 1.29$ % of the Theoretical Axial Column Buckling Load . $\left[P_{cr_{Cal.}} \text{(theoretical)} = 15.13^{◎} \text{(Kip)} \right]$

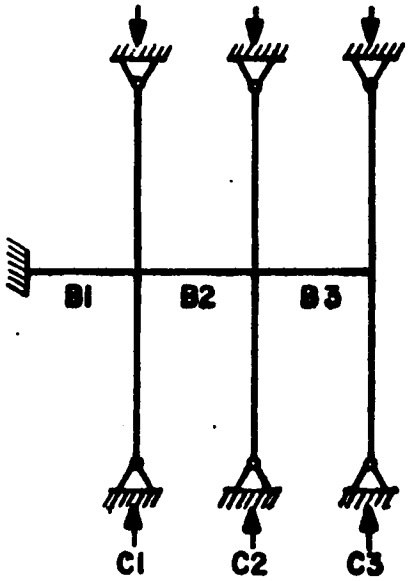

SYSTEM LAYOUT

BRACE PROPERTIES:

BRACE	Length (L)	Width (b)	Thickness (t)	Cross Sect. Area	I x-x	E	Brace Theo. Buckling Load	Cross Section
	in.	cm. / in.	mm. / in.	$cm.^2$ / $in.^2$	$\times 10^{-4}$ $in.^4$	$\times 10^{6}$ psi	$(P_{cr})_{Br.} = \frac{\pi^2 E I_{x-x}}{L^2}$ lb.	
B1	11.6	1.32	3.2	0.423	0.8668	29	184	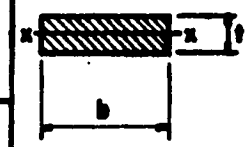
		0.520	0.126	0.0655				
B2 & B3	23.5	1.80	4.8	0.864	3.9889	29	207	
		0.709	0.189	0.134			$\therefore (P_{cr})_{Br.}$ average $= (196)^{*}$	

◎ Appendix E

TABLE 7 : BRACE PROPERTIES & SYSTEM LAYOUT

Experiment No. 5 (Single Bracing)

Estimated Brace Buckling Load $= \frac{(103)^{*} \times 10^{-3}}{15.13} \times 100 = 0.68$ % of the Theoretical Axial Column Buckling Load . $\left[Pcr_{Col.}(\text{theoretical}) = 15.13^{◎} (\text{Kip}) \right]$

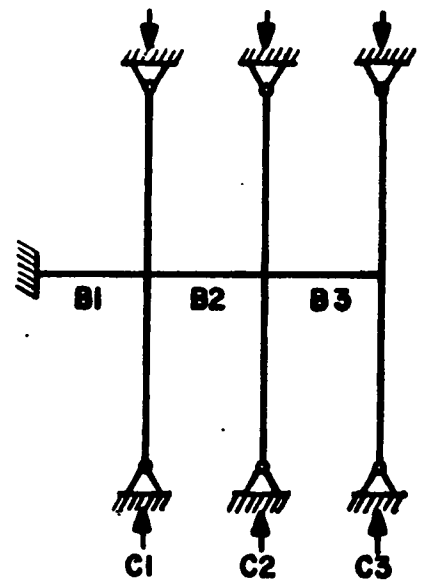

SYSTEM LAYOUT

BRACE PROPERTIES:

BRACE	Length (L) in.	Width (b) cm. / in.	Thickness (t) mm. / in.	Cross Sect. Area cm.^{2} / in.^{2}	I x-x $\times 10^{-4}$ in.^{4}	E $\times 10^{6}$ psi	Brace Theo. Buckling Load $(Pcr)_{Br.} = \frac{\pi^2 E I_{x-x}}{L^2}$ lb.	Cross Section
B1	11.6	0.70	3.2	0.224	0.4584	29	98	
		0.275	0.126	0.0347				
B2 & B3	23.5	0.95	4.9	0.456	2.1042	29	109	
		0.374	0.189	0.0707			$\therefore (Pcr)_{Br.}$ average $= (103)^{*}$	

◎ Appendix E .

TABLE 8 : BRACE PROPERTIES & SYSTEM LAYOUT

Experiment No. 6 (Double Bracing)

Estimated Brace Buckling Load = $\frac{(369)^{*} \times 10^{-3}}{29.13} \times 100 =$ 1.27% of the Theoretical Axial Column Buckling Load. [$P_{cr_{Col.}}$ (theoretical) = 29.13 ◎ (Kip)]

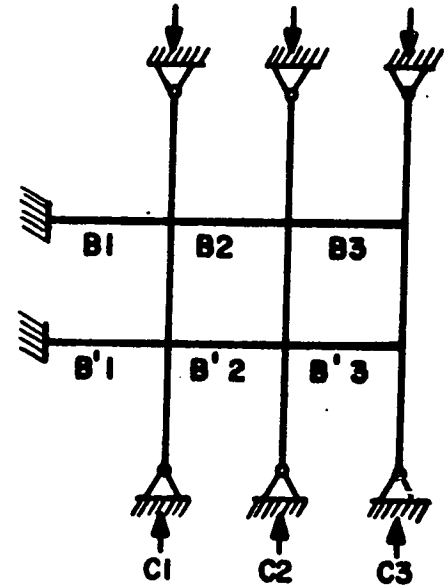

SYSTEM LAYOUT

BRACE PROPERTIES:

BRACE	Length (L) in.	Width (b) cm. / in.	Thickness (t) mm. / in.	Cross Sect. Area cm^2 / $in.^2$	I x-x $\times 10^{-4}$ $in.^4$	E $\times 10^6$ psi	Brace Theo. Buckling Load $(P_{cr})_{Br.} = \frac{\pi^2 E I_{x-x}}{L^2}$ lb.	Cross Section
B1 & B'1	11.6	2.5	3.2	0.800	1.6403	29	349	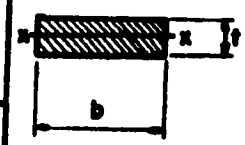
		0.984	0.126	0.124				
B2, B3 & B'2, B'3	23.5	3.4	4.8	1.632	7.5333	29	390	
		1.339	0.189	0.253			∴ $(P_{cr})_{Br.}$ average = (369)*	

◎ Appendix E

TABLE 9 : BRACE PROPERTIES & SYSTEM LAYOUT

Experiment No. 7 (Double Bracing)

Estimated Brace Buckling Load = $\frac{(\ 177\ )^{*} \times 10^{-3}}{29.13} \times 100 =$ 0.61 % of the Theoretical Axial Column Buckling Load. $\left[P_{cr_{Col.}} (\text{theoretical}) = 29.13^{\circledcirc} (\text{Kip}) \right]$

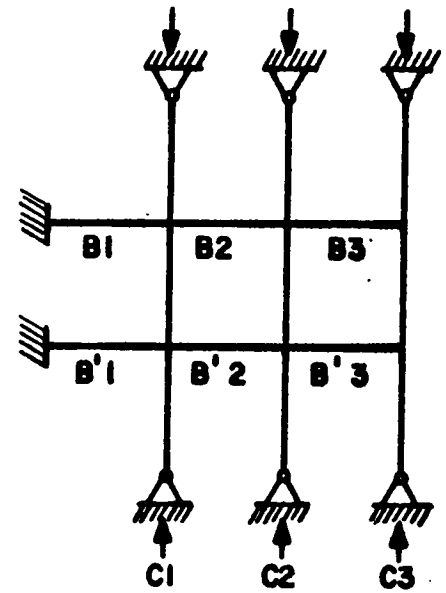

SYSTEM LAYOUT

BRACE PROPERTIES:

BRACE	Length (L)	Width (b)	Thickness (t)	Cross Sect. Area	I x-x	E	Brace Theo. Buckling Load	Cross Section
	in.	cm. / in.	mm. / in.	cm^2 / $in.^2$	$\times 10^{-4}$ $in.^4$	$\times 10^{6}$ psi	$(P_{cr})_{Br.} = \frac{\pi^2 E I_{x-x}}{L^2}$ lb.	
B1 & B'1	11.6	1.2	3.2	0.384	0.7885	29	168	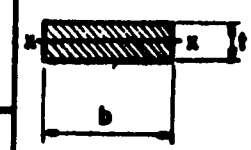
		0.473	0.126	0.0596				
B2, B3 & B'2, B'3	23.5	1.63	4.8	0.782	3.6119	29	187	
		0.642	0.189	0.121			$\therefore (P_{cr})_{Br.}$ average = (177)*	

◎ Appendix E

TABLE 10 : BRACE PROPERTIES & SYSTEM LAYOUT

Experiment No. 8 (Double Bracing)

Estimated Brace Buckling Load = $\frac{(\ 119\ )^{*} \times 10^{-3}}{29.13} \times 100 =$ 0.41% of the Theoretical Axial Column Buckling Load. [$P_{cr_{Col.}}$ (theoretical) = 29.13◎ (Kip)]

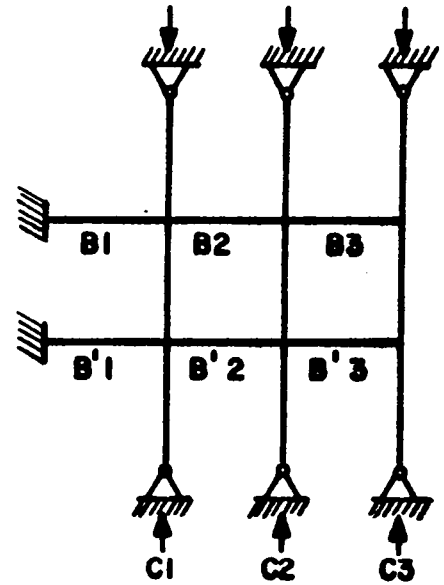

SYSTEM LAYOUT

BRACE PROPERTIES:

BRACE	Length (L) in.	Width (b) cm. / in.	Thickness (t) mm. / in.	Cross Sect. Area cm.^{2} / in.^{2}	I x-x x 10^{-4} in.^{4}	E x 10^6 psi	Brace Theo. Buckling Load $(P_{cr})_{Br.} = \frac{\pi^2 E I_{x-x}}{L^2}$ lb.	Cross Section
B1 & B'1	11.6	0.8	3.2	0.256	0.5251	29	112	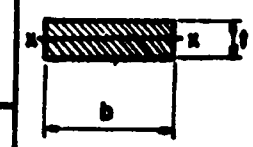
		0.315	0.126	0.0397				
B2, B3 & B'2, B'3	23.5	1.1	4.8	0.528	2.4361	29	126	
		0.433	0.189	0.0818			∴ $(P_{cr})_{Br.}$ average = (119)*	

◎ Appendix E