Performance of TCM with Concatenated Codes Over Fading Channels

by

Saud Ahmad Al-Semari

A Thesis Presented to the

FACULTY OF THE COLLEGE OF GRADUATE STUDIES

KING FAHD UNIVERSITY OF PETROLEUM & MINERALS

DHAHRAN, SAUDI ARABIA

In Partial Fulfillment of the
Requirements for the Degree of

MASTER OF SCIENCE

In

ELECTRICAL ENGINEERING

July, 1992

INFORMATION TO USERS

This manuscript has been reproduced from the microfilm master. UMI films the text directly from the original or copy submitted. Thus, some thesis and dissertation copies are in typewriter face, while others may be from any type of computer printer.

The quality of this reproduction is dependent upon the quality of the copy submitted. Broken or indistinct print, colored or poor quality illustrations and photographs, print bleedthrough, substandard margins, and improper alignment can adversely affect reproduction.

In the unlikely event that the author did not send UMI a complete manuscript and there are missing pages, these will be noted. Also, if unauthorized copyright material had to be removed, a note will indicate the deletion.

Oversize materials (e.g., maps, drawings, charts) are reproduced by sectioning the original, beginning at the upper left-hand corner and continuing from left to right in equal sections with small overlaps. Each original is also photographed in one exposure and is included in reduced form at the back of the book.

Photographs included in the original manuscript have been reproduced xerographically in this copy. Higher quality 6" x 9" black and white photographic prints are available for any photographs or illustrations appearing in this copy for an additional charge. Contact UMI directly to order.

U·M·I

University Microfilms International
A Bell & Howell Information Company
300 North Zeeb Road, Ann Arbor, MI 48106-1346 USA
313/761-4700 800/521-0600

Order Number 1354076

Performance of TCM with concatenated codes over fading channels

Al-Semari, Saud Ahmad, M.S.

King Fahd University of Petroleum and Minerals (Saudi Arabia), 1992

U·M·I
300 N. Zeeb Rd.
Ann Arbor, MI 48106

PERFORMANCE OF TCM WITH CONCATENATED CODES OVER FADING CHANNELS

BY

SAUD AHMAD AL-SEMARI

A Thesis Presented to the

FACULTY OF THE COLLEGE OF GRADUATE STUDIES

KING FAHD UNIVERSITY OF PETROLEUM & MINERALS

DHAHRAN, SAUDI ARABIA

In Partial Fulfillment of the
Requirements for the Degree of

MASTER OF SCIENCE

In

ELECTRICAL ENGINEERING

JUNE 1992

KING FAHD UNIVERSITY OF PETROLEUM & MINERALS

DHAHRAN, SAUDI ARABIA

This thesis, written by **SAUD AHMAD AL-SEMARI** *under the direction of his Thesis Advisor, and approved by his Thesis Committee, has been presented to and accepted by the Dean of the College of Graduate Studies, in partial fulfillment of the requirements for the degree of*

MASTER OF SCIENCE IN ELECTRICAL ENGINEERING

Thesis Committee

Chairman (Dr. K. M. Biyari)

Co-chairman (Dr. M. S. El-Hennawey)

Member (Dr. M. Dawoud)

Member (Dr. E. Hassan)

Department Chairman

Dean College of Graduate Studies

Date : 5-7-92

كلية الدراسات العليا
COLLEGE OF GRADUATE STUDIES

To my beloved parents, brothers, and sisters;
To those who shared their care and concern

ACKNOWLEDGEMENT

First of all, praise be to "*ALLAH*" whose help made it possible to complete this research.

Acknowledgement is due to King Fahd University of Petroleum and Minerals for support of this research.

I wish to express my sincere gratitude to my thesis advisor, *Dr. Khaled H. Biyari*, for his patient guidance and his generous support during the course of this work. I would like to express my deep appreciation to *Dr. M. Samy El-Hennawey*, my thesis co-advisor, and to the other committe members, *Dr. Mahmoud M. Dawoud* and *Dr. Essam E. M. Hassan*, for their valuable suggestions, helpful remarks, and kind co-operation.

Thanks to all my friends and colleagues for their support and help to complete this work.

Finally, special thanks to my parents, brothers, and sisters for their encouragement, inspiration and unselfish support during my studies.

خلاصة الرسالة

اسم الطالب : سعود أحمد السماري

عنوان الرسالة

تقييم الأداء لنظم التضمين المشفر والشفرات الخارجية على القنوات الذاويه

التخصص : الهندسة الكهربائية

تاريخ الدرجة: ذو الحجه ١٤١٢ هـ / يونيه ١٩٩٢م

إن أداء أنظمة الإتصالات الرقمية يتأثر تأثراً كبيراً بظاهرة الذبول ، ومن الطرق الفعاله لتصحيح أخطاء الإرسال طريقة التشفير المزدوج و لكن هذه الطريقة تؤدي إلى إنخفاض كبير في معدل إرسال المعلومات .

بالنسبة إلى الإرسال على القنوات الذاويه الغير معتمده على التردد فإن إستخدام التضمين المشفر بدلاً من الشفره الداخليه يرفع من معدل إرسال بالنسبه إلى النظم المستخدمه للتشفير المزدوج ومع ذلك فإنه يقلل من إحتماليه الخطأ في المراسلة .

أما بالنسبه إلى الإرسال على القنوات الذاويه المعتمده على التردد فإن إستخدام الشفره الخارجيه مع التضمين المشفر لايوازي إستخدام المساويات ، ولقد تم تقييم الأداء في هذا النظام بواسطة المحاكاة بالحاسب الآلي .

درجة الماجستير في العلوم

جامعة الملك فهد للبترول والمعادن

الظهران - المملكة العربية السعودية

ذو الحجة ١٤١٢هـ

THESIS ABSTRACT

NAME : **Saud Ahmad Al-Semari**

TITLE : **Performance of TCM with Concatenated Codes Over Fading Channels**

MAJOR : **Electrical Engineering**

Date : **June 1992**

The performance of digital transimssion systems is highly affected by the phenomenon of fading. Concatenated codes are used to enhance the system performance. However, this technique suffers from the excessive bandwidth expansion. One way to mitigate this effect is to use a trellis coded modulation (TCM) technique as an inner code. The use of TCM reduces the bandwidth requirement and yet gives a very good performance.

The performance of outer codes with a TCM encoder/modulator over a slow Rayleigh amplitude distributed channel is evaluated analytically. It is shown that if the Golay code is used as the outer code, coding gain around 30 dB can be achieved.

In the case of frequency selective fading, a digital communication system having an equalizer, a trellis-coded modulator and an outer code is simulated. The effect of frequency selective fading is simulated using the simplified three path model and performance curves are obtained. It is shown that an outer code with a TCM encoder/modulator can not be considered alone as a fading countermeasure and adaptive equalization has to be used in the system.

MASTER OF SCIENCE DEGREE

KING FAHD UNIVERSITY OF PETROLEUM AND MINERALS

Dhahran, Saudi Arabia

June 1992

TABLE OF CONTENTS

Abstract (Arabic)	v
Abstract (English)	vi
List of Tables	ix
List of Figures	x
List of Symbols	xi
1. INTRODUCTION	1
1.1 Overview	1
1.2 Trellis Coded Modulation	3
1.3 Literature Review	5
1.4 Problem Formulation	7
1.5 Thesis Contribution	8
1.6 Thesis Organization	8
2. FADING CHANNELS AND COUNTERMEASURES	10
2.1 Introduction	10
2.2 Modeling of Fading Channels	12
2.3 Calssification of Fading Channels	15
2.4 Frequency-Selective Fading Channel Models	16
2.5 Performance Measures	21
2.6 Fading Countermeasures	23
2.7 Summary	49
3. TRELLIS CODED MODULATION	50
3.1 Introduction	50
3.2 Ungerboeck Codes	53
3.3 Pragmatic Codes	59
3.4 Other TCM Schemes	62
3.5 Summary	63

4. PERFORMANCE OVER SLOW FREQUENCY NON-SELECTIVE FADING CHANNELS 64
4.1 Introduction 64
4.2 Effect of Using Block Codes 66
4.3 Impact of Using Inner TCM Codes 69
4.4 Summary 82
5. PERFORMANCE OVER SLOW FREQUENCY SELECTIVE FADING CHANNELS 84
5.1 Introduction 84
5.2 Baseband Representation 85
5.3 System Description 86
5.4 Simulation Study Objectives 97
5.5 Simulation Results 97
5.6 Summary 99
6. CONCLUSION AND FUTURE WORK 104
6.1 Conclusion 104
5.5 Future Work 105
Appendix A 108
Appendix B 112
Appendix C 114
References 137

LIST OF TABLES

Table
2.1 : Error pattern vectors relation with syndromes 44

LIST OF FIGURES

Figure	page
1.1 : A typical digital communication system	4
2.1 : The Rayleigh pdf ($\sigma = 1$)	14
2.2 : The amplitude response of the Rummler's channel model	19
2.3 : A typical signature curve	24
2.4 : A linear transversal equalizer	28
2.5 : A DFE equalizer	31
2.6 : The transversal equalizer with complex tap gains	34
2.7 : A typical convolutional encoder	46
2.8 : The trellis diagram of the convolutional encoder of figure 2.7	47
3.1 : A general TCM encoder/modulator	52
3.2 : Mapping by set partitioning for 8-PSK	56
3.3 : Ungerboeck four-state 8-PSK encoder/modulator	58
3.4 : Ungerboeck eight-state 8-PSK encoder/modulator	58
3.5 : The pragmatic encoder/modulator for 4, 8, and 16 PSK	61
4.1 : Performance of Golay (23,12) and RM(1,3) over Rayleigh fading with BPSK	68
4.2 : The four-state QPSK encoder	71
4.3 : The monotonic relation of P_b vs. P	73
4.4 : P_b for four-state TCM with QPSK signaling and two different outer codes	75
4.5 : P_b for TCM with QPSK signaling with different constraint lengths and an outer RM(1,3) code	77
4.6 : The 4-stae TCM used with 8-PSK	78
4.7 : P_b for four-state TCM with 8-PSK signaling and two different outer codes	79
4.8 : The 8-state TCM used with 8-PSK	80
4.9 : P_b for 8-state TCM with 8-PSK signaling and two different outer codes	81
4.10 : Effect of increasing the constraint length vs. the use of an outer code	83
5.1 : The system block diagram	88
5.2 : The V.32 call mode modem generating function	90
5.3 : Frequency spectrum of the transmit filter $\rho = .3$	91
5.4 : The 4-state TCM encoder	93
5.5 : Centerband notch with B= 10 dB	100
5.6 : 4 MHz off-center notch with B = 8 dB	101
5.7 : 8 MHz off-center notch with B = 7.5 dB	102
5.8 : Signature curves at BER=10^{-3}	103
6.1 : Comparison of systems with bandwith efficieny of 1 bit/sec/Hz	106

LIST OF SYMBOLS

BPSK	Binary phase shift keying
$\frac{E_b}{N_0}$	Energy per bit/noise power spectral density ratio
$f_X(x)$	Probability density function (pdf)
$I_0(.)$	Bessel function of the first kind of zero order
$Im(.)$	Imaginary part of
$\hat{g(t)}$	complex envelope notation
P_b	Probability of bit error
PSD	Power spectral density
QPSK	Quadrature phase shift keying
$Re(.)$	Real part of

CHAPTER ONE

INTRODUCTION

1.1 Overview

In satellite systems, microwave radio, and telephone systems, digital transmission techniques are used extensively to transmit data. However, the performance of these systems is limited by to many factors. Noise limits the ability to distinguish the transmitted waveform at the receiver. The obvious solution to this problem is to increase the transmitted signal power. Many real communication channels, on the other hand, exhibit other phenomenon which can not be overcome by increasing the signal power. Intersymbol interference, for example, can not be reduced by increasing signal power. Therefore, some other schemes have to be implemented to deal with this phenomena. One such technique is the use of adaptive equalization at the receiver.

Other channels, such as radio channels, exhibit the multipath phenomenon. This causes the transmitted signal to arrive at a distant

receiver by a multiplicity of propagation modes having, in general, different path delays. This multipath fading characteristics, hence, produce destructive and constuctive interference to the signal causing at some instants the loss of the signal completely. This results in what is termed as signal fading. Such channels are called multipath fading channels .

Many countermeasures have been used to mitigate the effects of multipath fading. The design of these countermeasures depends on the behaviour of the channel model. So, many models have been used to statistically characterize the fading channel. One of the most widely used models is the Rayleigh model which assumes that the signal amplitude is distributed according to the Rayleigh distribution. This means that the signal has a random multiplicative coefficient which is distributed according to Rayleigh distribution. Another model which has been used in digital microwave radio applications is the simplified three-path model given by Rummler [50]. This model assumes that two rays are coming to the receiver. The first one is multiplied by a coefficient that has a Gaussian distribution. The other one, called the secondary ray, has a certainy constant delay found from experimental data and is weighted by the product of two random variables having a Gaussain and an exponential distributions.

Adaptive equalization has been used as a technique to treat this problem of fading. However, in the case of deep fading where effective treatment can not be obtained by adaptive equalization alone, error control coding is used. Coding can be either waveform or structured sequence. Waveform coding is used to improve the distance properties of the original waveforms by transforming them into improved ones. Structured sequence codes, however, introduce redundancy in the code

to make use of it at the receiver. All these coding techniques are used to reduce the probability of error for a certain SNR or to reduce the required SNR for a certain error probability. One disadvantage of coding besides the system complexity is the need for more bandwidth at the same data rate, or in other words, a reduction of data rate for the same bandwidth. So, forward error correction has never been popular for bandlimited channels such as telephone or digital microwave channels.

One solution to the problem of bandwidth expansion is to combine coding and modulation together. This technique is known as trellis coded modulation (TCM), or more generally as coded modulation.

1.2 Trellis Coded Modulation

In conventional digital transmission systems, coding and modulation are treated seperately; i. e., the design of coding is independent from the modulation type used. A typical system is shown in figure 1.1. However, in systems using TCM the two processes are integrated and carried out in one stage. This can be done by coding the waveforms instead of coding the baseband bits and implementing soft decision decoding rather than slicing and then process the signal as hard decisions. Using TCM can give coding gains varying from 3 to 6 dB with no bandwidth expansion at all.

In TCM systems, certain patterns of signals are transmitted according to the code used in order to increase the distance proprerties of these signals. In other words, coding is directly applied in the modulation signal space instead of the baseband signal space. Coding can be either block or convolutional. However, since convolutional codes are more efficient than block codes [64], nonbinary convolutional encoders are used. Such coding/modulation schemes are callled signal space codes.

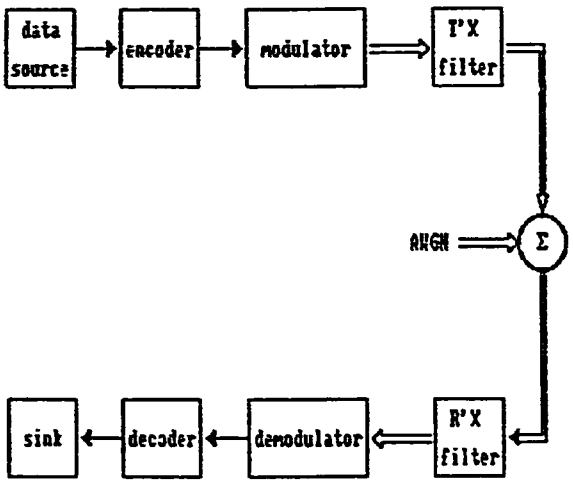

Figure 1.1: A Typical Digital Communication System

If convolutional (trellis) codes are used, the resultant scheme is called Trellis Coded Modulation (TCM).

TCM has been first pioneered by Ungerboeck [61]. He used convolutional codes which have the advantage of simpler decoding algorithms (e.g., Viterbi algorithm) that implement soft decision decoding based on the Euclidean distance in the signal space. This eliminates the intermediate decisions about the transmitted symbols. With this scheme, TCM tries to maximize the Euclidean distance for the code; i.e., signal sequences should have as large distance in the Euclidean space as possible.

As mentioned before, TCM schemes enchance the system performance by at least 3 dB; i.e., a coding gain of 3 dB or more is achieved. The asymptotic coding gain ACG, in dB, compared to some reference system with the same average signal power and noise variance can be expressed as

$$20\log_{10}(d_f/d_{ref})$$

provided that the system is working at a relatively high SNR. Here, d_{ref} denotes the free Euclidean distance of the reference system and d_f is the free distance calculated from the trellis diagram of the TCM system. Ungerboeck [61] has shown that 3 dB gain is achieved using a 4-state 8 PSK encoder, 3.6 dB for an 8-state 8 PSK encoder, and 4.1 dB for a 16-state 8 PSK encoder. More elaborate schemes will give larger coding gains. However, this gain is achieved at the expense of complexity and cost.

1.3 Literature Review

Ungerboeck codes opened the way for finding optimum codes to suit

different channel models. TCM schemes have wide applications in telephone channels because the system performance is improved using the same bandwidth. The CCITT recommendations for the V.32 modems uses a 32 - point signal structure with trellis coding for 9600 bit/s .

One way for the design of trellis codes is encode the I and Q channels together as Ungerboeck did in his original paper [61]. Another approach is to take the I and Q channels and encode each one seperately [64]. Using the latter approach, significant reduction of computational cost is obtained.

Since the development of TCM was heuristic, researchers tried to develop the mathematical tools needed to evaluate the performance of such codes [72]. A new description of TCM hase been reported in the literature [4], and TCM was extended to more than one dimension [44,3,68]

It has been observed that Ungerboeck codes were designed using symmetric signal constellations. Although symmetric signal constellation are optimum with no coding, the same is not necessarily true for coded systems; so, trellis coding with asymmetric modulations were developed. Divsalar and others showed that the use of asymmetric modulations offers a better performance than Ungerboeck codes [19].

Although TCM was originally developed for telephone channels, its performance has been evaluated for different channels. TCM performance has been evaluated for digital micorwave radio applications [5,11,15]. It has been reported that if TCM is used along with adaptive equalizer performance improvement is achieved and is reflected on the outage time. Also, it has been reported that TCM alone can not counteract the effects of residual ISI.

Also, the performance of TCM was tested against other channels.

123

Divsalar and Simon developed analytic bounds for the error probability if TCM is used for fading channels [17]. Also, they reported that the design of TCM over fading channels is not only a function of the Euclidean distance but also of other parameters such as the length of the shortest error event path and the length of the bracnh distances along that path. Therfore, TCM schemes for fading channels were suggested [18]. Other researchers have treated the performance of TCM over fading channels. More details have been reported in [29,20,32,21,65,69,54].

The use of combined coding/modulation was not restricted to convolutional codes. Reed-Solomon (RS) codes are nonbinary perfect codes and can be used instead of convolutional codes. So, the performance of RS-Coded MPSK signaling over Rayleigh fading channels has been evaluated [30].

1.4 Problem Formulation

Since the introduction of coding improves the system performance, concatenated codes are known to enhance the system performance if bandwidth is not a major limitation. Concatenation means that an inner code and an outer code are applied to the system just before modulation. The problem with this technique is that the ratio of the total system data rate to bit rate is the product of the two individual ratios for each code. So , if two 1/2 encoders were used in a concatenated coding scheme the output data rate to bit rate is reduced to 1/4 which reduces the data rate dramatically.

In this theis, we propose to use TCM as an inner code while the outer code could can be any of the known linear conventional codes. The use of TCM as an inner code has the advantage of getting a performance similar to that obtained using a concatenated code. However,

the problem of very low data rate is mitigated. The price to be paid using this method is the system complexity only. The use of TCM with an outer code over a non-fading AWGN channels has been reported in the literature [14] [55]. It has been concluded that using a nonbinary block code (e. g., a Reed-Solomon code) gives the best performance in terms of the probability of error measures. However, The performance of TCM with outer codes has not been evaluated over fading channels.

1.5 Thesis Contribution

In this thesis, the use of TCM with a binary outer code is examined for two different channel models. The first model considered is the Rayleigh distributed frequency non-selective slowly-varying channel model. The performance of a four-state BPSK to QPSK trellis-coded modulator with two outer block is evaluated. The system bandwidth efficiency is .5 bit/sec/Hz. Also, other systems with higher bandwidth efficiencies are analyzed. The performance of A four-state QPSK to 8-PSK trellis-coded modulator with the same outer codes is evaluated. Moreover, The performance enhancement with increasing the number of states of the trellis-coded modulator is evaluated.

The other model that is used is the simplified three-path model given by Rummler [50]. This model represents a slowly-varying frequency-selective channel model. The study of the effects of the Rummler model on the performance is based on computer simulations.

1.6 Thesis Organization

The thesis organization is the following. Chapter two will be devoted to the theory, effects and countermeasures of fading channels.

Chapter three will discuss the basic theory behind TCM. This will include the codes given by Ungerboeck in 1982 [61] and the pregmatic codes as called by Viterbi [64]

Chapter four will discuss the performance enhancement of using some binary outer codes with different TCM codes over slowly-varying Rayleigh distributed fading channels. Two outer codes are used. These are the Reed-Muller (RM) (1,3) and the Golay (23,12) codes. RM(1,3) are known for their simple decoding schemes and good distance properties. The Golay (23,12) code is the only perfect binary code with an error correcting capability of more than one. It has been used in many systems especially when the channel is modeled as a fading channel.

Two different signaling schemes were used. QPSK signaling is used with a 4-state encoder and two different outer codes. The bandwidth efficiency for the previous scheme is .5 bit/sec/Hz and 12/23 bit/sec/Hz when the outer codes are the RM(1,3) and the Golay (23,12) codes, respectively. The other signaling scheme is 8-PSK which doubles the previous efficiencies. The evaluation will be done via upper bounds which give the worst case of the probability of error curves.

Chapter five will contain the results of computer simulations on the use of an outer code and an inner TCM code vs. using a TCM code with equalization. The model used was the simplified three-path model given by Rummler. This model represents a slowly-varying frequency-selective fading channel. The simulation objective is to compare the performance of an equalized system using a TCM scheme with an unequalized system using both a TCM scheme and an outer code. Also, the perfromance improvement with the outer code is evaluated for equalized systems. Main results, conclusions, and future work are discussed in the last chapter.

CHAPTER TWO

FADING CHANNELS AND COUNTERMEASURES

2.1 Introduction

In satellite communication and digital microwave systems, line-of-sight (LOS) propagation (from the VHF band to the SHF band) is the most appropriate choice of transmission. A LOS link behaves as a wide-band, low-noise channel. However, it suffers from anomalous propagation conditions. This is due to the dynamic behaviour of the state of the atmosphere which carries the radio wave.

The performance of the LOS systems is also affected by several other factors: free space loss, terrain, and precipitation, etc. In LOS propagation, there are three major paths: a direct path, a ground or surface wave, and a sky wave reflected from the ionosphere, troposphere, or ground.

These cases of reflections, refractions, and diffractions (terrain or atmospheric) produce *destructive and constrcutive* interference to the signal which causes the transmitted signal to arrive at the receiver by a multiplicity of propagation modes having, in general, different path delays. In other words, the energy of the signal leaks through several paths. This problem of multipath fading leads to time dispersion of the transmitted signal, thus leading to the distortion caused by intersymbol interference (ISI) which together with the noise affect the decision upon the transmitted information.

The study of the propagation effects which cause fading started in the early 1950's. Fading channels are usually characterized as linear time-varying filters. The channel could be varying slowly, so that a short-term spectrum of the received signal can be found by multiplying the Fourier transforms of the input with that of the channel. Slowly-varying fading channels have an advantage in their analysis since the analysis can be done over a time interval in which there is only very small variation in the transfer function of the channel with respect to time. The assumption that the spectrum is fixed over the interval is justified in this case and will lead to a negligible difference from the real model.

Multipath fading was observed to cause severe problems in reception, especially in mornings and evenings during summer months. In microwave digital radio, efficient utilization of transmission bandwidths requires the use of multilevel signaling. This suggests the use of M-ary QAM techniques. Since digital radio uses these types of spectrally efficient modulation techniques, the selective loss of some of the received signal frequency components can affect its decision process.

2.2 Modeling of Fading Channels

It is usually observed that fading channels produce random amplitude and phase variations on the received signal. This can be described mathematically if, for example, an unmodulated carrier at frequency f_c is transmitted over the channel; so, the transmitted signal can be expressed as

$$s(t) = Re[u(t)e^{j2\pi f_c t}] = Re[e^{j2\pi f_c t}] \tag{2.1}$$

where $u(t)$ is the complex envelope of the transmitted signal $s(t)$ and Re[.] is the real part of the quantity enclosed between brackets. Since the noise-free channel effect on the signal can be described as

$$x(t) = \sum_{i=1}^{n} a_i(t)s(t - \tau_i(t)) \tag{2.2}$$

then, the received complex envelope of the signal, $x(t)$, is

$$r(t) = \sum_{i=1}^{n} a_i(t)e^{-j2\pi f_c \tau_i(t)} \tag{2.3}$$

which, can be written as

$$r(t) = \sum_{i=1}^{n} a_i(t)e^{-j\theta_i(t)} \tag{2.4}$$

This represents a sum of a number of time-variant vectors (phasors) having amplitudes $a_i(t)$ and phases $\theta_i(t)$. These two random numbers are

expected to change. When there are a large number of paths, the Central Limit Theorem can be applied and it can be said that $r(t)$ is modeled as a complex-valued Gaussian random process in the t variable.[45] When the impulse response is modeled as a zero-mean complex Gaussian process, the envelope of the received signal will be Rayleigh-ditributed and with the following pdf:

$$f_A(a) = \frac{a}{\sigma^2} e^{(-\frac{a^2}{2\sigma^2})} \qquad a \geq 0 \tag{2.5}$$

where $2\sigma^2$ represents the mean square value. Also, the pdf of the phase will be uniformly distributed as

$$f_\Theta(\theta) = \frac{1}{2\pi} \qquad 0 \leq \theta \leq 2\pi \tag{2.6}$$

In this case, the channel is said to be a Rayleigh fading channel. Rayleigh-distributed envelope fading has been observed often on HF and troposcatter channels and this model is widely accepted. [45] The normalized Rayleigh pdf ($\sigma = 1$) is shown in figure 2.1.

On the other hand, if there are fixed reflectors in the transmission medium in addition to the randomly moving scatterers, the received signal can no longer be assumed to have the Rayleigh distribution; i.e., the signal does not have a zero-mean but a specular component exists. In this case, the envelope has a Rice distribution and the channel is said to be a Rician fading channel. The envelope will have the following pdf [58]:

$$f_A(a) = \frac{a}{S_f} \exp(-\frac{S_0}{S_f}) \exp(-\frac{a^2}{2S_f}) I_0(\frac{a\sqrt{2S_0}}{S_f}) \qquad 0 \leq a \leq \infty \tag{2.7}$$

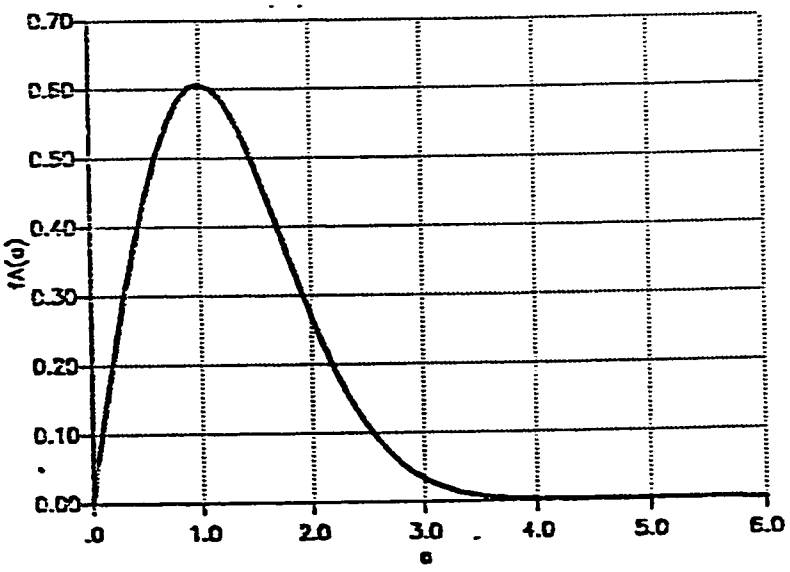

Figure 2.1: The Rayleigh pdf ($\sigma = 1$)

where S_0 is the mean power in nonfading component, S_f is the mean power in fading component and $I_0(.)$ is the modified Bessel function of the first kind of zero order. The phase is no longer uniformly distributed and is concentrated around that of the nonfading component.

2.3 Classification of Fading Channels

Atmospheric effects are usually caused by solar or meteorological influences. These influences happen with different time scales; e.g., seconds, minutes, tens of minutes, hours, seasons, years, or even 11-year sunspot cycles. This gives rise to two kinds of channel variabilities, namely : short-term and long-term fading. Short-term characterization assumes that the long-term variability is sufficiently slow that the channel statistics can be regarded to be reasonably fixed over a certain time interval. Only short-term fading variations affect the received signal details, while long-term fading variations affect only the availability of the channel. [58]

Fading can be classified as either power or multipath fading. Power fading is equivalent to the insertion of attenuation at the receiver input. It results, also, in slow variations of the signal. Such variations are independent of frequency.

On the other hand, multipath fading results in destructive and constructive interference between the direct path and one of the reflected or refracted rays. A matter of concern occurs when the primary and secondary rays are equal in amplitude but opposite in phase, thus resulting in a complete loss of the signal. Such instances are called deep fades.

There are mainly two types of multipath fading. Flat fading or frequency non-selective fading happens when all spectral components of the signal are equally affected. For example, heavy rain can cause such type of fading for signaling above the 10 GHz band. A useful term in

the characterization of flat fading is the flat fade margin. It is defined as the difference between the nominal receiver power and the threshold value. This threshold value corresponds to a given bit error rate (BER) threshold, usually 10^{-3}. For a typical system, the flat fade margin is designed to be about 40 dB. The other type is referred to as frequency-selective fading where the attenuation values vary with frequency across the channel band.

Therefore, fading channels can be classified into 4 different classes:

1. Frequency-nonselective slowly-varying channels (Flat-fading channels)
2. Frequency-selective slowly-varying channels
3. Frequency-nonselective fast fading channels
4. Frequency-selective fast fading channels

2.4 Frequency-Selective Fading Channel Models

Any model of the fading phenomenon should take into consideration the effects of the atmospheric conditions. In general, researchers deal with two types of models: atmospheric models and channel models. Atmospheric models describe the physical propagation on the radio path, while channel models try to mathematically fit the propagation response over a finite channel bandwidth. For specific frequency bands, experimental data have been collected to find suitable frequency response models with statistical parameters [50].

A general multipath transfer function of a fading channel model is described by the following transfer function [57]:

$$H(w) = 1 + \sum_{i=1}^{n} \beta_i e^{jw\tau_i} \tag{2.8}$$

where β_i and τ_i are statistical parameters that describe the ith channel path attenuation and phase. A special case of the previous model is when $n = 1$ so that the system function reduces to a two path model. Two-ray model is easy to understand and apply. However, during fading conditions, most multipath fading propagation research expects the presence of three (or more) rays.

In 1979, Rummler [50] attempted to describe the overall structure of the frequency response of multipath fading channel on microwave digital radio. He proposed a statistical delay network to characterize the fading in the channel by a simple three path model. The transfer function has the following form:

$$H(w) = H(2\pi f) = a(1 - be^{-j2\pi(f - f_0)\tau}) \tag{2.9}$$

where a, b, f_0, and τ are statistical parameters determined from measured data. This model appears to be a two-path response. However, the previous model can not be synthesized with two real paths (except only for $w_0\tau = (2n + 1)\pi$). Since it can be synthesized with three paths under the constraint that two of the paths have very nearly the same delay, it has been described as a simple three path model of a fade. This response can be visualized as arising from three paths. The direct path is unfaded; the second path is similar in strength and close enough in delay to the first that their algebraic composite response over the channel bandwidth is constant (the parameter a). The third path is at a relative delay τ from

the direct ray. It provides the frequency shaping of $H(jw)$. The previous model has been found to provide a good fit to almost all measured responses of narrow band radio channels. The amplitude of the transfer fuction of the channel is shown in figure 2.2.

Within measurement errors, one can not uniquely determine all the four parameters (a, b, f_0, and τ) from a given channel response measurement. It appeared that a unique set of the four parameters can not be found for more than half the faded channel conditions encountered. Therfore, one of the parameters have to be fixed. Fixing a will give a two-ray model which is not sufficient to fully describe the fading phenomenon. Fixing b will also give a two-ray model but with a scaled amplitude. The delay τ is the only parameter which, when fixed, will produce a reasonable model. This delay parameter can be fixed at a convenient value that insures that the period of $H(jw)$ in frquency is large compared to the measurement bandwidth. The joint statistics of (a, b, and f_0) depends on the choice of τ. With fixed τ, the response minimum is shifted with respect to frequency by varying f_0. Varying a changes the overall level and b changes the shapliness. With $\tau = 6.31$ ns, the model is sufficient to characterize a 30-MHz channel in the 6-GHz common carrier band, and the model gives a very good approximation to the channel for all observed conditions. [50]

As mentioned earlier, the simple three-path model is defined by requiring the delay between the first two paths to be sufficiently small; i.e., $(w_2 - w_1)\tau_1 \ll 1$ where w_1 and w_2 are the start and end frequency of the band of interest, respectively, and τ_1 is the delay of the second path. This assumption will result in the previously mentioned trasnfer function, where a is a flat loss term, $(1 - be^{-j2\pi(f-f_0)\tau})$ represents the interference between two rays with relative delay τ. The notch frequency is w_0 and

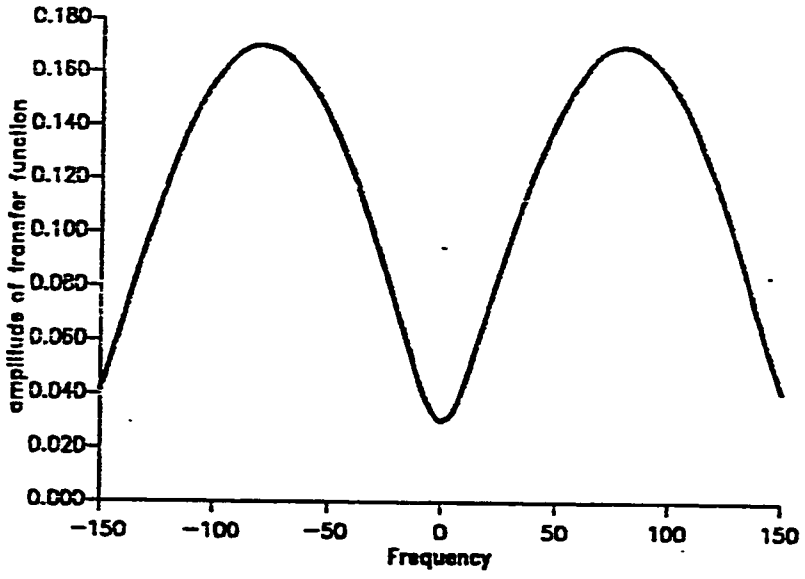

Figure 2.2: The amplitude response of the Rummler's channel vs. frequency(Mhz) ($b = .7$, $a = .1$, $f_0 = 0$ MHz)

the minimum of $H(jw)$ occurs at $w = w_0$.

Two useful quantities are usually mentioned when dealing with frequency selective fading. The first quantity A, is referred to as the fade level or the loss term, and mathematically it is defined as $A = -20 \log a$. The second quantity is called the relative notch depth and is given as $B = -20 \log (1 - b)$. The quantity $A + B$ gives the total fade depth. If the quantity b ranges from 0 to 1 and the delay τ is positive, the zeros of the transfer function are in the left-half plane and the function is described to be a minimum phase function.

The distribution of the notch frequency is independent of the other paramters and is uniform over the frequencies of interest. The probability density function of f_0 is described as

$$f_{f_0}(f_0) = \begin{cases} \frac{5\tau}{3} & |f_0| \leq \frac{1}{4\tau} \\ \frac{\tau}{3} & \frac{1}{4\tau} < |f_0| < \frac{1}{2\tau} \end{cases} \tag{2.10}$$

The two quantities A and B are partially correlated. The distribution of A conditioned on B is Gaussian (i. e., a is log-normal). The distribution of B is a one-sided exponential. The distribution of b has the form

$$\Pr(1 - b < X) = X^{2.3} \tag{2.11}$$

So, the distribution of B can be written as

$$\Pr(B > X) = e^{-X/2.3} \tag{2.12}$$

The distribution of A is conditioned on B and is given as

$$\Pr(A > Y) = 1 - P[\frac{Y - A_0(B)}{5}] \tag{2.13}$$

where P is the cumulative distribution function of a zero mean, unit variance Gaussian random variable. The quantity A_0 is the mean of A for a given value of B and is given by the following relation

$$A_0(B) = 24.6(B^4 + 500)/(B^4 + 800) \tag{2.14}$$

Possible ranges for B are from 3 dB to 25 dB. For $b > 0.5$ ($B > 20$ dB), the mean value of A is 25 dB with a standard deviation of 5 dB.[50]

The fixed delay ($6.31ns$) model gives a very good approximation to the channel for all observed conditions. It is indistinguishible from a perfect model of a line-of-sight microwave radio channel. This model is the most widely accepted and has been widely used in theoretical studies & simulations. [5][57][38]

2.5 Performance Measures

In digital communication systems, BER vs. SNR or E_b/N_0 are usually used to give an indication about how good the system performance is. In digital microwave radio performance prediction, link outage time is estimated. An outage time event is said to occur in a digital radio receiver if its BER exceeds a specified value (10^{-3} or 10^{-4}) for not more than ten consecutive seconds [26]. If the event lasts for more than 10 consecutive seconds, the system is said to be *unavailable*. The net outage time is the sum of all outage time events during a certain time period.

To calculate the outage time for a certain threshold, one must sweep all the values of the notch frequency f_0 and find the critical values of A and B that cause this outage. Then, the probability of outage can be expressed as

$$P_0 = \int_{-\pi}^{\pi} f_\phi(\phi) F_c(\phi) d\phi \tag{2.15}$$

where $F_c(\phi)$ is obtained by integrating the product of f_A and f_B over the region for which critical values are exceeded.

A very useful tool in estimating the link outage time of a certain system is the system signature curve. Such curves are used to characterize the sensitivity of the system to frquency selective fading. For the case of the simplified three path model, Lundgren and Rummler found that the outage time was dominated by frequency selective fading rather than by the total signal fading relative to noise [38]. Therefore the fade level A can be removed from consideration and a single plot of critical B,or b, vs. f_0 can be obtained. Therefore, a systematic procedure for obtaining the system signature can be summarized as follows :

- The value of the notch frequency f_0 is set to zero.
- The value of b is varied until the BER equals the threshold value. This value of b is denoted as the critical b or b_c.
- The previous step is repeated for different values of f_0 until the whole bandwidth is covered.
- The system signature for a BER=10^{-3} can now be plotted where the abscissa is the notch frequency and the ordinate is the notch depth critical value b_c.

Signature curves are symmetric with respect to the zero notch frequency; i. e., they are even functions of frequency. A typical signature curve is shown in figure 2.3. As stated in the above procedure, the width of the system signature curve is usually not larger than the channel bandwidth. Conditional outage probability is found by integrating the joint pdf of B and f_0 over the outage region defined by this curve. It can be inferred that off-centered notches can be worse than centered ones because they introduce more cross-rail interference.

2.6 Fading Countermeasures

Having described the phenomena of fading, what are the countermeasures used to enhance the system performance? Basically, there are four countermeasures used against fading effects. They may be used seperately or combined together. These techniques are

- Increasing the system fading margin
- Diversity techniques
- Adaptive equalization
- Error control codes

The choice of one or more of the countermeasures depends on the channel carrying the information. In the case of deep fades, no matter how much power is dumped into the signal, no real improvement can be achieved. So, another technique/s different from pumping more power has/have to be used.

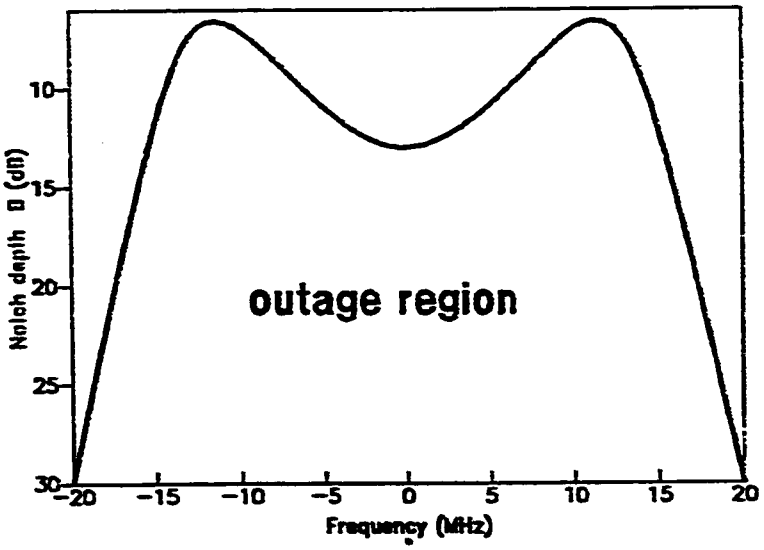

Figure 2.3: A typical signature curve

2.6.1 Diversity

This technique suggests the transmission of the information over two or more independent fading channels. This will enhance the system performance because the probability of having the signal unavailable from all channels is smaller than in the case of no diversity. Therefore the probability of symbol error will decrease. Building an independent fading channel can be done via space, frequency, angle, time, or by using cross-polarization transmission.

Space diversity has been first used in 1927 for HF skywave reception. This method employs the use of two antennas vertically spaced by a distance that is a function of the wavelength(typical spacing is about 10 meters). The important point in their spacing is to make sure that the two received signals have uncorrelated fading depth. This means that the ocuurrence of deep fades is independent in the different paths. The two signals can be combined at IF, RF, or baseband frequencies. Space diversity when used alone can reduce the outage time by about a factor of 10 over that of systems employing no diversity. [57]

The use of space diversity offers no increase in bandwidth. Also, only one transmitter is needed for transmission. However, two or more antennas are needed at the receiver end.

Frequency diversity provides two signal frequencies by the use of seperate transmitter-receiver pairs. On the other hand, angle diversity uses two antennas mounted side-by-side with different angles of elevations. Time diversity was used only for troposcatter paths. In time diversity the information signal is repeated after a time greater than the coherence time of the channel. This type of diversity increases the bandwidth because it lowers the effective rate of transmission. Finally, cross-polarization diversity transmits the information via orthogonal polarization. It is not

suitable as a fading countermeasure and is used for doubling the capacity of the link.

All mentioned techniques give protection against equipment failure. Also, they reduce the effect of multipath fading. It has been observed that when diversity is used in conjunction with equalization an improvement that is larger than the product of their individual improvements is achieved [57].

2.6.2 Channel Equalization

As mentioned earlier, signals transmitted through frequency-selective fading channels experience time-spreading. In radio communication channels, multipatth phenommena leads to excessive intersymbol interference (ISI). One of the mitigation techniques used in the transmission over telephone channels to enhance the system performance against ISI is the use of adaptive equalization. So, this suggests the use of equalization techniques in digital microwave radio systems to reduce the effect of ISI. The aim of equalization is to reverse the distortion caused by the channel. Also, this process has to be adaptive since the fading phenomena is itself time-varying. In fact, equalizers are becoming almost an essential unit in digital communication systems. Adaptive equalizers are being developed for the use of digital signaling in the Mbaud range at microwave frequencies [58].

In digital microwave systems, multilevel modulation techniques are being used. In such cases of modulation two sources of distortion appear: in-phase and quadrature distortion. It can be seen that there are two sources of performance degradations in digital transmission systems, namely channel attenuation and intersymbol interference. There are basically two types of equalization techniques:

- Frequency-domain equalizers

- Time-domain equalizers

Frequency-domain equalizers introduce amplitude correction to restore equality in the spectral density of the signal. This can be done by estimating two points in the power spectrum . This type is referred to as slope equalizers. Another type of frequency-domain equalizers is the notch equalizer. this equalizer produces a transfer function which has the inverse of the channel. The performance of these equalizers is acceptable in the case of modulation schemes with few different levels. However, in the case of modulation schemes which are very bandwidth efficient they result in an improvement which is not enough for reliable transmission.

Because ISI is a time domain effect, the design of efficient equalization techniques has to be done in the time domain. Time domain equalizers are very efficient digital filters used to reduce the effects of ISI. They basically consist of delay elements with tap gains(attenuators). The different types of connections result in different equalizer configurations(e.g., transversal, fractionally spaced, or decision feedback equalizers).

The simplest type of time-domain equalizers, or equalizers for short, is the transversal equalizer. It consists of a number of delay elements or shift registers connected in cascade, and each one has an associated gain. The tap spacing or the delay value is equal to the symbol period T. The values of the sum of the contents of each register multiplied by its gain yields the output of the system. During each symbol period, a new symbol is shifted into the equalizer and the output is evaluated. A general form of a linear transversal equalizer is shown in figure 2.4. The settings of the tap gains are updated according to a specific criteria. For example, the gains may be adjusted to minimize the mean square error (MMSE) between the output of the equalizer and the transmitted symbol. Since the transmitted symbols are not known at the receiver, a training sequence, known to both

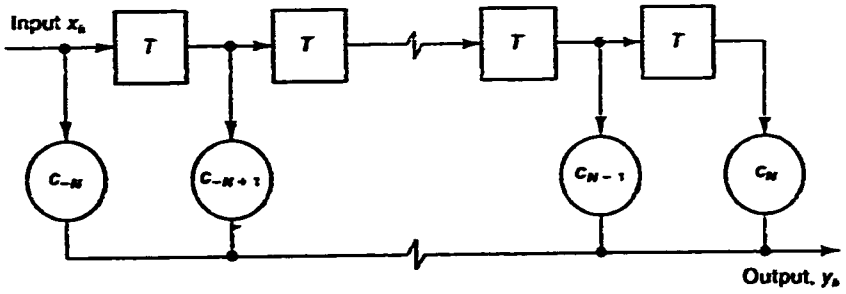

Figure 2.4: A linear transversal equalizer

ends, is transmitted first to set the gains at their appropriate levels prior to data transmission. This type of equalizers are said to be automatic equalizers. If the gains are also updated during data mode, the equalizer is referred to as an adaptive equalizer.

For linear transversal equalizers the delay element value is T. One of the conditions that must be met when dealing with transversal equalizers is the need for accurate timing at the sampling process. Any change in the sampler phase will accordingly cause a change in the amplitude and/or delay of the signal spectra thus causing the problem of aliasing or spectral overlap. Thus, inaccurate timing instant may affect the performance of the equalizer very strongly.

However, if the delay element is made smaller than T, the resulting equalizer will be insensitive to changes in the sampling phase. This type of equalizer is called fractionally spaced equalizers (FSE) [45]. A very popular choice is to make the tap spacing equal to $\frac{T}{2}$. In this way the received signal is sampled every $\frac{T}{2}$ seconds and one output is produced at each symbol interval T. The coefficients may be updated once every symbol interval. Comparing the two types, one finds that $\frac{T}{2}$ equalizers are better than T-spaced equalizers in different aspects. First, a $\frac{T}{2}$ equalizer with the same time span performs better than a T equalizer. Second, no pre-equalizer receive shaping filter is required with the $\frac{T}{2}$ equalizer. Also, $\frac{T}{2}$ equalizers perform much better than T equalizers over channels with severe delay distortion at their band-edge[46].

Two limitations are imposed on the performance of the previous type of equalizers. First, many taps are needed for optimal filtering in the case of severe fading. Ideally, an infinite number of taps is needed to remove ISI completely. In multipath fading with multipath spread only over few symbols, relatively short equalizers can be used. For digital

radio applications, a 5 to 7 tap equalizer is a typical choice. The center tap is chosen as a reference to give equal effectiveness against ISI from both previous and next symbols. Second. The process of equalization may result in noise enhancement (FSE's give less enhancement than transversal equalizers).

The limitations described previously suggest the use of a recursive filter; i.e., a filter with a feedback connection as shown in figure 2.5. This is called a decision feedback equalizer (DFE). First, the received signal is processed by a feedforward equalizerand then the decision made on the equalized signal is fed back through another transversal filter. This means that the ISI from past symbol is cancelled exactly. It has been reported that DFE equalizers reduce the ISI without as much noise enhancement as linear equalizers do [46].

The MMSE Criterion

Least mean squares (LMS) criterion [45] for tap gains update of equalizers is very commonly used in high speed modems. This critetia is explained shortly. Let $d(i)$, $y(k)$ and $z(i)$ denote the transmitted, received and equalized real-valued symbols, respectively. Then,

$$z(i) = \sum_{k=0}^{N-1} c(k)y(i-k) \tag{2.16}$$

and the error signal is defined as

$$e(i) = d(i) - \sum_{k=0}^{N-1} c(k)y(i-k) \tag{2.17}$$

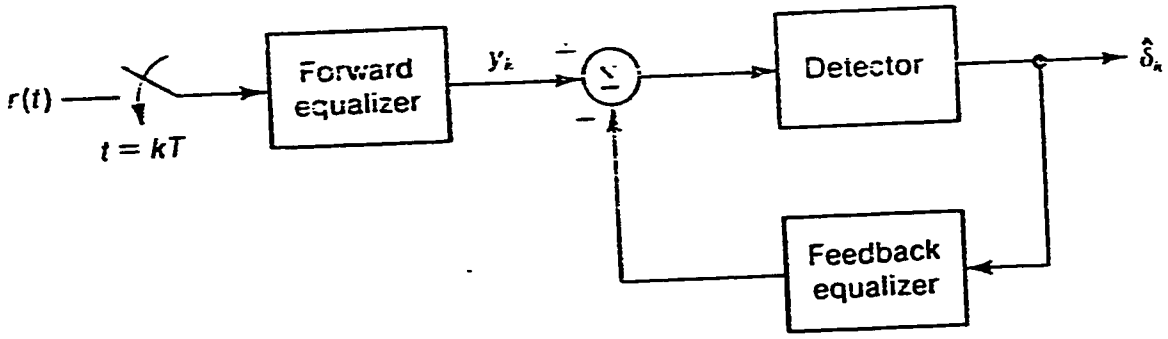

Figure 2.5: A DFE equalizer

The expected value of this error signal is

$$\varepsilon = E[(d(i) - \sum_{k=0}^{N-1} c(k)y(i-k))^2] \tag{2.18}$$

where $\{c(k)\}$ is a set of the equalizer coefficients. The MMSE criteria is based on minimizing the quantity ε. This can be done using the gradient method (appendix A).

Therefore, the update of the tap gains will be according to

$$\underline{C}(i+1) = \underline{C}(i) + \alpha E[e(i)\underline{Y}] \tag{2.19}$$

The problem here is how to find $E[e(i)\underline{Y}]$. However, an unbiased estimator is used to estimate the previous quantity. This estimator is the value of the product $e(i)\underline{Y}$. The use of such an estimator leads to what is called the least mean squares (LMS) criteria which defines the tap gains update as follow

$$\underline{C}(i+1) = \underline{C}(i) + \alpha e(i)\underline{Y} \tag{2.20}$$

In other words, each coefficient is updated according to

$$c_k(i+1) = c_k(i) + \alpha e(i)y(i-k) \tag{2.21}$$

On the other hand, $d(i)$, $y(i)$ and $z(i)$ will be complex-valued sequences in MPSK or QAM systems and they represent the complex envelope of

each signal. The error signal is defined to be the square of the difference between the transmitted in-phase component and the equalized in-phase component plus the square of the difference between the transmitted quadrature component and the equalized quadrature component. A typical transversal equalizer with complex-valued tap gains is given in figure 2.6. Similarly, the LMS criterion will be stated as follows

$$c_k(i+1) = c_k(i) + \alpha e(i) y^*(i-k) \tag{2.22}$$

where y^* is the complex conjugate of y and c_k will be complex valued. The resulting equalizer will consist of a set of four real transversal filters, cross-coupled, with two inputs representing the complex envelope of the received signal and two outputs representing the complex envelope of the equalized signal. The real coefficients of c_k will reduce the effects of ISI in the in-phase and quadrature channels. The imaginary coefficients will combat the cross interference between the two channels. The equalized signal can be represented in one single equation with complex sequences as follows

$$z(i) = \sum_{k=0}^{N-1} c(k) y(i-k) \tag{2.23}$$

So, for each component

$$z_I(i) = \sum_{k=0}^{N-1} c_{re}(k) y_{re}(i-k) - \sum_{k=0}^{N-1} c_{im}(k) y_{im}(i-k) = Y_{re}^T C_{re} - Y_{im} C_{im} \tag{2.24}$$

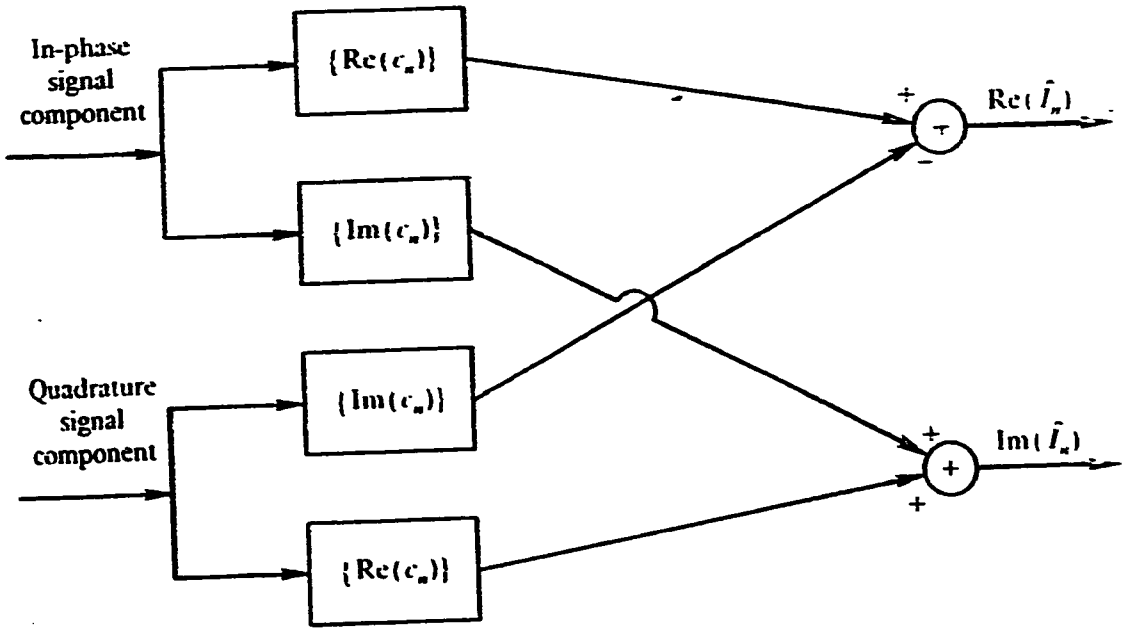

Figure 2.6: The transversal equalizer with complex tap gains

and

$$z_Q(i) = \sum_{k=0}^{N-1} c_{re}(k) y_{im}(i-k) + \sum_{k=0}^{N-1} c_{im}(k) y_{re}(i-k) = Y_{im}^T C_{re} + Y_{re} c_{im} \quad (2.25)$$

What remains about the LMS algorithm is the convergence behaviour. Convergence properties of the LMS equalizer has been studied extensively and it has been reported [45] that the condition for convergence is that

$$0 \leq \alpha \leq \frac{2}{\lambda_{max}} \quad (2.26)$$

where λ_{max} is the maximum of the set of the eigenvalues of the R_y matrix.

2.6.3 Error Control Coding

As stated earlier, the objective of reliable transmission is to deliver information from a source to a destination with a minimum number of errors. Coding can be defined as a branch of information theory which was originated by Shannon in the late 1940's. This theory says that reliable transmission can be made at a rate not exceeding the channel capacity and this condition of nearly error free transmission can be achieved via some coding scheme. The theory does not indicate which coding scheme to be used; so, most later research on information theory was based on finding efficient codes to enhance the system performance. The goal is to find codes which are capable of correcting as many errors as possible with minimum redundancy.

The basic idea behind error control codes is to introduce some kind of redundancy to reduce the errors in the information signal. The main advantage is to have a better performance using the same power as in the

uncoded system, or to get the same performance of uncoded systems but with less required power. However, the price to be paid is to reduce the data rate or increase the signal power.

So, coding is not suitable for channels with bandwidth constraint but finds most of its applications in power limited systems to save power at the expense of bandwidth. In the case of deep space and satellite communications, power limited systems, coding is used to enhance the system performance. In fact, Reed-Muller(1,5) and Golay (24,12,8) codes were used to transmit photographs from the outer space. Also, a Reed-Solomon code was used for the transmission of data from the Voyager 2 spacevraft in 1986. [63]

There are two major classes of channel coding. The first one is waveform coding wherein the signal waveform is encoded in a certain scheme. This class includes M-ary signaling, antipodal, orthogonal, bi-orthogonal, transorthogonal, and the new technique trellis-coded modulation (TCM). The other class is structured-sequence channel coding. This type of coding performs the encoding just before modulation; i.e., the coding is done in the baseband or on the bit stream. The major subclass is the algebraic coding which has two bracnhes: block codes and convolutional codes. The codes of iterest here are block codes and convolutional codes. So, they will be treated at the next sections of this chapter. The next chapter will be devoted on the recent method of channel coding, namely TCM.

Block Codes

It is well known that the probability of error in any digital signaling scheme over AWGN channels is a function of the distance between the message points in the signal space diagram. The objective of any coding scheme is

to enlarge the distance between these points. In block coding this objective is done by associating a number of possible received signals to only one transmitted signal so that if any of such signals is received, it will be decoded as the associated signal. Therefore, the channel encoder takes every k bits and produces a unique n bit frame where $n > k$. Such a code is called an (n,k) block code. This means that $n - k$ bits are added as a redundancy. These bits are called check bits. Then, the modulator transforms the coded bits, all the n bit frame sequence, into a sequence of waveforms. At the receiver the reverse process is performed and the check bits are used by the decoder to detect, and possibly correct, errors introduced during transmission. So, the effective data rate is k/n multiplied by the rate of transmitting one bit. The quantity k/n is called the code rate. Another quantity called the Hamming distance is defined as the number of corresponding positions in which two frames differ. The basic parameters of a linear code are the code length(frame) n, the number of data bits in one frame k, the minimum distance of the code d. The minimum distance of a code is defined as the minimum Hamming distance between any two frames.

A major class of block codes is linear binary codes. Binary means the algebra of the code has only two digits : 0 and 1. A binary code is linear if and only if the sum of any two codewords is a codeword. Any code can be described mathematically as follows. An (n,k,d) code consist of a set of 2^k binary vectors (codewords) of length n. Any two codewords differ in at least d places. The error correcting capability of any code depends on d. A code of minimum Hamming distance d is capable of correcting up to $\lfloor \frac{d-1}{2} \rfloor$ distributed anywhere in one codeword [56].

If a binary-symmetric channel(BSC) model of the channel with error probability of ρ is assumed, the demodulation process is seperated from

the decoding stage and the sequence is assumed to consist of independent information bits. This choice of a BSC model is not optimum. However, the combination of the demodulator with the decoder leads to very complicated decoding schemes if block codes are used. The performance of a code can be described via the weight distribution of the codewords. The weight of a codeword is defined as the number of nonzero components. For example, the codeword 00111 with $n = 5$ has a weight of 3. By calculating the weight of all codewords, a code weight vector W can be formed where W is a $1 \times n$ vector. The ith column consist of the sum of all codewords with a weight of i. The sum of all elements of the vector plus one will give the total number of codewords. If the all-zero codeword is transmitted the received codeword may be the all-zero or another frame with a weight of $w \geq 0$ from the all-zero codeword. If the code is linear, this is equivalent to transmitting a codeword different from the all-zero codeword and receiving a frame with a distance of $w \geq 0$. So, in calculating the performance for a linear block code, only the information about the weight distribution of the code is sufficient. This explains the importance of getting the weight vector of a code.[45]

Let the weight vector be denoted by $W = (w_1, ..., w_n)$, and the transmission of information is done over a BSC with a transition probability of ρ. The probability of receiving a frame with a Hamming distance i different from the transmitted codeword is

$$\rho^i(1-\rho)^{n-i} \tag{2.27}$$

If the code is used to correct errors only and it has a distance $d = 2t + 1$, any received vector whose distance is at most t from a certain codeword is decoded as that codeword. Making an error at the decoding process

happens when the received frame is at a distance $> t$ from the transmitted symbol. So, the probability of making an error at the decoder is bounded by

$$P_e \leq \sum_{i=t+1}^{n} \binom{n}{i} \rho^i (1-\rho)^{n-i} \tag{2.28}$$

The previous bound becomes equality if the decoder exactly corrects all combinations of error patterns up to and including t errors, and no combinations of errors greater than t. The bit probability of error is approximated by [56]

$$P_b \approx \frac{1}{n} \sum_{i=t+1}^{n} i \binom{n}{i} \rho^i (1-\rho)^{n-i} \tag{2.29}$$

Having described the performance of block codes, the encoding and decoding processes can be described mathematically as follows. Let the block of bits to be encoded (message) bits be denoted by the $1 \times k$ vector $\underline{r}_d$ and the $1 \times m$ vector $\underline{r}_c$ corresponds to the check (parity) bits associated with the message bits. So, the coded vector is

$$\underline{r}_{1 \times N} = \left[\underline{r}_d \;\; \underline{r}_c \right] \tag{2.30}$$

where $N = k+m$. The code designed in this way is called a systematic code since the message vector and the parity vector are concatenated together to form one vector. The check bits are formed such that they satisfy the parity check equations which can be described by the matrix $P_{k \times m}$ and

$\underline{r}_c = \underline{r}_d P$. The parity check matrix is defined so that the product of the encoded vector with the transpose of parity check matrix results in an all zero vector; i. e.,

$$\underline{r}_{1\times N} H^T_{N\times m} = \underline{0}_{1\times m} \tag{2.31}$$

It is useful at the decoding stage as will be shown. So, the structure of the parity check matrix will be

$$H_{m\times N} = \left[\begin{array}{cc} P^T & I_m \end{array} \right] \tag{2.32}$$

Another useful matrix used in the representation of block codes is the generator matrix G. It is defined such that $\underline{r}_{1\times N} = \underline{r}_d G$. So, G can be written as

$$G = \left[\begin{array}{cc} I_k & P \end{array} \right] \tag{2.33}$$

The decoding process can be done using the parity check matrix described earlier. Let the vector $\underline{y}$ correspond to the received information sequence after demodulation. This vector is corrupted by noise so that $\underline{y}$ can be equated to the sum of the transmitted vector and a noise vector $\underline{e}$; i. e.,

$$\underline{y} = \underline{r} + \underline{e} \tag{2.34}$$

Since the product of any codeword with the transpose of the parity check matrix will result in an all zero vector, the product of the received vector with H^T will yield zero if there is no error in the received vector $\underline{y}$. Otherwise, the product will give a non-zero vector depending on the error pattern vector. Expressed mathematically, the product will be

$$\underline{y}h^T = (\underline{r} + \underline{e})H^T = \underline{r}H^t + \underline{e}H^T = \underline{e}H^T = \underline{S}_{1\times m} \qquad (2.35)$$

This output $1 \times m$ vector is called the syndrome. There is a one-to-one correspondence between the error pattern vector and the syndrome vector. So, at the design stage the correspondence beteen the two vectors can be set and the decoder has to have the parity check matrix with the syndrome-error pattern relation stored in memory to apply the decoding operation. The syndrome vector has 2^m possible values. So, the design difficulty and the memory requirement increases exponentially with m. This technique of decoding is known as **syndrome decoding** or standard array decoding. However, for codes with larger values of m another decoding techniques depicted from the structure of the code are used.

One of the useful block coding classes used in practice is the Reed-Muller (RM) codes [63]. It is a subset of linear block codes. It was invented by Muller in 1953 and a simple decoding scheme based on majority logic decoding was given by Reed in 1954. One of the advantages of RM codes is that they have a simple decoding method and yet they have very good d_{min} properties. RM codes are defined using only two parameters, namely the order and the length of the code. An RM(r,m) code is said to have an order of r and a length of 2^m. The minimum distance of the code is 2^{m-r}. Also, the dimension (k) of the code is expressed in terms of r and m as

$$k = 1 + \sum_{i=1}^{r} \binom{m}{i} \tag{2.36}$$

For example, an RM(1,3) code will have a length of 2^3 and the number of data bits in one codeword is 4. The minimum distance d_{min} is 4. So, the code is equivalent to an (8,4,4) block code. So, RM(1,3) code is equivalent to the extended (8,4,4) Hamming code. RM codes are described by a boolean function. Also, they can be described by the matrix notation described above because it is a subclass of linear block codes. Since the RM(1,3) code is equivalent to the extended (8,4,4) Hamming code which can be obtained by adding an even parity bit to the (7,4,3) Hamming code, the parity check equations are defined as

$$\begin{aligned} r_5 &= r_1 + r_2 + r_4 \\ r_6 &= r_2 + r_3 + r_4 \\ r_7 &= r_1 + r_2 + r_3 \\ r_8 &= r_1 + r_3 + r_4 \end{aligned} \tag{2.37}$$

which means that the parity check matrix will be

$$H = \begin{bmatrix} 1 & 1 & 0 & 1 & 1 & 0 & 0 & 0 \\ 0 & 1 & 1 & 1 & 0 & 1 & 0 & 0 \\ 1 & 1 & 1 & 0 & 0 & 0 & 1 & 0 \\ 1 & 0 & 1 & 1 & 0 & 0 & 0 & 1 \end{bmatrix} \tag{2.38}$$

and the generator matrix is

$$G = \begin{bmatrix} 1 & 0 & 0 & 0 & 1 & 0 & 1 & 1 \\ 0 & 1 & 0 & 0 & 1 & 1 & 1 & 0 \\ 0 & 0 & 1 & 0 & 0 & 1 & 1 & 1 \\ 0 & 0 & 0 & 1 & 1 & 1 & 0 & 1 \end{bmatrix} \tag{2.39}$$

Also, the relation between the syndrome vector and the error pattern vector is described in table 2.1.

Having described the previous characteristics of the RM(1,3) code, it is now straightforward the mechanism of encoding and decoding of linear block codes.

syndrome				error pattern							
0	0	0	0	0	0	0	0	0	0	0	0
0	0	0	1	0	0	0	0	0	0	0	1
0	0	1	0	0	0	0	0	0	0	1	0
0	0	1	1	0	0	0	0	0	0	1	1
0	1	0	0	0	0	0	0	0	1	0	0
0	1	0	1	0	0	0	0	0	1	0	1
0	1	1	0	0	0	0	0	0	1	1	0
0	1	1	1	0	0	1	0	0	0	0	0
1	0	0	0	0	0	0	0	1	0	0	0
1	0	0	1	0	0	0	0	1	0	0	1
1	0	1	0	0	0	0	0	1	0	1	0
1	0	1	1	1	0	0	0	0	0	0	0
1	1	0	0	0	1	0	0	0	0	1	0
1	1	0	1	0	0	0	1	0	0	0	0
1	1	1	0	0	1	0	0	0	0	0	0
1	1	1	1	0	1	0	0	0	0	0	1

Table 2.1 : Error pattern vectors relation with the syndromes

Convolutional Codes

The output of a convolutional encoder at any given time unit depends not only on the k inputs but also on m previous outputs; i. e., the encoder has memory. Any convolutional code is characterized by three parameters: the number of inputs k, the number of outputs n, and the number of memory elements m. The code rate of the code is defined as $\frac{k}{n}$. Another important quantity specified in convolutional codes is the code constraint length. It is defined as the largest number of input bits that can affect a single output bit. The constraint length is equal to the product of k and K where K is a memory size parameter equal to the number of memory elements plus one. Figure 2.7 shows an example of a convolutional encoder structure.

Convolutional codes can be expressed in transfer function matrix $G(D)$ where the number of columns in $G(D)$ represents the number of code outputs and the number of rows represents the number of inputs. D represents a delay element. For example, the relation between the jth output to the ith input can be expressed as

$$v_j(l) = u_1(l) + u_1(l-1) + u_1(l-2) = (1 + D + D^2)u_1(l) \qquad (2.40)$$

There are also other methods to represent convolutional codes, namely tree diagrams, state diagrams, and trellis diagrams. Any representation can be obtained from the other and having one representation is sufficient to characterize the code completely. The trellis diagram of the convolutional encoder given in figure 2.7 is shown in figure 2.8.

In communication systems involving no coding schemes the process of getting the information sequence can be summarized as finding the symbol which is closest to the received signal. This is done by evaluating the Euclidean distance between the received signal and all other possible

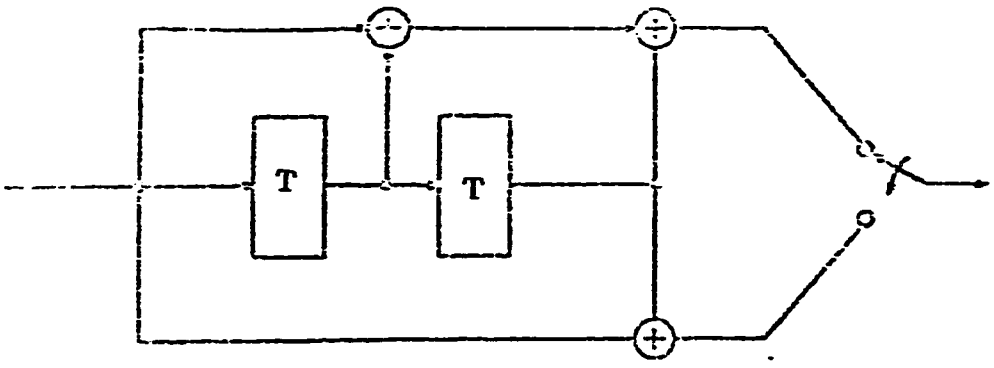

Figure 2.7: A typical convolutional encoder

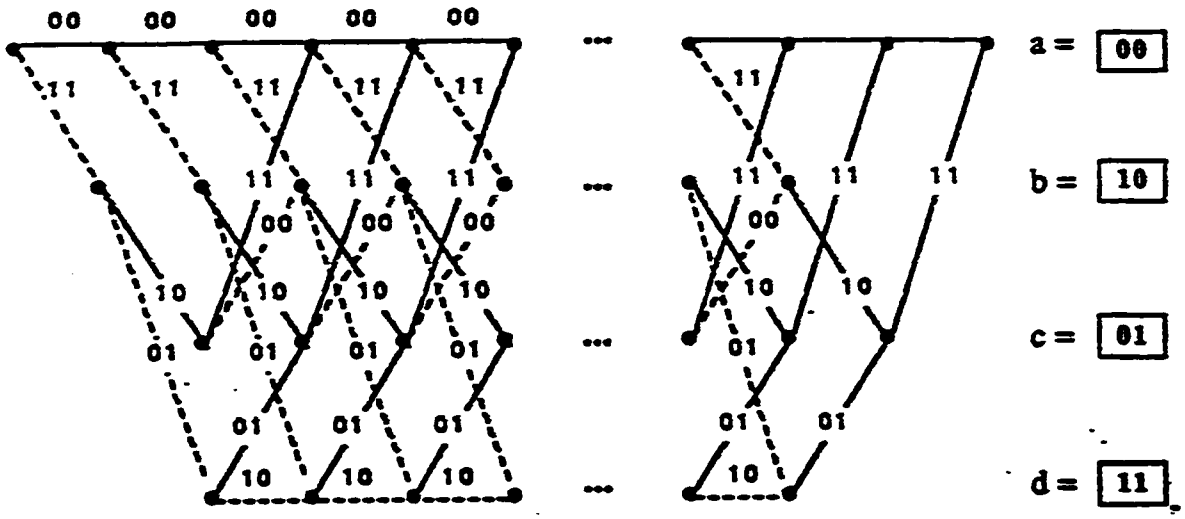

Figure 2.8: The trellis diagram of the convolutional encoder in figure 2.7

transmitted signals and find the minimum value. This is called the minimum distance rule or the maximum likelihood criteria. It is expressed mathematically as

$$\|y(t-KT) - x_k s(t-KT)\|^2 \tag{2.41}$$

where $y(t-KT)$ is the received signal. $s(t-KT)$ is the pulse shaping signal and x_k is the symbol value . If only signal samples are considered, the ML decision rule is expressed as

$$\|y_k - x_i\|^2 \tag{2.42}$$

assuming that the pulse shape has an amplitude of one at the sampling instant. The last quantity is called the metric associated with the observed sample y_k and the transmitted symbol x_i.

If coding is involved, the transmitted sequence symbols are not indenpendent. So, the symbol-by-symbol demodulation is clearly not optimum. In simple decoders the process of demodulation and decoding are seperated from each others and this results in a loss of information. If convolutional codes are used at the encoder stage, basically three techniques could be used at the decoder: sequential decoder, feedback decoder, and Viterbi decoder. The Viterbi decoder is the most widely used one in TCM application because it can implement soft decision decoding algorithms without much complexity as in the other schemes. However, it has two main disadvantages: delay and storage. These problems can be tolerated for codes with only low to moderate constraint lengths. The Viterbi algorithm can be summarized as follows:

1. Compute the branch metric for the single path entering each state.
2. Store the path (survivor) and its metric for each state.
3. Increase the time unit and repeat step one but add the branch metric entering each state to the metric of the connecting survivor at the preceding time unit.
4. Repeat step 2.
5. Repeat step 3.
6. After all the sequence symbols are entered into the decoder find the survivor at the last time unit and then trace back to find the most likely path used. Then, the decoded sequence will be the one that caused the survivor path.

2.7 Summary

In this chapter, the phenomenon of fading is discussed. Modeling of fading channels is also included. Diversity, channel equalization and error control coding are considered as fading countermeasures. However, the problem with error control coding is the bandwidth expansion. However, if coding and modulation are combined into one signle stage no extra bandwidth is needed and the system will perform better than the uncoded system. This is called a combined coding and modulation technique (or usually TCM) and it is the subject of the next chapter.

CHAPTER 3

TRELLIS CODED MODULATION

3.1 Introduction

It is well known that structured sequence codes introduce redundancy in the bit stream to make use of them at the decoder. All these coding techniques aim to reduce the probability of error for a certain SNR or to reduce the required SNR for a certain error probability. One disadvantage of coding is the need for expanded bandwidth for the same data rate or , in other words, a reduction of data rate for the same bandwidth. Any increase in bandwidth will result in an increased noise power at the receiver. Also, for some channels, such as telephone channels, bandwidth expansion is almost impossible. Therefore, the traditional approaches of coding have never been popular for bandlimited channels and a new approach has to be investigated.

A close look at systems involving coding shows that traditional approaches perform two seperate stages of coding and modulation at the transmitter side. Ungerboeck [61] showed that if coding and modulation are combined together in a single process, coding gains of 3 to 6 dB can be achieved without sacrificing the bandwidth or data rate. Combining coding and modulation together means that certain patterns of waveforms are transmitted in order to increase the distance properties of these signals (waveforms). In other words, coding is directly applied in the modulation signal space instead of baseband signal space. Coding can be either block or convolutional. However, since convolutional codes implementing the Viterbi algorithm for soft decision decoding are more efficient than block codes employing soft decision decoding. convolutional encoders are usually used. Such coding/modulation schemes are called signal space codes. If convolutional (trellis) codes are used, the resultant scheme is called trellis coded modulation (TCM). A block diagram of the general TCM encoder/modulator is shown in figure 3.1.

The main idea behind TCM is to use signal-set expansion to provide redundancy for coding. So, the design of the code has to be done jointly with signal mapping as to maximize the "free distance". This takes into consideration the use of soft decision decoding. Hard decision decoding causes an irreversible loss of information at the receiver. However, in soft decision decoding the decoder operates directly on unquantized "soft" output samples. Hard decision decoding is related to the Hamming distance between codewords. However, soft decision decoding deals with the Euclidean distance. The objective of TCM design over AWGN channels is to maximize the Euclidean distance of the code instead of the Hamming distance.

Since TCM results neither in bandwidth expansion nor in reducing

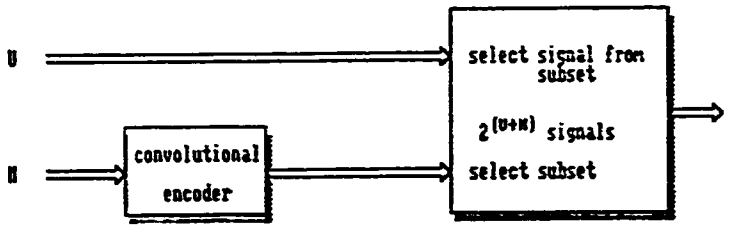

Figure 3.1: A general TCM encode/modulator

the data rate, it is now used in satellite, terrestrial microwave, and mobile communications to increase throughput rate or to permit satisfactory performance at lower SNR. However, the use of TCM results in more complex system designs. Also, more coding gain can be achieved at the expense of deocder complexity.

3.2 Ungerboeck Codes

TCM has been first pioneered by Ungerboeck [61]. He used convolutional codes which have the advantage of simpler decoding algorithms (e.g., Viterbi decoder) that implement soft decision decoding based on the minimum distance measures. So, the received signal is demodulated and decoded in a single step. This eliminates the intermediate decisions about the transmitted symbols. With this scheme, TCM tries to maximize the Euclidean distance (ED) for the code; i.e., signal sequences should have as large distance in the Euclidean space as possible. This goal can be achieved through the following:

1. Expanding the signal set.

2. Using convolutional codes with nonbinary symbols.

The first feature means that more than the required number of signal points for a certain transmission rate is used. For example, in the V.32 modem specifications, the bit rate is 9600 bps while the symbols are transmitted at a rate equal to 2400 symbols per second. This means that the data transmission could be achieved with 16 QAM. However, 32 QAM is used for that system. The increase in the number of points allows redundancy for forward error correction (FEC) without any bandwidth expansion. Ungerboeck [61] showed that by doubling

the signal constellation, almost all the additional channel capacity that can be achieved is obtained.

Second, some kind of interdependency is introduced among the signals. This means that certain patterns (depending on the code used) of signals are permitted. This interdependency can be achieved via coding. Usually, the coding technique is convolutional coding.

The design of the code depends on maximizing the Euclidean distance in the case of AWGN channels. Any convolutional code is fully represented by the trellis diagram. In binary convolutional codes the trellis branches are labeled with binary code symbols. However, in TCM, the trellis branches are labeled with nonbinary modulation signals. Also, each node in the trellis diagram must have M branches stemming from it, where M is the total number of signal points. This is in agreement with binary convolutional codes where each node has two incoming and outgoing branches.

Having this in mind, there is a posibility of having parallel transitions going from one node to another node. To calculate the number of parallel transition the total number of signal points is divided by the number of states in the trellis diagram; the resulting quetient will yield the number of parallel transitions. The existence of parallel transitions limits the achievable free ED to the minimum distance in those subsets of signals assigned to parallel transitions.

The design approach followed by Ungerboeck involves partitioning the constellation of interest succesively with increasing minimum distance. This approach is called mapping by set partitioning. For a 4-8 PSK TCM signal design as shown in figure 3.2, the method of mapping by set partitioning can be summarized [61] as follows

1. All 8-PSK signals should occur with equal frequency and with a fair amount of regularity and symmetry.

2. Transitions originating from the same state receive signals either from subset B_0 or B_1.

3. Transitions joining in the same state receive signals either from subset B_0 or B_1 .

Using thses rules the encoder strucures for 4-state and 8-state 8-PSK systems are shown in figures 3.3 and 3.4, respectively.

The first rule gives the intuition that good codes should posses a regular structure. The other rules guarantee that the trellis transitions assignment gives an imrprovement by at least 3 dB over uncoded 4-PSK modulation. Following the set partitioning approach the best 4-state 8-PSK code gives a coding gain of 3 dB over uncoded 4-PSK system. The minimum free distance for the 4-state code is limited to 2 because of the existence of 2 parallel transitions in the code. It is shown by Forney [22] that the error event probability will approach the lower bound as follows

$$\Pr(e) \geq N(d_{free})Q(d_{free}/2\sigma) \tag{3.1}$$

where $N(d_{free})$ denotes the average multiplicity of error events with distance d_{free} and $Q(.)$ is Q-function error probability function. So, for the 4-state 8-PSK TCM system the error event probability can be stated as

$$\Pr(e) \geq Q(1.0/\sigma) \tag{3.2}$$

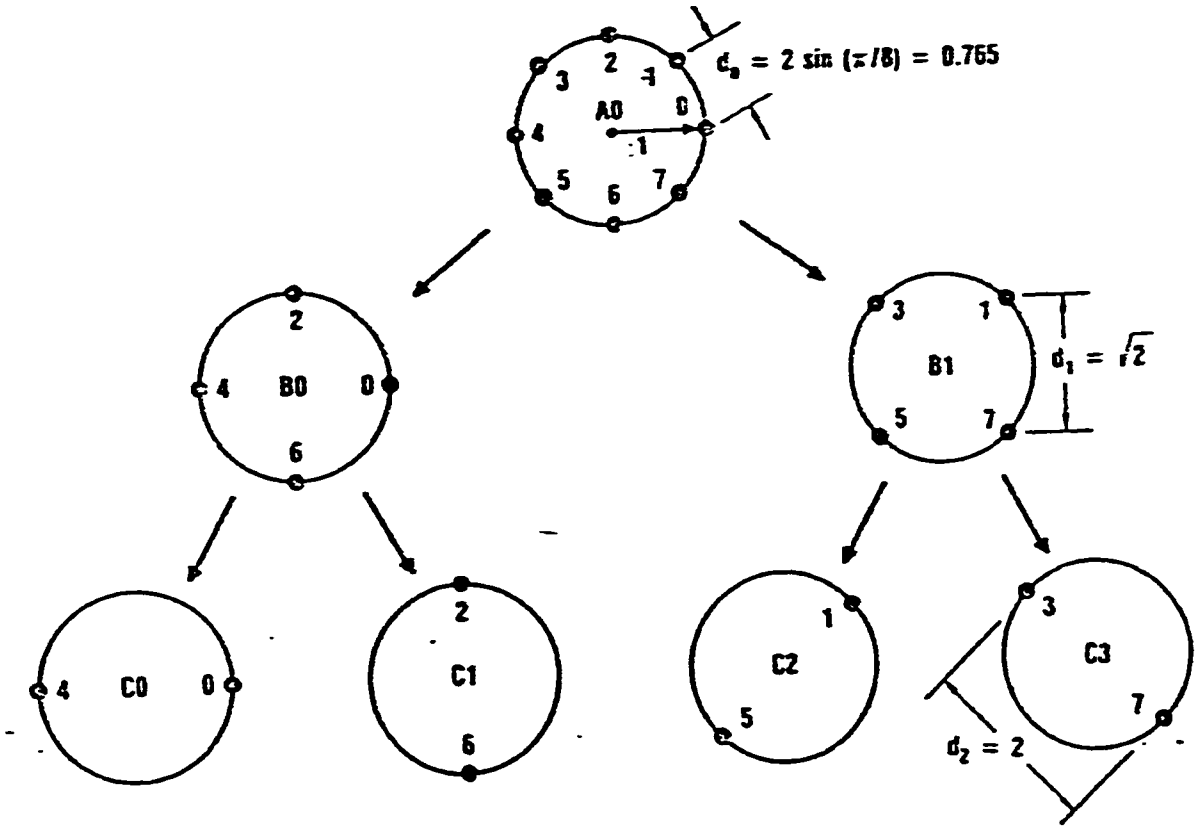

Figure 3.2: Mapping by set partitioning for 8-PSK

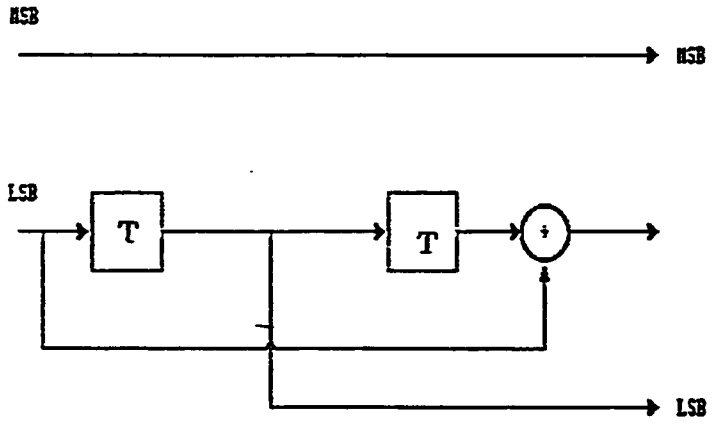

Figure 3.3: Ungerboeck four-state S-PSK encode/modulator

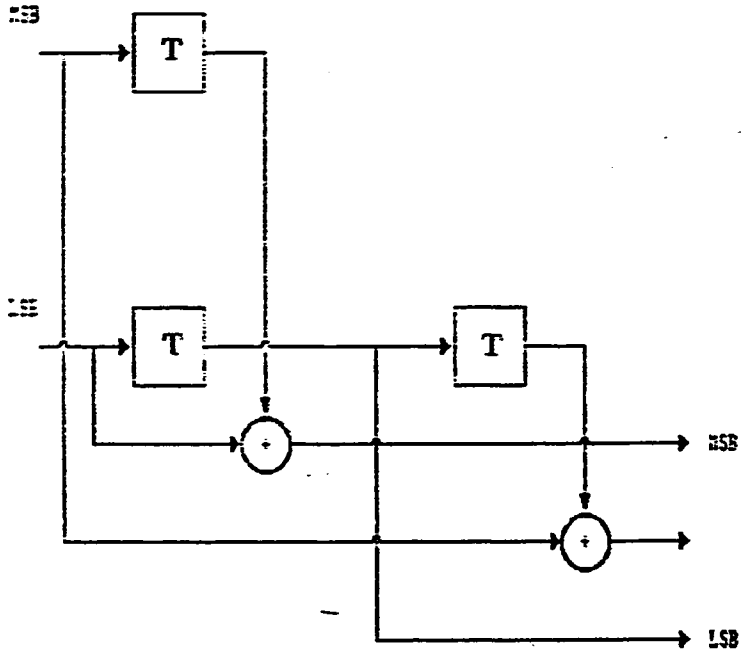

Figure 3.4: Ungerboeck eight-state 8-PSK encode/modulator

For the 8-state 8-PSK TCM system, there are no parallel transitions and the minimum free distance is easily evaluated as $d_{free} = 2.141$. This means that a coding gain of 3.6 dB can be achieved. Similarly, a 16-stae 8-PSK TCM system will give a coding gain of 4.1 dB over uncoded 4-PSK [61]. The design of such coding systems can be viewed as binary convolutional codes with the a specific mapping as dictated by the design. The codes have to implement soft-decision decoding to get the calculated asymptotic gain. The mapping by set partitioning rule can be applied to other modulation techniques. It can be used for 8-16 PSK, 8-16 QAM, 16-32 QAM or any other modulation scheme. In all such schemes the same procedure can be applied and the code can be implemented via a binary convolutional encoder.

Despite the pioneering work of Ungerboeck, these codes suffer from some drawbacks. Any potential ambiguities that might appear at the decoder can seriously degrade the performance. Wei [66,67] has applied differential encoding techniques and ended up with codes that are transparent to signal element rotations of 90- 180- and 270-degrees.

Another drawback of the basic TCM codes is that each signal constellation seems to require a different code. Also, the performance of these codes is just a function of the free Euclidean distance. So, a pragmatic view of TCM has been suggested by Viterbi and others [64]. These codes, called pragmatic TCM codes, will be the topic of the next section.

3.3 Pragmatic Codes

Pragmatic codes, as called by Viterbi and others, have the advantage of using the "industry standard", which provides a high coding gain using a moderately high constraint length. The encoder/modulator for

QPSK, 8-PSK, 16-PSK is shown in figure 3.5 . It is clear that only the lowest order bit goes into the 1/2 convolutional encoder, while the remaining $k-2$ bits select one of the 2^{k-2} sectors. The definition of a sector depends on the number of signal points. For 8-PSK a sector is a half-plane, while it is a quadrant for 16-PSK.

The convolutional encoder receives one bit and outputs two bits which select one of four phases according to the following Gray code:

$$\begin{aligned} 00 &\rightarrow \quad 0 \quad rad \\ 01 &\rightarrow \quad \pi/2^{k-1} \quad rad \\ 11 &\rightarrow \quad 2\pi/2^{k-1} \quad rad \\ 10 &\rightarrow \quad 3\pi/2^{k-1} \quad rad \end{aligned} \tag{3.3}$$

The code chosen is the optimum rate 1/2, 64 state, binary convolutional encoder. This encoder has been implemented as a VLSI chip [64]. Also, it can be inverted into a rate 3/4, 7/8, or $(n-1)/n$ code. The convolutional code has the following transfer functions:

$$\begin{aligned} G_1(D) &= 1 + D^2 + D^3 + D^4 + D^5 \\ G_2(D) &= 1 + D + D^2 + D^3 + D^6 \end{aligned} \tag{3.4}$$

The asymptotic coding gain (ACG) has been derived [64] as

$$ACG \geq 10 \log_{10}(4Min[\cos^2(\frac{2\pi}{M})\frac{1}{2} + \frac{3}{8\cos^2(\frac{\pi}{M})}]) \quad M \geq 8 \tag{3.5}$$

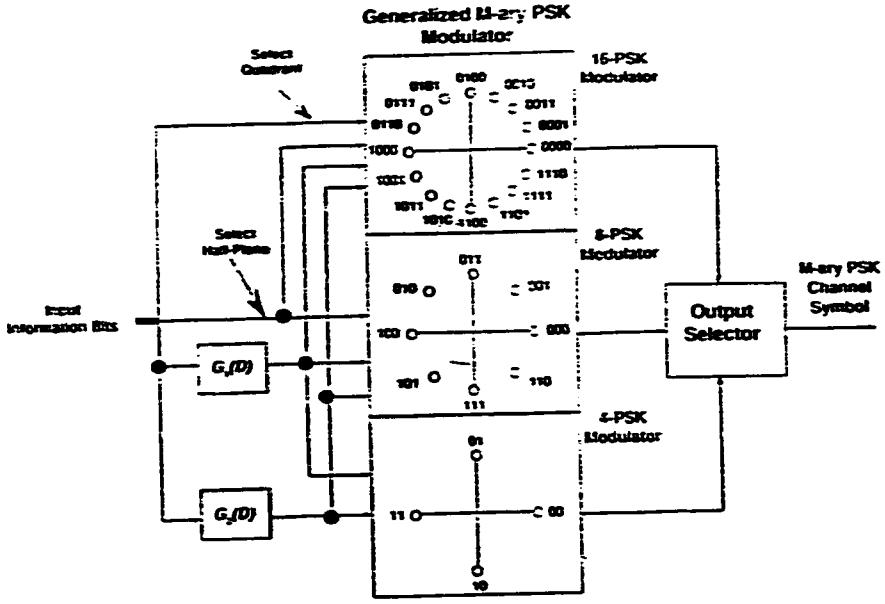

Figure 3.5: The pragmatic encode/modulator for 4, 8, and 16 PSK [64]

with equality if the minimum is achieved by the first term.

For QAM techniques, the pragmatic code design is to take each dimension and encode it seperately. This means that this encoding method can be viewed as one-dimensional modulation. This produces the same performance as the best Ungerboeck codes do for QAM(It is referred as QASK in [61,64]). The main advantage of this approach is that a single rate 1/2 encoder-decoder, with only moderate modifications can provide the gain for a variety of trellis codes.

A comparison between Ungerboeck and pragmatic codes yields that the two sets of codes give almost the same performance. However, the implementation of pragmatic codes is more simpler and more flexible. One problem with trellis codes is the phase ambiguities. Using a form of differnetial encoder/decoder, any phase ambiguity of the form $\frac{2\pi}{M}$, $\frac{4\pi}{M}$, ... $\frac{(M-1)\pi}{M}$ can be resolved [64].

3.4 Other TCM Schemes

The development of TCM resulted in various schemes other than those developed by Ungerboeck [61] and Viterbi and et. al. [64]. One technique is to optimize the code by designing signal constellation to be asymmetric (non-uniformly spaced). The use of assymetric modulation has been exposed by Simon and Divsalar [19]. The use of asymmetric modulation gives a superior performance than the conventional ungerboeck codes.

It is clear that as the number of dimensions used for transmission is increased, the distance between signal points increases. This results in a better performance and hence suggests the use of TCM in conjunction with multidimensional modulation. The use of TCM with multidimensional constellations has been described by Wei [68]. The use of such

schemes results in easier tolerance to phase ambiguities, better trade-off between complexity and coding gain.

Moreover, other TCM encoders have been designed for certain types of channels. A rotationally invariant code was used in the CCITT V.32 modem specifications to enhance the performance against phase amibuities [66,67] . Also, TCM encoders have diverse applications for different types of channels [2]. For example, the performance of trellis-coded M-PSK over Rician fading mobile satellite channels has been discussed in [2]. Also, the design of TCM systems for fading channels has been optimized as a function of other parameters. It was shown that d_{free} is not the only parameter that controls the performance of TCM over Rician fading channels. For low values of K, the Rician parameter, the design depends on the length of the shortest error event path an the product of branch distances along that path. These quantities have to be maximized. For high values of K the significance of these paramters reduces and the importance of d_{free} increases. In the limit, $K \rightarrow \infty$, The only parameter that plays role in the performance is the free Euclidean distance d_{free}.

3.5 Summary

In this chapter, the basic theory of TCM is presented. Simple Ungerboeck codes are shown. The mapping by set partitioning rule is explained. The disadvantages of Ungerboeck codes are mentioned. Pragmatic codes are also presented. Several other newly developed schemes are introduced.

Having described the theory of error correcting codes and trellis coded modulation techniques, the next chapter will elaborate on their performance over slow fading channels.

CHAPTER FOUR

PERFORMANCE OVER SLOW FRQUENCY NON-SELECTIVE FADING CHANNELS

4.1 Introduction

Frequency non-selective means that a multiplicative distortion of the transmitted signal gives variations in the amplitude of the signal. Also, the assumption that the channel fades slowly implies that the multiplicative process may be regarded as a constant during at least one signaling interval. Therefore, if the transmitted low-pass signal is $s(t)$, the received low-pass signal in one signaling interval is

$$r(t) = \alpha e^{-i\phi} s(t) + n(t) \qquad 0 \leq t \leq T \tag{4.6}$$

where $n(t)$ is the low-pass representation of the additive white Gaussian noise. If we assume that the channel fading is sufficiently slow so that the phase shift ϕ can be eliminated from the received signal without error, ideal coherent detection can be achieved. The bit error probability for BPSK and QPSK can be obtained through integrating the probability of error for the AWGN case over the distribution of the amplitude. Therefore, the probability of bit error can be written as [45]

$$P_b = \frac{1}{2}\left[1 - \sqrt{\frac{E[\alpha^2]\frac{E_b}{N_0}}{1 + E[\alpha^2]\frac{E_b}{N_0}}}\right] \tag{4.7}$$

This expression for P_b is equivalent for both BPSK and QPSK, and it is consistent with the probability of error expressions where the channel effect is modeled by AWGN only; i.e., P_b is the same for BPSK and QPSK systems for nonfading AWGN channels.

In this chapter, the effect of using an outer code besides an inner TCM code is derived. For frequency non-selective slowly varying Rayleigh distrubted fading channels, concatenated codes (an outer code and an inner code and no TCM is involved) are very effective in reducing the energy requirement for achieving reliable communications. However, this technique suffers from the dramatic decrease in the data rate. If a TCM code is used instead of a conventional inner code, a higher data rate can be obtained and yet almost the same performance can be achieved. This chapter is organized as follows. The next section deals with the performance improvement using only single block codes. Then, the performance enhancement using TCM codes as inner codes is derived. Two types of signaling are considered: QPSK and 8-PSK.

4.2 Effect of Using Block Codes

To get the bit error probability when coding is applied and hard decision decoding is used at the receiver, let us assume first that the code is perfect; so, the probability that a codeword is incorrectly decoded is [55]

$$P_M = \sum_{i=t+1}^{n} \binom{n}{i} p^i (1-p)^{n-i} \tag{4.8}$$

where p is the probability of error as a function of $\frac{E_c}{N_0}$ where $E_c = \frac{k}{n} E_b$, and t is the error correcting capability of the code. The probability of bit error can be approximated by [56]

$$P_b = \frac{1}{n} \sum_{i=t+1}^{n} i \binom{n}{i} p^i (1-p)^{n-i} \tag{4.9}$$

On the other hand, quasiperfect codes are those codes that can correctly decode all codewords having a distance t or less from the transmitted codeword and also decode some codewords with a distance $t+1$ from the transmitted codeword. However, any codeword with a distance $t+2$ or higher from the transmitted codeword can not be deocded correctly. Therefore, each sphere of the 2^k spheres is enlarged by the addition of

$$\beta_{t+1} = 2^{n-k} - \sum_{i=0}^{t} \binom{n}{i} \tag{4.10}$$

codewords having a distance $t + 1$ from the transmitted ocdeword. Therefore, the probability that a codeword is decoded incorrectly for a quasiperfect code may be bounded [45] as

$$\sum_{i=t+2}^{n} \binom{n}{i} p^i (1-p)^{n-i} \leq P_M \leq \sum_{i=t+1}^{n} \binom{n}{i} p^i (1-p)^{n-i} \qquad (4.11)$$

In fact, the probability of a codeword error can be exactly written [45] as

$$P_M = \sum_{i=t+1}^{n} \binom{n}{i} p^i (1-p)^{n-i} - \beta_{t+1} p^{t+1} (1-p)^{n-t-1} \qquad (4.12)$$

To see the improvement obtained using block codes where the channel is modeled as Rayleigh distributed, figure 4.1 shows the performace of uncoded BPSK, BPSK with a RM(1,3) and BPSK with a Golay(23,12) code. The performance of these codes can be obtained by applying the previous equaitons for P_b since the frequency non-selective slowly varying Rayleigh distributed channel with statistically fading of the symbols can be modeled as a memoryless BSC.

It is clear that using the Golay (23,12) code $P_b = 10^{-5}$ can be achieved using $\frac{E_b}{N_0} = 17$ dB whereas ths same performance can be obtained using the RM(1,3) code at $\frac{E_b}{N_0} = 25.5$ dB. This suggests that Coding is very essential for communication over Rayleigh distributed fading channels. The performance over QPSK is similar since P_b vs. $\frac{E_b}{N_0}$ is exactly the same as that for BPSK and hard decision decoding is used where there is no attention paid to the modulation scheme.

The disadvantage of using block codes is the lowered data rate which

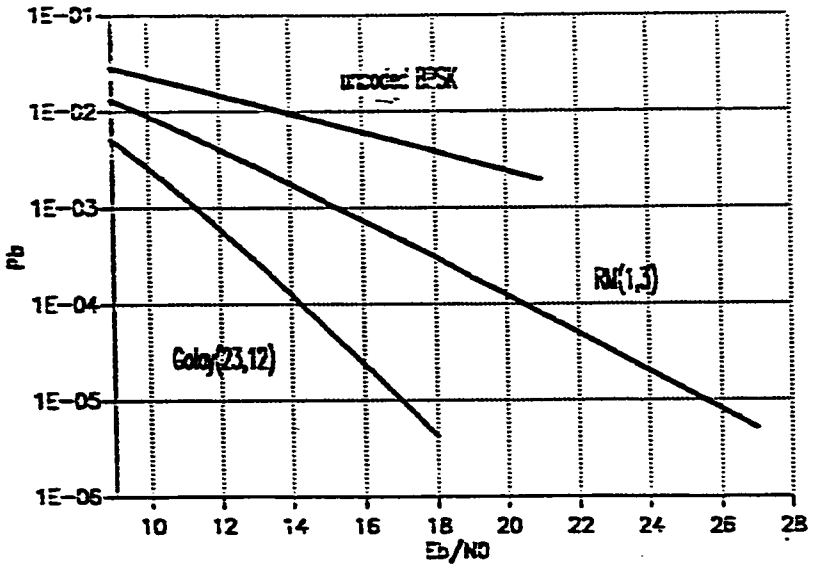

Figure 4.1: Performance of Golay (23,12) and RM(1,3) over Rayleigh fading with BPSK

results in a lowered bandwidth efficiency. For example, BPSK has a bandwidth efficiency of 1 bit/sec/Hz. If an RM(1,3) code is used the bandwidth efficiency is lowered to 0.5 bit/sec/Hz. This effect on the data rate can not be tolerated in channels where bandwidth is very limited. Another disadvantage is the use of hard decision decoding which gives a loss in the received information, thus reducing the efficiency of the code. Soft decision decoding can be used but, as mentioned before, they have very complex algorithms which increase the cost of the system dramatically. To counteract these effects, the use of TCM with soft decision decoding, easily implemented on Viterbi decoders, is strongly recomended. The effects of using TCM instead of block codes is described in the next section.

4.3 Impact of Using Inner TCM Codes

4.3.1 4-state QPSK signaling

It has been shown in the literature [9] that the probability of bit error over slow Rayleigh distributed fading channel for an MPSK system employing a TCM can be upper bounded. The derivation of the upper bound for P_b utilizes the generating function approach. The bit error probability can be bounded as

$$P_b \leq \frac{1}{25} \frac{\partial T(D_1, ..., D_{M/2}, I)}{\partial I}\Bigg|_{I=1, D_m = Z_m, m=1,...,\frac{M}{2}} \tag{4.13}$$

where

$$Z_m = \frac{1}{1 + \frac{bE_b(1-\cos\theta_m)}{2N_0}} \tag{4.14}$$

and

$$\theta_m = \frac{2m\pi}{M} \tag{4.15}$$

and D_i denotes the Hamming distance (of value $=i$) of the sequence of output bits corresponding to each branch from the sequence of output bits corresponding to the all-zero branch. I is associated with every branch transition caused by the input bit 1. T is the generating function [9].

The above technique can be applied for a binary PSK system that uses QPSK signaling with a rate $\frac{k}{n} = \frac{1}{2}$ encoder having a constraint length $K = 3$ as shown in figure 4.2 and utilizes Gray mapping of signals.

The generating function is first expressed as

$$\begin{aligned} T(D_1, D_2, I) &= \frac{D_1 D_2^2 I}{1 - 2D_1 I} \\ k &= 1, n = 2, M = 4 \end{aligned} \tag{4.16}$$

So, the derivative of T with respect to I can be evaluated as

$$\frac{\partial T(D_1, D_2, I)}{\partial I} = \frac{D_1 D_2^2}{(1 - 2D_1 I)^2} \tag{4.17}$$

and the values of Z_1 and Z_2 are

$$Z_1 = \frac{1}{1 + \frac{E_b}{2N_0}} \qquad Z_2 = \frac{1}{1 + \frac{E_b}{N_0}} \tag{4.18}$$

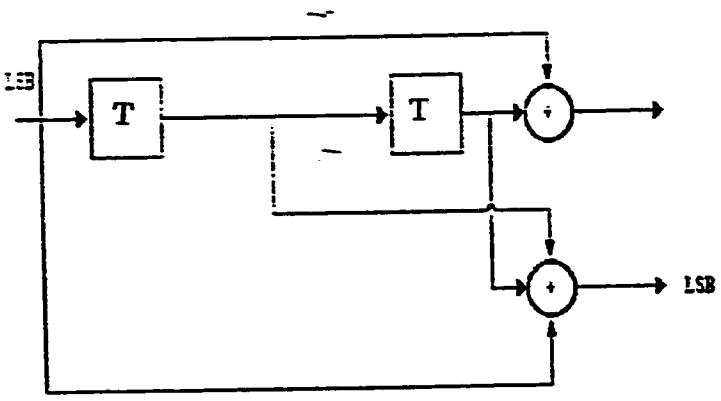

Figure 4.2: The four-state QPSK encoder used

where $E[\alpha^2]$ is made eual to one. Therefore, the bit probability of error can be upper bounded as

$$P_b \leq \frac{1}{2}\left[\frac{\left(\frac{1}{1+\frac{E_b}{2N_0}}\right)\left(\frac{1}{1+\frac{E_b}{N_0}}\right)^2}{\left(1-2\left(\frac{1}{1+\frac{E_b}{2N_0}}\right)\right)^2}\right] \tag{4.19}$$

Now, to find the effect of using an outer block code prior to the inner encoder, equation (4.7) is used to evaluate the system probability of bit error. First, let P be upper bounded by a certain value x; i.e.,

$$P \leq x \tag{4.20}$$

Then, if $f(.)$ is a monotonic increasing function in the region of interset, $f(P) = P_b$ can be upper bounded as

$$P_b \leq f(x) \tag{4.21}$$

The block codes used have the P_b relation mentioned in equation (4.7) and the function P_b is monotonic increasing function in the region of the probability of error values (0,1). This is illustrated in figure 4.3 for the two outer codes used here. This means that P_b for a system implementing both an inner an outer code can be found first by taking the effect of the inner code which is represented by an upper bound on the error probability and then use the exact/approximate expression for the evaluation of the probability of error of the compound system.

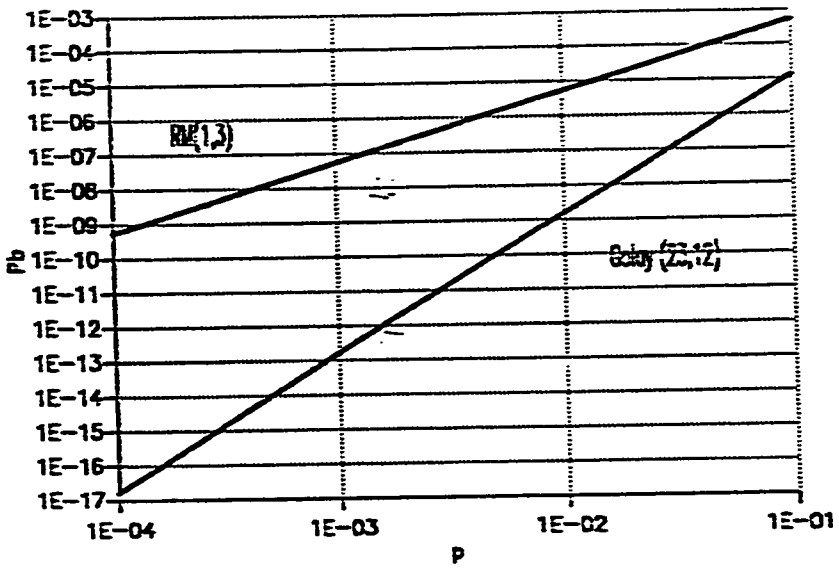

Figure 4.3: The monotonic relation of P_b vs. p

The effect of using a Reed-Muller (1,3) code , a Golay(23,12) code are shown in figure 4.4.

It is clear that the use of TCM only gives an excellent coding gain with respect to uncoded systems. For a BPSK system with no coding $P_b = 10^{-5}$ can be achieved at $\frac{E_b}{N_0} = 43.98$ dB. However, with the use of a four state TCM with QPSK signaling, the same P_b can be achieved at $\frac{E_b}{N_0} = 17$ dB. This means that TCM is very effective for channels modeled with the Rayleigh distribution. These results are not surprising since in general coding is much more effective for Rayleigh distributed channels rather than simple AWGN channels.

With the use of an outer code, $P_b = 10^{-5}$ can be achieved with even smaller values of $\frac{E_b}{N_0}$. It can be seen from figure 4.4 that using an RM(1,3) code $P_b = 10^{-5}$can be achieved at $\frac{E_b}{N_0} = 13$ dB. Moreover, the use of the Golay(23,12) code can achieve the same performance at $\frac{E_b}{N_0} = 10.6$ dB. However, the price to be paid by using an outer code is the reduction of the data rate, or in other words, expansion in bandwidth. This scheme is still better than using two codes (inner and outer) which gives a lower rate (1/3 or even 1/4).

4.3.2 Effect of increasing the constraint length

The performacne of any TCM or convolutional code is proportional to the value of the constraint length. This is because the constriant length value determines the distance properties of the code. This is consistent also if an outer code is used. Figure 4.5 iluustrates the use of different constraint lengths at the TCM encoder where an RM(1,3) is used as an outer code. It is clear that with $K = 7$ (64 states), an error probability of 10^{-5} can be achieved with $\frac{E_b}{N_0}$ equal to as low as 9.6 dB. This represents the superior performance obtained using

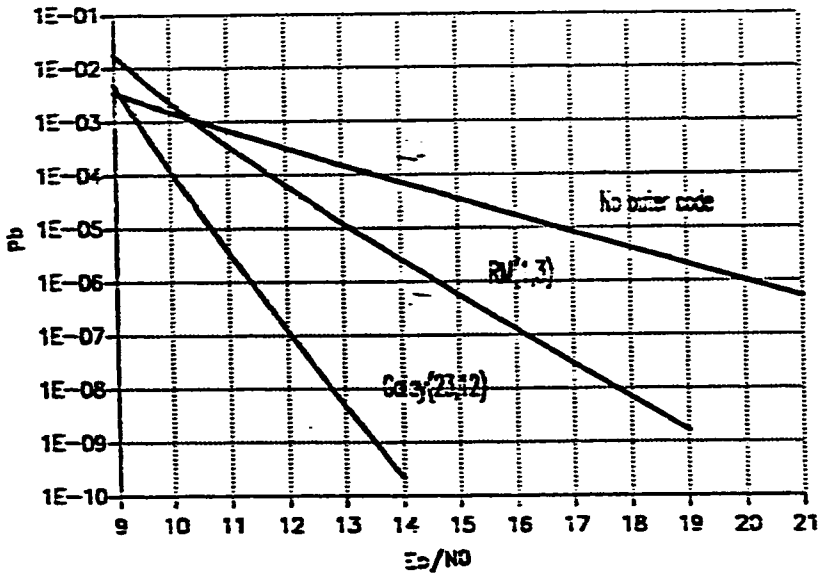

Figure 4.4: P_b for four-state TCM with QPSK signaling and two different outer codes

this combination of codes with the only disadvantage of .5 bit/s/Hz bandwidth defficiency.

4.3.3 8-PSK signaling

The effect of using 4 and 8 state TCM inner codes with the RM(1,3) and Golay (23,12) outer codes is illustrated. In the case of a four-state 8-PSk encoder where the previous four-state encoder for QPSK signaling is used, the most significant bit is uncoded so that its transmission determines the half-plane in the signal space. The encoder of this system is shown in figure 4.6.

The probability of error can be derived easily (Appendix B) to be upper bounded as

$$P_b \leq \frac{1}{2}\left[\frac{\left(\frac{1}{1+\frac{E_b 2\sqrt{2}}{4N_0}}\right)\left(\frac{1}{1+\frac{E_b}{2N_0}}\right)^2}{\left(1-2\left(\frac{1}{1+\frac{E_b 2\sqrt{2}}{4N_0}}\right)\right)^2}\right] \tag{4.22}$$

Then, evaluating the performance improvement due to the outer code results in the performance curves shown in figure 4.7. it can be inferred that using a four-state TCM with an outer Golay (23,12) can achieve $P_b = 10^{-5}$ at $\frac{E_b}{N_0}$ of 15 dB which represents a quite large amount of coding gain.

To improve the performance of the previous system the number of states of the TCM encoder can be increased to 8. This gives an 8-state 8-PSK system as shown in figure 4.8. The performance of this system is shown in figure 4.9. It is clear that $P_b = 10^{-5}$ can be achieved at $\frac{E_b}{N_0} = 16.7$ dB using the RM(1,3) code and at $\frac{E_b}{N_0} = 14.3$ dB using the Golay (23,12) code.

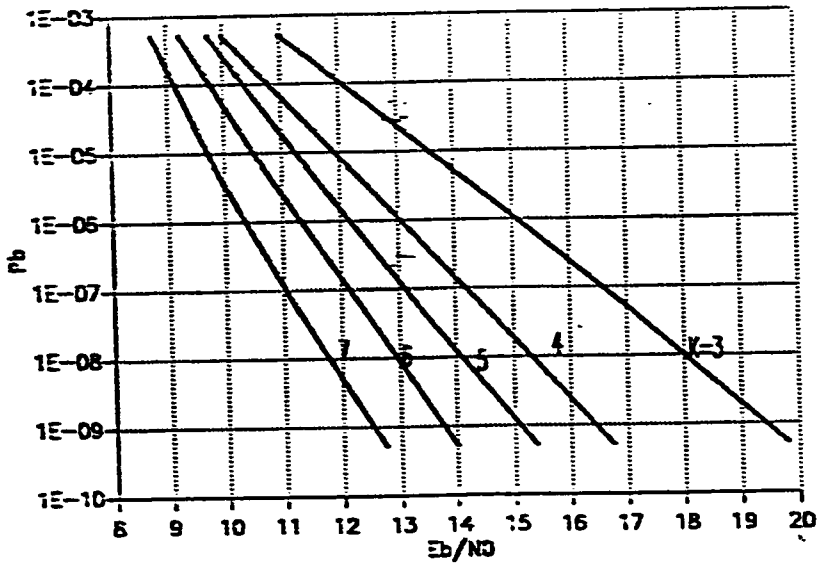

Figure 4.5: P_b for TCM with QPSK signaling with different constraint lengths and an outer RM(1,3) code

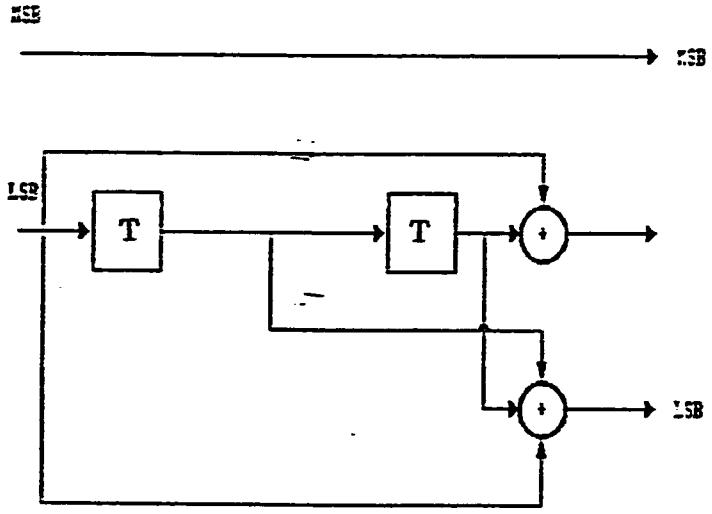

Figure 4.6: The 4-state TCM used with 8-PSK

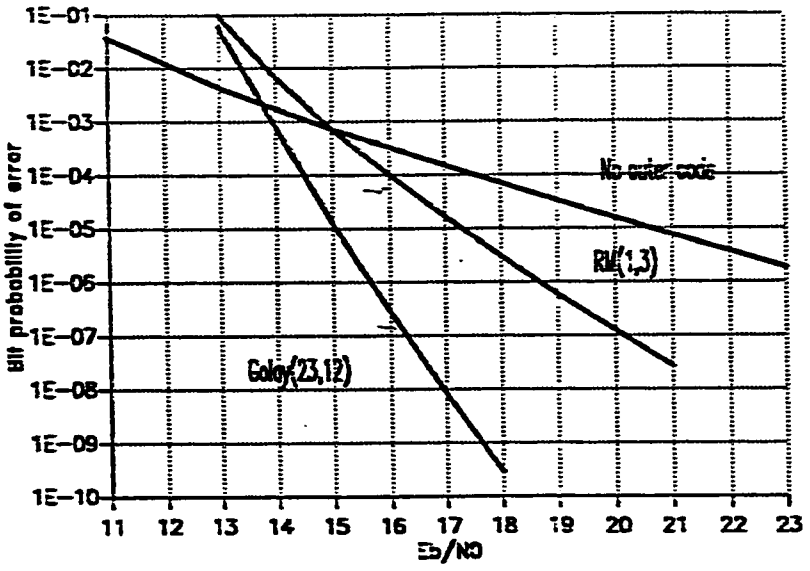

Figure 4.7: P_b for four-state TCM with 8-PSK signaling and two different outer codes

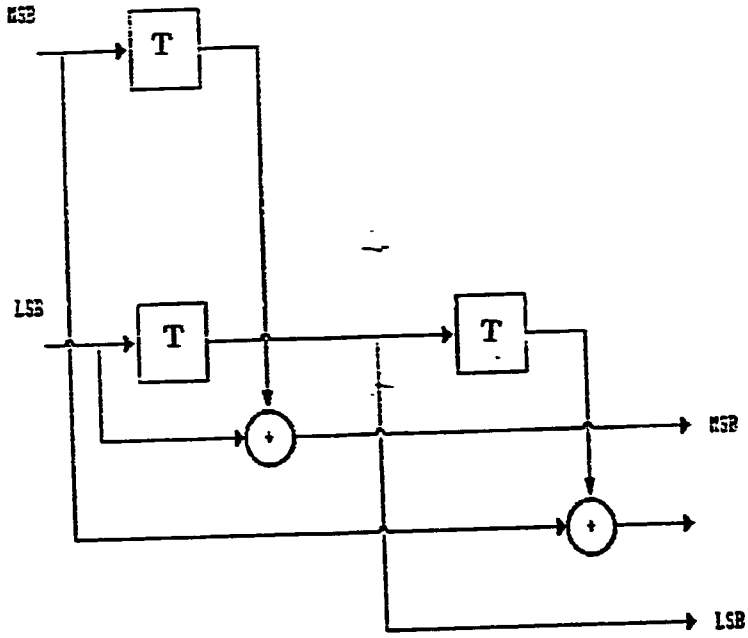

Figure 4.8: The 8-state TCM used with 8-PSK

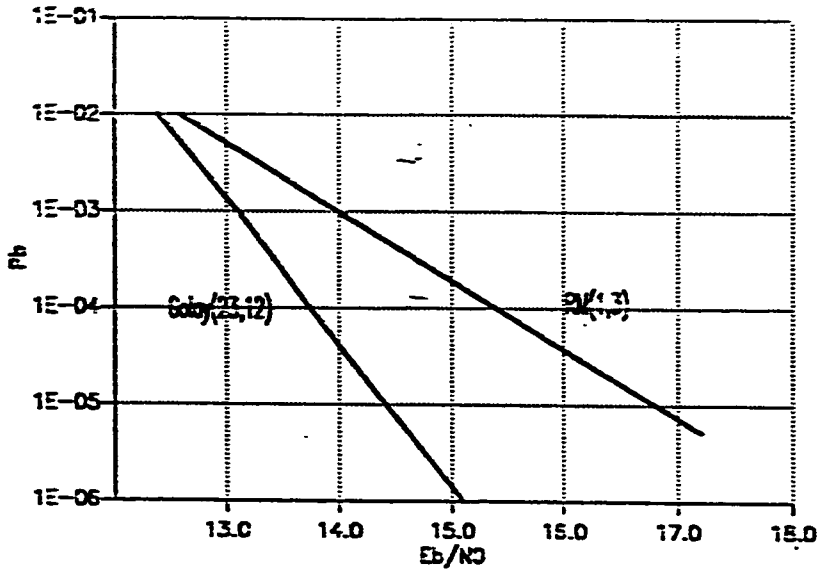

Figure 4.9: P_b for 8-state TCM with 8-PSK signaling and two different outer codes

4.4 Comparisons

The effect of increasing the constraint length versus using an outer code with moderate constraint length inner codes is also investigated. In this case all systems have to be working at the same bandwidth efficiency, namely 1 bit/sec/Hz. Therefore, the preformance of a BPSK to QPSK systems with 4, 8, 16 and 32 states are compared to an 8-state QPSK to 8-PSK system with an outer code. This comparison is shown in figure 4.10. It is clear that the rate of decrease in the P_b vs. $\frac{E_b}{N_0}$ of the latter system (with the outer code) is faster than all other systems. Also, for systems requiring very low bit error probabilities (10^{-6} to 10^{-9}) as in satellite communications [14], the system with the outer code gives a superior performance than the other systems.

4.5 Summary

The performance improvement of using outer codes with inner TCM encoders/modulators is evaluated. The performance improvement is around 30 dB and the systems are operating at .5 or 1 bit/sec/Hz. The channel model that is used is the slow frequency non-selective Rayleigh distributed fading channel model. In the next chapter, The effect of coding an equalization is simulated over frequency selective channels.

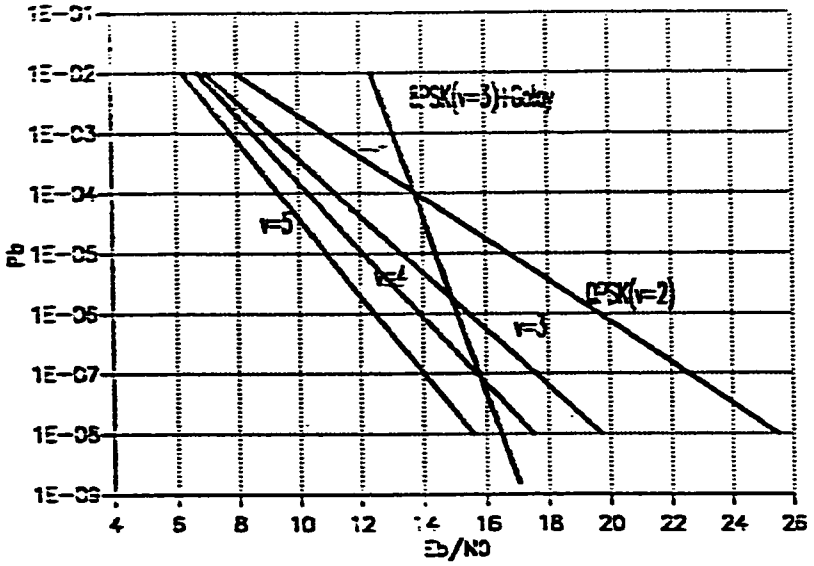

Figure 4.10: Effect of increasing the constraint length vs. the use of an outer code

CHAPTER FIVE

PERFORMANCE OVER SLOW FREQUENCY-SELECTIVE FADING CHANNELS

5.1 Introduction

In this chapter the effect of frequency selective fading on specific digital signaling systems is evaluated using computer simulation. The systems treated here are bandpass systems that use digital signaling to transmit digital data. Computer simulations provide the only alternative approach to hardware eavaluation in cases where the system might be too complicated to analyze or the used channel model is obtained via experimental work.

Although bandpass systems are considered here, simulation is performed on their equivalent baseband structure without any loss of generality. In this case the modulator is equivalent to a signal space (or waveform) encoder, and the demodulation is equivalent to the slicing process. A brief discussion of the baseband representation is given below.

5.2 Baseband Representation

Digital signaling systems are bandpass. However, equivalent baseband models are often used in simulations. This approach eliminates the need of simulating the carrier frequency component. Complete baseband representation is contained in [27]. However, the results here are shown for completeness. Any bandpass signal can be represented as

$$s(t) = Re[\hat{s}(t)e^{j2\pi f_c t}] \tag{5.23}$$

where f_c is the carrier frequency component and Re[.] denotes the real part of the quantity enclosed in brackets. The baseband signal $\hat{s}(t)$ is a complex signal and equals

$$\hat{s}(t) = s_I(t) + js_Q(t) \tag{5.24}$$

where $s_I(t)$ and $s_Q(t)$ are called the in-phase and quadrature components, respectively. The quantity $\hat{s}(t)$ is called the complex envelope of the signal. Noise can be also represented by its complex envelope as

$$\hat{n}(t) = n_I(t) + jn_Q(t) \tag{5.25}$$

where $n_I(t)$ and $n_Q(t)$ are modeled as sample functions of independent zero-mean white Gaussian random processes with each one having a power spectral density (PSD) of $N_0/2$ watts/Hz. The effect of the channel is taken from

$$h(t) = 2Re[\hat{h}(t)e^{j2\pi f_c t}] \tag{5.26}$$

where

$$\hat{h}(t) = h_I(t) + jh_Q(t) \tag{5.27}$$

This representation of the channel can be obtained by taking the positive side of the channel frequency spectrum and translate it down from f_c to zero without scaling the function. Finally, the output signal is represented by

$$\hat{x}(t) = \hat{s}(t) \otimes \hat{h}(t) + \hat{n}(t) \tag{5.28}$$

where $\otimes$ stands for the convolution operation.

5.3 System Description

The system under consideration is illustrated in figure 5.1. It con-

sists of a source generator, an outer encoder, a pulse shaping filter, a combined encoder and modulator, a channel, a receiving filter, a demodulator, an equalizer, an inner decoder, an outer decoder, and finally a sink. Certain blocks are removed to test the performance with and without them. These blocks are the outer encoder/decoder and the equalizer.

The system input symbols are assumed to be equally likely and adjacent symbols are statistically independent. They are generated by a pseudo-noise generator (PN generator). PN sequences are generated by linear feedback shift registers. They are governed by the relation

$$x_k = h_1 x_{k-1} \ominus \ldots \ominus h_n x_{k-n} \tag{5.29}$$

where the summation is modulo-two and the values of the x_i's and h_i's are binary. From the previous relation the transfer function of the shift registers is found to be [31]

$$h(D) = 1 \ominus h_1 D \oplus \ldots \oplus h_n D^n \tag{5.30}$$

If the transfer function polynomial is irreducible the corresponding linear feedback shift register (LFSR) configuration will give a linear-maximal sequence. One of the commonly used LFSR ciruits is the V.32 call mode modem generating polynomial. The generating function is

$$h(D) = 1 \ominus D^{18} \oplus D^{23} \tag{5.31}$$

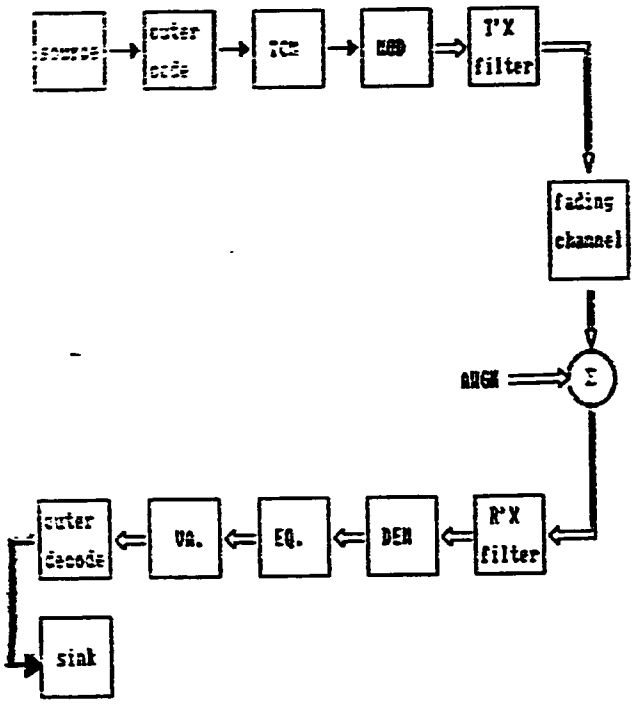

Figure 5.1: The system block diagram

This function can gnerate a sequence of $2^{23} - 1$ bits before repeating the same sequence. This sequence is enough for the simulation used. The shift register conncetions for the used PN sequence generator is shown in figure 5.2.

The outer code used is the Reed-Muller (RM) (1,3) code. This code is equivalent to the extended Hamming (8,4) code and can correct all patterns with single errors and one-fourth of double-error patterns. The code characteristics were given in chapter two. The deocder of the RM(1,3) code implements the normal standard array decoding which needs to store the parity check matrix and the 16 error pattern vectors. However, it should be mentioned that RM codes have much simpler decoding algorithms in terms of hardware implementations. This justifies why RM codes are more attrctive than others. Nevertheless, in doing the simulation the use of standard array decoding is sufficient.

The decoder of the outer code implements hard decision decoding. Hard decision decoding is inferior than soft decision decoding. However, linear codes, in general, have very complex soft decision decoding algorithms which increase the cost of the system subsequentially. Therefore, linear codes usually implement hard decision decoding for its simplicity compared to soft-decision decoding.

The pulse shaping (transmit) filter is used to limit the transmission bandwidth and yet give zero ISI. The filter roll-off factor is $\rho = 0.3$. This value of ρ is used in many commercial systems [5]. This gives 30% expansion in bandwidth as shown in figure 5.3. The receive filter is matched to the transmit filter and is used to limit the noise.

Since a large amount of the coding gain is associated with 4-state

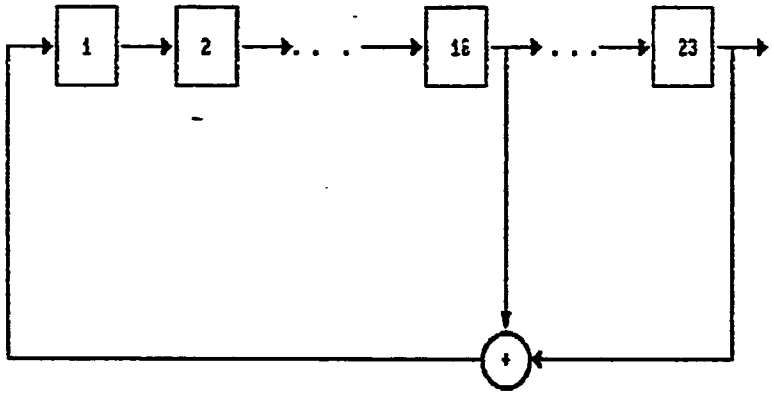

Figure 5.2: The V.32 call mode modem generating function

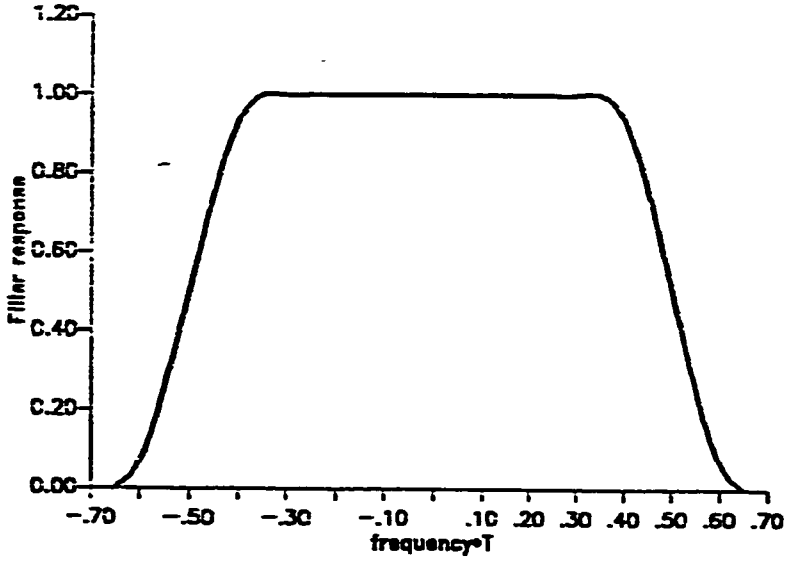

Figure 5.3: Frquency spectrum of the transmit filter $\rho = 0.3$

TCM encoders, a 4 to 8-PSK encoder/modulator is used in the system to reduce the complexity of the system and yet result in a quite noticable coding gain. The TCM system can be implmented using a suitable convolutional encoder and increasing the signal set. Such a convolutional encoder is shown in figure 5.4. Demodulation and decoding are done based on the maximum likelihood criterion and soft-decision decoding. This is because convolutional codes with moderate constraint length use the Viterbi algorithm at the decoder.It is well known that the Viterbi algorithm implements soft decision decoding in much the same way as it implements hard decision decoding; i.e., the decoder complexity is not increased dramatically if soft decision decoding is used.

The channel considered here is the simplified three-path transfer function which was given by Rummler [50] in 1979. This model is widely accepted to represent frquecny selective fading channels and gives a very good fit to experimental collected data. The characteristics of the channel are described previously but now the lowpass representation will be given. Since the channel is measured around the carrier frequency, the transfer function center can be translated down to the zero frequency without scaling the function. So, the lowpass transfer function of the channel is

$$\hat{H}(f) = a(1 - be^{-j2\pi(f-f_0)}) \tag{5.32}$$

where f is measured around zero. If the inverse Fourier transform is taken, the complex envelope of the impulse response of the channel is

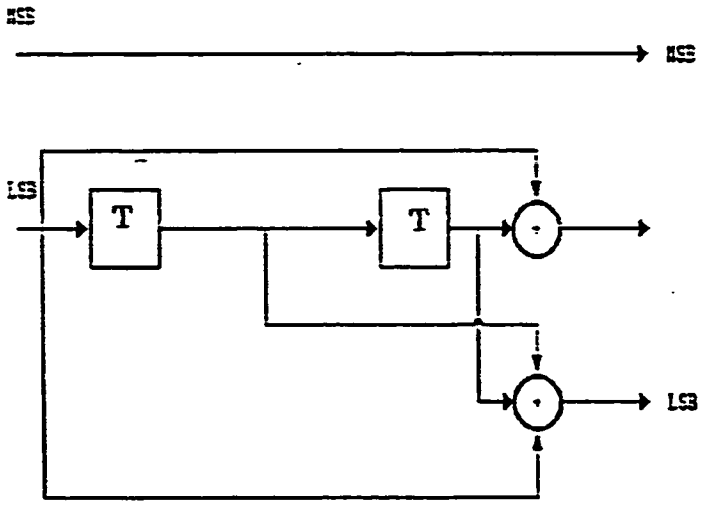

Figure 5.4: The 4-state TCM encoder

$$\hat{h}(t) = a\delta(t) - ab\delta(t-\tau)e^{j2\pi f_0\tau} \tag{5.33}$$

This function can be represented as

$$\hat{h}(t) = \{a\delta(t) - ab\delta(t-\tau)\cos(2\pi f_0\tau)\} + j\{-ab\delta(t-\tau)\sin(2\pi f_0\tau)\} \tag{5.34}$$

Therfore, the in-phase and quadrature components of the impulse repsonse of the channel can be written as

$$h_I(t) = \{a\delta(t) - ab\delta(t-\tau)\cos(2\pi f_0\tau)\} \tag{5.35}$$

and

$$h_Q(t) = -ab\delta(t-\tau)\sin(2\pi f_0\tau) \tag{5.36}$$

respectively. Let the transmitted signal over one interval be represented by its complex envelope notation as follows

$$\hat{s}(t) = \sqrt{E_s}(s_I + js_Q)g(t) \tag{5.37}$$

where $g(t)$ is the pulse shaping signal. Usually, this pulse is a raised cosine signal satisfying the Nyquist criterion. The value E_s is the energy of the signal assuming that the expected value of $(s_I^2 + s_Q^2)$ is equal to one. The received signal will be

$$\hat{x}(t) = \hat{s}(t) \otimes \hat{h}(t)$$

$$= \sqrt{E_s}a(s_I + js_Q)[g(0) - bg(\tau)\cos(w_0\tau) - jbg(\tau)\sin(w_0\tau)] \tag{5.38}$$

Collecting the real and imaginary parts together, taking into consideration that $g(0) = 1$, $\hat{x}(t)$ simplifies to

$$\begin{aligned}\hat{x}(t) = \sqrt{E_s}\{a[s_I(1 - b\ g(\tau)\cos(w_0\tau) + s_Q bg(\tau)\sin(w_0\tau)] \\ + ja[s_Q(1 - b\ g(\tau)\cos(w_0\tau) - s_I bg(\tau)\sin(w_0\tau)]\}\end{aligned} \tag{5.39}$$

To get $E[\hat{x}^2(t)]$, the value of $\hat{x}^2(t)$ is written as

$$\hat{x}^2(t) = \sqrt{E_s}a^2(s_I^2 + s_Q^2)(1 + b^2g^2(\tau) - 2bg(\tau)\cos(w_0\tau)) \tag{5.40}$$

So, the expected value of $\hat{x}^2(t)$ for constant a,b,f_0, and τ is obtained by getting the average of the amplitude of the signal in the signal space constellation. This means that

$$E[\hat{x}(t)] = E_s a^2(1 + b^2g^2(\tau) - 2bg(\tau)\cos(w_0\tau)) \tag{5.41}$$

The SNR is defined to be the ratio of the signal power to the noise power at the receiver front end [50]; i.e.,

$$\text{SNR} = 10\log\frac{E[\hat{x}^2(t)]R_s}{2\sigma^2 B} \tag{5.42}$$

where σ^2 represents the variance of noise in each dimension, R_s is the symbol rate, and B is the bandwidth required for the tansmission. The last quantity can be rephrased as

$$\text{SNR} = 10\log\frac{E_s a^2(1+b^2g^2(\tau)-2bg(\tau)\cos(2\pi f_0\tau))R_s}{N_0 B} \qquad (5.43)$$

Note that B has been taken as the minimum double-sided bandwidth required to transmit the signal at a symbol rate of R_s.

The carrier recovery is assumed to be perfect throughout the simulation; i.e., the receiver sampling instants were adjusted to the maximum eye opening point. This can be done using square law envelope detection or any other method [35].

The sampled signal is passed to the equalizer. A linear 5-taps transversal equalizer is used throughout the simulation for equalized systems. The 5-tap system is a standard in digital microwave systems. The equalizer receives a complex signal through the I and Q channels and has 5 complex tap gains as described in chapter two. The tap gains are adapted to a fixed faded channel response. The optimum taps are found using the least mean square algorithm. Therefore, for any set of channel parameters the optimum tap gains are found. Finding the optimum gains is done by training the equalizer till the minimum is reached. To ensure this, 10000 symbols were used for the training period and the step size was chosen to be 0.01. This value satisfies the upper bound for the choice of the step size [45]. The equalizer was found to be converging to the minimum with the previous paramters. The use of other schemes of equalizers (e. g., FSE) can improve the performance. However, this is achieved at the expense of having more system complexity.

5.4 Simulation Study Objectives

In digital signaling over frequency-selective fading channels, equalizers are used to combat the effects of ISI. It has been shown [5] that TCM alone can not be regarded as a fading countermeasure especially in frequency-selective fading environments. In the study of the different systems presented here, the use of TCM with an outer code is investigated. The following issues are treated :

- Can the use of a simple TCM scheme and an outer code counteract the effects of fading?
- Will the use of an outer code result in a reduction in outage?
- Is the coding gain for the outer code over AWGN channels degrade or improve if the channel is also experiencing dispersive fading?

5.5 Simulation Results

To answer the previous issues three systems are simulated. The first system, consists of an outer RM(1,3) code and TCM (4 to 8 PSK). However, no equalization was used. In the second system, the outer code is taken out but equalization is used prior to decoding. In the third system, all the three techniques (outer code, TCM and equalization) are assumed. The decoding algorithm for the inner code was based on the Viterbi algorithm with a truncated path of length equal to 18 symbols. This length is more than the minimum length needed (4 to 5 times the constraint length) to achieve almost all the performance with infinite path. The outer code involves hard decision decoding using standard array (syndrome) decoding. The channel model used is very slow compared to the data rate [50]. So, for a very long bit stream the

channel can be considered as a determinstic channel; i.e., the channel variation is very slow compared to the data rate so that it is almost constant over a bit stream of the order of 100 Mb/s which allows for accurate probability of error calculations during the transmission of that bit stream. To compare the three systems, three different stationary fade characteristics were used :

1. Centerband notch with $B = 10$ dB.
2. 4 MHz off-Center notch with $B = 8.5$ dB.
3. 8 MHz off-Center notch with $B = 7$ dB.

Where B stands for the relative notch depth in dB. It is equal to $-20\log(1-b)$. Centerband notch means that $f_0 = 0$ MHz, while the value of $f_0 = 4$ MHz means 4 MHZ off-center notch.

The system symbol rate is 17.5 MHZ which gives a double-sided bandwidth of 22.75 MHZ ($\rho = 3$). The probability of bit error curves vs. SNR were obtained for the three systems. Also, the system signature curves are shown to indicate the imrovement in outage. From figures 5.5, 5.6, and 5.7 it is clear that a large difference in dB gain (around 6 dB) is seen between the system that uses RM and TCM codes with no equalization and the system that uses TCM alone with an equalizer. This means that the combination of an outer code with a TCM alone can not be regarded as a fading countermeasure; i.e., adaptive equalization has to be used in systems with a frequency-selective fading channel.

Another comparison is conducted between the equalized systems alone. It can be said that with the use of an equalizer and a TCM, the outer code reduces the outage time as seen from the signature curves in figure 5.8, and the coding gain of the outer code is at least as that obtained over a channel with AWGN only.

5.6 Summary

In this chapter, the use of transversal equalizers is compared with the use of a TCM encoder/modulator with an outer block code. The channel model used is the simplified three path model given by Rummler [50]. This model represents a slow frequency selective fading channel. It is shown that the use of equalizers is necessay even if the system is using concatenated codes. Also, the use of outer codes for equalized system will result in a performance enhancement similar to the coding gain over AWGN channels.

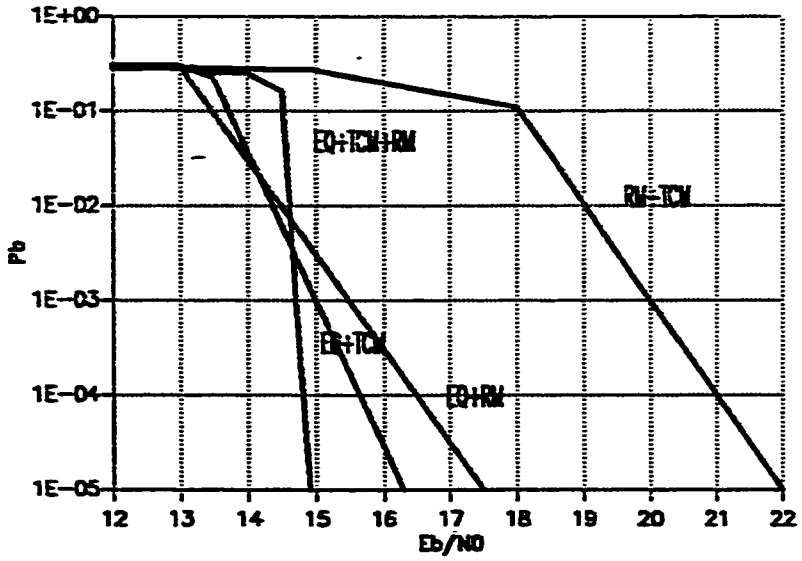

Figure 5.5: Centerband notch with $B = 10$ dB.

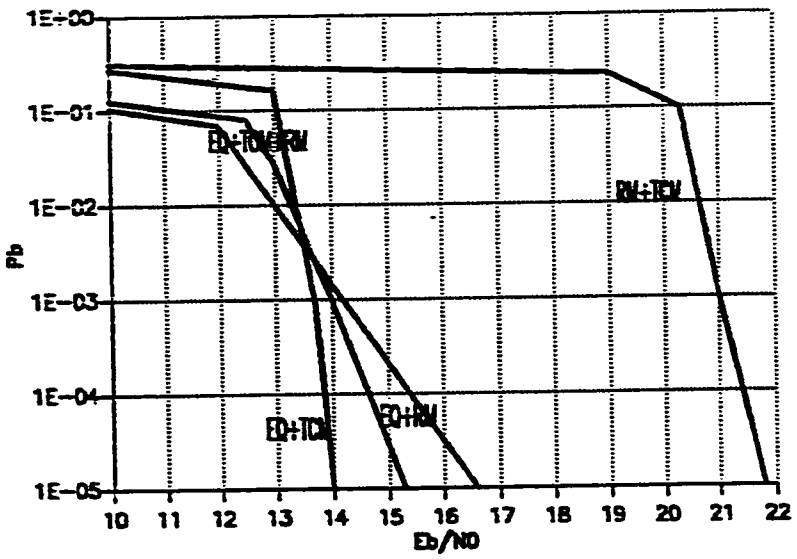

Figure 5.6: 4 MHZ off-Center notch with $B = 8.5$ dB.

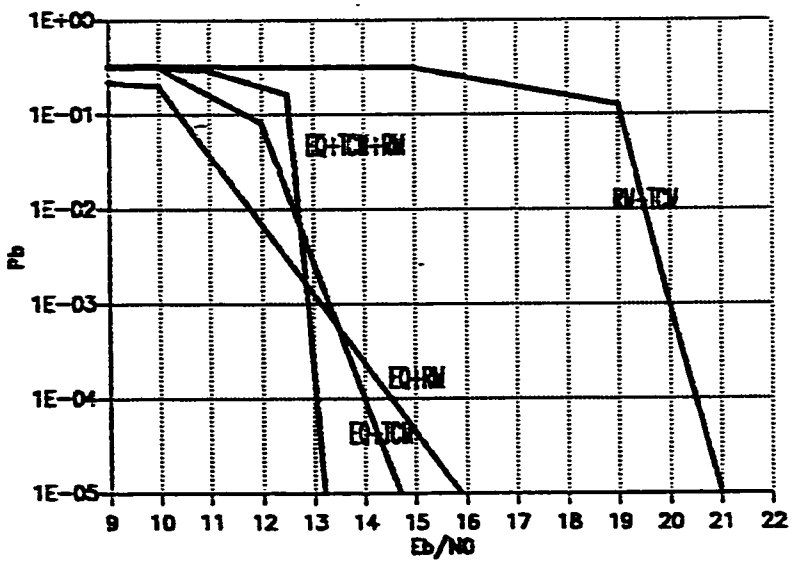

Figure 5.7: 8 MHZ off-Center notch with $B = 7$ dB.

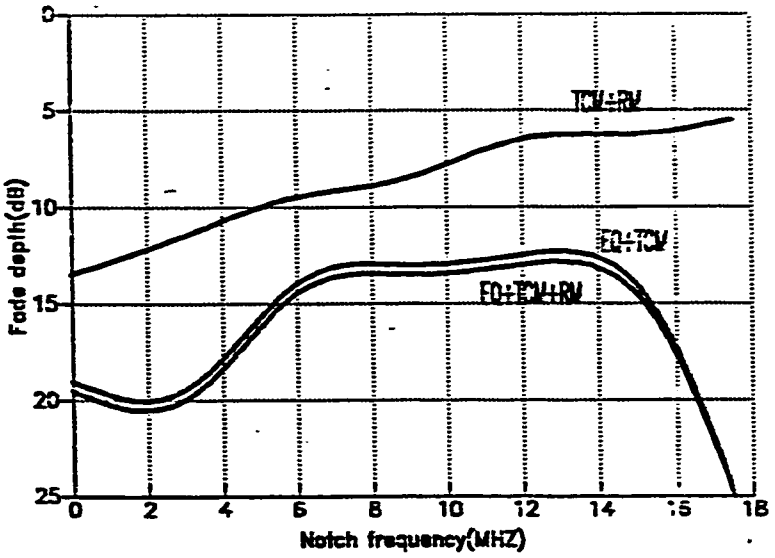

Figure 5.8: Signature curves for BER=10^{-3}

CHAPTER SIX

CONCLUSION AND FUTURE WORK

6.1 Conclusion

From the previous work it is clear that the use of coding in systems experiencing frquency non-selective fading effects is very important because the coding gain achieved is much more than what is achieved over nonfading channels. It is clear that the use of an RM(1,3) code alone can operate the system at $\frac{E_b}{N_0} = 25.5$ dB with a P_b as low as 10^{-5}. With the use of TCM as an inner code, additional improvement can be achieved. The total coding gain can be around 30 dB. TCM offers no bandwidth expansion which makes it more attractive to be used.

One way of comparing the performance of digital communication systems is to take systems having the same data rate. For example, to compare systems with a bandwidth efficiency equal to 1 bit/sec/Hz, the binary system that uses QPSK signaling with the 4-state TCM

discussed in chapter four can be compared with the quarternary system that uses the 8-state TCM (8-PSK) and an outer RM(1,3) or Golay (23,12) codes. This comparison is shown in figure 6.1 where it appears that the use of the outer code gives at least 6 dB coding gain (at $P_b = 10^{-5}$) for the two codes considered here.

In the case of signaling over frequency selective fading it is clear that coding alone can not counteract the effects of residual ISI and some other schemes, such as adaptive equalization or space diversity, have to be used along with coding. However, marginal performance improvement can be obtained with the use of coding for equalized systems. In this case, coding is minimizing the effects of imperfect equalization. The use of coding and diversity has to be investigated.

6.2 Future Work

Future work should investigate the effect of using different outer codes, such as Reed-Solomon codes, on the performance. Also, the use of outer codes that utilize side information should be investigated since it has the potential of additional coding gain.

Moreover, optimization of the design of TCM systems over fading channels can be considered. Based on this, the resulting TCM system with outer codes can be evaluated in the same manner.

The effect of carrier-phase-noise on the performance of trellis codes is another area of research that can be exposed. Also, the use of differential encoding techniques can be studies.

Different channel models can be assumed for the analysis of TCM with outer codes. For example, Rician distributed fading channels can be assumed. The system performance is expected to be better than that when the Rayleigh model is assumed. The effect of coding over

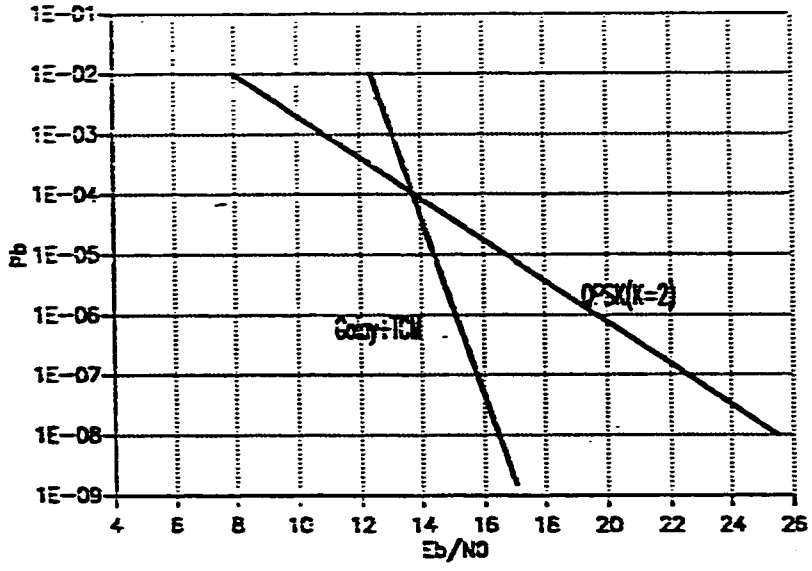

Figure 6.1: Comparison of systems with bandwidth efficiency of 1 bit/sec/Hz

fast fading channels can also be studied. Finally, all the channel models mentioned above fall under the class of Gaussian channels. However, other non-Gaussian channel models can be assumed.

Appendix A
The MMSE Criteria [45]

Least mean squares (LMS) criteria for tap gains update of equalizers is very commonly used in high speed modems. This critetia is explained shortly. Let $d(i)$, $y(k)$ and $z(i)$ denote the transmitted, received and equalized real-valued symbols, respectively. Then,

$$z(i) = \sum_{k=0}^{N-1} c(k)y(i-k) \tag{1}$$

and the error signal is defined as

$$e(i) = d(i) - \sum_{k=0}^{N-1} c(k)y(i-k) \tag{2}$$

The expected value of this error signal is

$$\epsilon = E[(d(i) - \sum_{k=0}^{N-1} c(k)y(i-k))^2] \tag{3}$$

where $\{c(k)\}$ is a set of the equalizer coefficients. The MMSE criteria is based on minimizing the quantity ϵ which can be expressed in a simplified notation by defining

$$E[d^2(i)] = R_d(0) \tag{4}$$

$$E[d(i)y(i-k)] = R_{dy}(k) \tag{5}$$

$$E[y(k)y(j)] = R_y(k-j) \tag{6}$$

Let $\underline{R}_{dy}$ represents the following column vector

$$\underline{R}_{dy} = \begin{bmatrix} R_{dy}(0) \\ R_{dy}(1) \\ \cdot \\ \cdot \\ \cdot \\ R_{dy}(N-1) \end{bmatrix} \tag{7}$$

and define the vector of coefficients

$$\underline{C} = \begin{bmatrix} c(0) \\ c(1) \\ \cdot \\ \cdot \\ \cdot \\ c(N-1) \end{bmatrix} \tag{8}$$

and the correlation matrix

$$R_y = \begin{bmatrix} R_y(0) & R_y(1) & \cdots & R_y(N-1) \\ R_y(1) & R_y(0) & \cdots & R_y(N-2) \\ \cdot & & & \\ \cdot & & & \\ \cdot & & & \\ R_y(N-1) & R_y(N-2) & \cdots & R_y(0) \end{bmatrix} \tag{9}$$

Now, ε can be expressed using matrix notation as

$$\varepsilon = R_d(0) - 2\underline{C}^T \underline{R_{dy}} + \underline{C}^T R_y \underline{C} \tag{10}$$

It is clear that ε is a quadratic function of the coefficients and it can be viewed as an N-dimensional paraboloid with a bottom. Finding the minimum of the paraboloid can be done using the gradient method. Therefore, an iterative method can be used and the tap gains are updated in a direction opposite to the gradient (or its estimate) of the MSE; i.e.,

$$\underline{C}(i+1) = \underline{C}(i) - \frac{1}{2}\alpha \underline{\nabla}(i) \tag{11}$$

where

$$\underline{\nabla}(i) = \frac{\partial \varepsilon}{\partial \underline{C}}\Big|_{\underline{C}=\underline{C}(i)} = \left[\frac{\partial \varepsilon}{\partial c(0)} \quad \cdots \quad \frac{\partial \varepsilon}{\partial c(N-1)} \right]^T \tag{12}$$

and α is the positive adaptation constant or sometimes called the step size. To get an expression for ∇, ε is differentiated with respect to $\underline{C}$; i.e.,

$$\frac{\partial \varepsilon}{\partial \underline{C}} = \frac{\partial}{\partial \underline{C}} E[e^2(i)] = 2E[e(i)\frac{\partial e(i)}{\partial \underline{C}}] \tag{13}$$

$$= 2E[e(i)\frac{\partial}{\partial \underline{C}(i)}(d(i) - \underline{C}^T \underline{Y})] \tag{14}$$

where

$$\underline{Y} = \begin{bmatrix} y(i) \\ y(i-1) \\ \cdot \\ \cdot \\ \cdot \\ y(i-N+1) \end{bmatrix} \tag{15}$$

Therfore,

$$\frac{\partial \varepsilon}{\partial \underline{C}} = -2E[e(i)\underline{Y}] \tag{16}$$

and the update of the tap gains will be according to

$$\underline{C}(i+1) = \underline{C}(i) + \alpha E[e(i)\underline{Y}] \tag{17}$$

The problem here is how to find $E[e(i)\underline{Y}]$. However, an unbiased estimator is used to estimate the previous quantity. This estimator is the value of the product $e(i)\underline{Y}$. The use of such an estimator leads to what is called the least mean squares (LMS) criteria which defines the tap gains update as follow

$$\underline{C}(i+1) = \underline{C}(i) + \alpha e(i)\underline{Y} \tag{18}$$

In other words, each coefficient is updated according to

$$c_k(i+1) = c_k(i) + \alpha e(i) y(i-k) \tag{19}$$

On the other hand, $d(i)$, $y(i)$ and $z(i)$ will be complex-valued sequences in MPSK or QAM systems and they represent the complex envelope of each signal. The error signal is defined to be the square of the difference between the transmitted in-phase component and the equalized in-phase component plus the square of the difference

between the transmitted quadrature component and the equalized quadrature component. Similarly, the LMS criterion will be stated as follows

$$c_k(i+1) = c_k(i) + \alpha e(i) y^*(i-k) \tag{20}$$

where y^* is the complex conjugate of y and c_k will be complex valued. The resulting equalizer will consist of a set of four real transversal filters, cross-coupled, with two inputs representing the complex envelope of the received signal and two outputs representing the complex envelope of the equalized signal. The real coefficients of c_k will reduce the effects of ISI in the in-phase and quadrature channels. The imaginary coefficients will combat the cross interference between the two channels. The equalized signal can be represented in one single equation with complex sequences as follows

$$z(i) = \sum_{k=0}^{N-1} c(k) y(i-k) \tag{21}$$

So, for each component

$$z_I(i) = \sum_{k=0}^{N-1} c_{re}(k) y_{re}(i-k) - \sum_{k=0}^{N-1} c_{im}(k) y_{im}(i-k) = Y_{re}^T C_{re} - Y_{im} C_{im} \tag{22}$$

and

$$z_Q(i) = \sum_{k=0}^{N-1} c_{re}(k) y_{im}(i-k) + \sum_{k=0}^{N-1} c_{im}(k) y_{re}(i-k) = Y_{im}^T C_{re} + Y_{re} c_{im} \tag{23}$$

Appendix B

Upper Bound evaluation for 8-PSK

In the case of a four-state 8-PSK encoder where the previous four-state encoder for QPSK signaling is used, the most significant bit is uncoded so that its transmission determines the half-plane in the signal space. The encoder of this system is shown in figure 4.6.

$$P_b \leq \frac{1}{2b} \frac{\partial T(D_1, ..., D_{M/2}, I)}{\partial I}\Big|_{I=1, D_m = Z_m, m=1,...,\frac{M}{2}} \tag{1}$$

where

$$Z_m = \frac{1}{1 + \frac{bE_b(1-\cos\theta_m)}{2N_0}} \tag{2}$$

and

$$\theta_m = \frac{2m\pi}{M} \tag{3}$$

and D_i denotes the Hamming distance (of value $=i$) of the sequence of output bits corresponding to each branch from the sequence of output bits corresponding to the all-zero branch. I is associated with every branch transition caused by the input bit 1. T is the generating function [9].

The generating function is first expressed as

$$\begin{aligned} T(D_1, D_2, I) &= \frac{D_1 D_2^2 I}{1 - 2D_1 I} \\ k = 1, n = 2, M &= 4 \end{aligned} \tag{4}$$

So, the derivative of T with respect to I can be evaluated as

$$\frac{\partial T(D_1, D_2, I)}{\partial I} = \frac{D_1 D_2^2}{(1 - 2D_1 I)^2} \tag{5}$$

and the values of Z_1 and Z_2 are

$$Z_1 = \frac{1}{1 + \frac{\sqrt{2}E_b}{2N_0}} \qquad Z_2 = \frac{1}{1 + \frac{E_b}{2N_0}} \tag{6}$$

where $E[\alpha^2]$ is made eual to one. Therefore, the bit probability of error can be upper bounded as

$$P_b \leq \frac{1}{2}\left[\frac{\left(\frac{1}{1+\frac{\sqrt{2}E_b}{2N_0}}\right)\left(\frac{1}{1+\frac{E_c}{2N_c}}\right)^2}{\left(1-2\left(\frac{1}{1+\frac{\sqrt{2}E_b}{2N_c}}\right)\right)^2}\right] \tag{7}$$

Appendix C
Sample Program

```
*****************************************************************
THIS COM. SYS. HAS THE FOLLOWING SPECIFICATIONS : *
(1)THE PN SEQUENCEGENERATES RANDOM BITS "0"'S AND "1"'S *
(2)EACH 4 BITS ARE ENCODED INTO 8 BIT CODEWORD ACCORDING TO *
RM(1,3) (8.4)CODE. *
(3)TRELLIS ENCODING OF 4-PSK TO 8-PSK IS DONE ON EACH TWO *
BITS OF THE 8 BITS .GIVING 4 SYMBOLS/CODEWORD. CODING IS *
DONE USING A HALF-PLANE GRAY ENCODED WHERE TWO BITS ARE *
MAPPED TO THREE BITS . THE FIRST BIT GENERATES TWO BITS *
U1=B1+S1+S2 U2=B1+S2 U3=B2 *
(4) EQUALIZATION IS ALSO USED
*****************************************************************
*****************************************************************
DEFINTION OF VARIABLES *
PMTRC(0:3):CONTAINS THE BRACH METRIC COMPUTER FOR EACH STATE *
*****************************************************************
ED(0:7): CONTAINS THE ED VALUE BETWEEN THE RECEIVED SYMBOL ***
*****************************************************************
PSTATE(0:3,1:18):TWO-DIMENSIONAL ARRAY THAT CONTAINS THE PATH*
INFORMATION FOR EACH STATE. THE PATH MEMORY IS 16. *
PSTATE(I,J), INTEGER VALUE, INDICATES THAT A BRANCH OCCURED *
FROM STATE (PSTATE(I,J)) TO STATE I AT TIME FROM J-1 TO J *
POSSIBLE VALUES ARE 0,1,2,3 *
*****************************************************************
MLSEQ1(0:3,1:18):THIS INDICATES THE ML SEQUENCE OF BIT ONE *
IN GOING FROM STATE (PSTATE(I,J)) AT TIME J-1 TO STATE I AT *
TIME J . *
*****************************************************************
MLSEQ2(0:3,1:18):THIS INDICATES THE ML SEQUENCE OF BIT TWO *
IN GOING FROM STATE (PSTATE(I,J)) AT TIME J-1 TO STATE I AT *
TIME J . *
*****************************************************************
*****************************************************************
INTEGER PSTATE(0:3,1:18),MLSEQ1(0:3,1:18),MLSEQ2(0:3,1:18),
TEMP,LOWER,LOOP
REAL PN(23),UNCSYM(2).STATE(2),SYMBOL(3),PMTRC(0:3),ED(0:7),
STRM(30).DBIT1,DBIT2.CDWORD(8),T1,ERPAT(0:15,8),H(4,8),SYN(4),
NC,NS,COUNTB,PE,SNR.SCALE,A,B,F0,PI,TAU,N0,R,CHI,CHQ,CHI1,CHQ1,BC
,ALPHA,R1,R2,R3,CHI2.CHQ2,CHI3,CHQ3
COMPLEX WVFORM(0:7).TXWVFM,RXWVFM,Z,ERROR,C(0:4),D(-4:5),Y(-4:5)
*****************************************************************
**** ALPHA IS THE STEP SIZE OF THE UPDATE CRITERIA OF THE EQ.
**** E IS THE ERROR MAGNITUDE OF THE COMPLEX ERROR SIGNAL
*****************************************************************
LOOP=2
```

```
ITR=1250
ALPHA=0.01
SNR=30.
N0=2
A=1.
**********
BC=18.5
B=1.-10.**(-BC/20.)
F0=6000000.
**********
TAU=6.31*10.**(-9.)
PI=3.141592654
RHO=.3
FS=17.5*10**(6.)
DEMO=PI*TAU*FS*(1-(2.*RHO*TAU*FS)**2.)
R=SIN(PI*TAU*FS)*COS(RHO*PI*TAU*FS)/DEMO
DEMO=PI*(1.+TAU*FS)*(1.-(2.*RHO*(1.+TAU*FS))**2.)
R1=SIN(PI*(2.+TAU*FS))*COS(RHO*PI*(2.+TAU*FS))/DEMO
DEMO=PI*(2.+TAU*FS)*(1.-(2.*RHO*(2.+TAU*FS))**2.)
R2=SIN(PI*(2.+TAU*FS))*COS(RHO*PI*(2.+TAU*FS))/DEMO
DEMO=PI*(3.+TAU*FS)*(1.-(2.*RHO*(3.+TAU*FS))**2.)
R3=SIN(PI*(3.+TAU*FS))*COS(RHO*PI*(3.+TAU*FS))/DEMO
C PRINT*,'NYQUIST',R1,R2,R3,R4
SCALE=1.0
WVFORM(0)=SCALE*(1.,0.)
WVFORM(1)=SCALE*(.707,.707)
WVFORM(3)=SCALE*(0.,1.)
WVFORM(2)=SCALE*(-.707,.707)
WVFORM(4)=SCALE*(-1.,0.)
WVFORM(5)=SCALE*(-.707,-.707)
WVFORM(6)=SCALE*(.707,-.707)
WVFORM(7)=SCALE*(0.,-1.)
CHI=1.-B*R*COS(2.*PI*F0*TAU)
CHQ=-B*R*SIN(2.*PI*F0*TAU)
CHI1=-B*R1*COS(2.*PI*F0*TAU)
CHQ1=-B*R1*SIN(2.*PI*F0*TAU)
CHI2=-B*R2*COS(2.*PI*F0*TAU)
CHQ2=-B*R2*SIN(2.*PI*F0*TAU)
CHI3=-B*R3*COS(2.*PI*F0*TAU)
CHQ3=-B*R3*SIN(2.*PI*F0*TAU)
**********
**** READING THE PARITY CHECK MATRIX OF THE RMCODE **********
DO 101 I =1,4
101 READ(2,*) (H(I,J),J=1,8)
C PRINT*,(H(I,J),J=1,8)
**********
**** READING THE ERROR PATTERN VECTORS OF THE RMCODE **********
```

```
DO 202 I=0,15
202 READ(3,*) (ERPAT(I,J).J=1,8)
C PRINT*, (ERPAT(I,J),J=1.8)
*************************************************************************
INITIALIZE THE FLIP FLOPS OF THE CONVOLUTIONAL ENCODER *
*************************************************************************
DO 303 I=1,2
STATE(I)=0.
303 CONTINUE
*************************************************************************
************ INITIALIZATION OF THE PN SEQUENCE ********************
THE PN SEQUENCE IS GENERATED FROM THE V32 SCRAMBLER WITH THE *
GPC= 1 + X**(-18) + X**(-23) *
*************************************************************************
TO INITIALIZE THE CONTENTS OF THE LFSR , 24 RANDOM NUMBERS *
(EITHER 0 OR 1) ARE READ FROM AN EXTERNAL DATA FILE CALLED *
RANNUM DATA A1 *
*************************************************************************
DO 404 I=1,23
READ(1,*) PN(I)
C PRINT*,PN(I)
404 CONTINUE
*************************************************************************
**** CDWORD CONTAINS 8 BITS . THE FIRST FOUR OF THESE 8 BITS WILL *
**** COME FROM THE STREAM OF DATA WHILE THE OTHER FOUR WILL BE *

**** THEIR CHEK BITS DETERMINED FROM THE RM CODE ( OR EXTENDED *
**** HAMMING (8,4) CODE *
*************************************************************************
**** TRAIN THE EQUALIZER *
*************************************************************************
DO 1 I=1,4
CDWORD(I)=PN(23)
CALL SCRAM(PN)
CALL SCRAM(PN)
1 CONTINUE
CALL SCRAM(PN)
CALL RMENC(CDWORD)
CALL SCRAM(PN)
DO 3 K=0,3
CALL SCRAM(PN)
DO 2 I=1,2
CALL SCRAM(PN)
UNCSYM(I)=CDWORD(I+2*K)
CALL SCRAM(PN)
2 CONTINUE
CALL TRLIS(UNCSYM,STATE,SYMBOL)
L=SYMBOL(3)*4+SYMBOL(2)*2+SYMBOL(I)*1
```

```
TXWVFM=WVFORM(L)
RXWVFM=TXWVFM*CMPLX(CHI,CHQ)
Y(3-K)=RXWVFM
D(3-K)=TXWVFM
3 CONTINUE
DO 1111 I=1,4
CDWORD(I)=PN(23)
CALL SCRAM(PN)
1111 CONTINUE
CALL RMENC(CDWORD)
DO 3333 K=0,3
DO 2222 I=1,2
UNCSYM(I)=CDWORD(I+2*K)
2222 CONTINUE
CALL TRLIS(UNCSYM,STATE,SYMBOL)
L=SYMBOL(3)*4+SYMBOL(2)*2+SYMBOL(I)*1
TXWVFM=WVFORM(L)
RXWVFM=TXWVFM*CMPLX(CHI,CHQ)
Y(-1-K)=RXWVFM
D(-1-K)=RXWVFM
3333 CONTINUE
**********
**** INITIALIZE THE TAP AND REGISTER COEFFICIENTS OF THE EQUALIZER
DO 4 I=0,4
C(I)=CMPLX(0.,0.)
4 CONTINUE
**********
DO 17 IT=0,ITR
DO 5 I=1,4
CDWORD(I)=PN(23)
CALL SCRAM(PN)
5 CONTINUE
CALL RMENC(CDWORD)
**********
DO 7 K=0,3
DO 6 I=1,2
UNCSYM(I)=CDWORD(I+2*K)
6 CONTINUE
CALL TRLIS(UNCSYM,STATE,SYMBOL)
L=SYMBOL(3)*4+SYMBOL(2)*2+SYMBOL(I)*1
TXWVFM=WVFORM(L)
RXWVFM=TXWVFM*CMPLX(CHI,CHQ)
DO 8 IU=3,-4,-1
Y(IU+1)=Y(IU)
D(IU+1)=D(IU)
8 CONTINUE
Y(-4)=RXWVFM
```

```
D(-4)=TXWVFM
**** ADD THE ISI FROM ADJACENT SYMBOLS, TWO BEFORE AND TWO AFTER
Y(0)=D(0)*CMPLX(CHI,CHQ)
Y(0)=Y(0)+D(-1)*CMPLX(CHI1,CHQ1)+D(1)*CMPLX(CHI1,CHQ1)
Y(0)=Y(0)+D(-2)*CMPLX(CHI2,CHQ2)+D(2)*CMPLX(CHI2,CHQ2)
Y(0)=Y(0)+D(-3)*CMPLX(CHI3,CHQ3)+D(3)*CMPLX(CHI3,CHQ3)
**** ADD NOISE TO THE SYSTEM
READ(4,*) NC,NS
SCALE1=(A**2.)*(1+(B*R)**2.-2.*B*R*COS(2.*PI*F0*TAU))
SCALE1=SQRT(N0*(10.**(SNR/10.))/SCALE1)
Y(0)=Y(0)+CMPLX(NC,NS)/SCALE1
************************************
Z=CMPLX(0.,0.)
C DO 18 I=0,4
C PRINT*,C(I)
C18 CONTINUE
DO 9 LM=0,4
Z=Z+C(LM)*Y(LM)
9 CONTINUE
ERROR=D(2)-Z
******* UPDATE THE COEFFICIENTS**********
DO 11 IK=0,4
C(IK)=C(IK)+ALPHA*ERROR*CONJG(Y(IK))
11 CONTINUE
7 CONTINUE
17 CONTINUE
PRINT*, 'TRANSMITTED',D(2)
PRINT*, 'RECEIVED',Y(2)
PRINT*, 'EQUALIZED',Z
C SCALE=(A**2.)*(1+(B*R)**2.-2.*B*R*COS(2.*PI*F0*TAU))
C SCALE=SQRT(N0*(10.**(SNR/10.))/SCALE)
```


1230

```
*****************************************************************
START OF PROCESS(TRANSIENT TIME ONLY) *
FILL THE EQ AND THE VITERBI DECODER BY ENCODING 48 BITS INTO *
24 SYMBOLS. THEN, ENTER THE SYMBOLS TO THE VITERBI DECODER. *
SO, 4 CODEWORDS ARE NEEDED FOR THE TRANSIENT TIME.
*****************************************************************
REINITIALIZE THE FLIP FLOPS OF THE CONVOLUTIONAL ENCODER *
*****************************************************************
DO 313 I=1,2
STATE(I)=0.
313 CONTINUE
*****************************************************************
**** ENCODE BITS IN D(-4:-1) AND Y(-4:-1)
DO 20 I=1,4
CDWORD(I)=PN(23)
CALL SCRAM(PN)
20 CONTINUE
**** GET THE CHECK BITS*********************************************
CALL RMENC(CDWORD)
**** STORE THE DATA BITS ONLY***************************************
DO 25 M=1,4
25 STRM(M)=CDWORD(M)
**** TRELLIS ENCODE BITS 1 AND 2 ***********************************
DO 35 I=1,2
UNCSYM(I)=CDWORD(I)
35 CONTINUE
CALL TRLIS(UNCSYM,STATE,SYMBOL)
L=SYMBOL(3)*4 +SYMBOL(2)*2 +SYMBOL(1)*1
TXWVFM=WVFORM(L)
**** INTRODUCE ERRORS HERE ***************
RXWVFM=TXWVFM*CMPLX(CHI,CHQ)
**** EQUALIZATION ***************
DO 36 I=4,-4,-1
Y(I+1)=Y(I)
D(I+1)=D(I)
36 CONTINUE
Y(-4)=RXWVFM
D(-4)=TXWVFM
**** ADD THE ISI FROM ADJACENT SYMBOLS, THREE BEFORE AND THREE
AFTER
Y(0)=D(0)*CMPLX(CHI,CHQ)
Y(0)=Y(0)+D(-1)*CMPLX(CHI1,CHQ1)+D(1)*CMPLX(CHI1,CHQ1)
Y(0)=Y(0)+D(-2)*CMPLX(CHI2,CHQ2)+D(2)*CMPLX(CHI2,CHQ2)
Y(0)=Y(0)+D(-3)*CMPLX(CHI3,CHQ3)+D(3)*CMPLX(CHI3,CHQ3)
**** ADD NOISE TO THE SYSTEM
READ(4,*) NC,NS
Y(0)=Y(0)+CMPLX(NC,NS)/SCALE1
**** TRELLIS ENCODE BITS 3 AND 4 *************
```

```
DO 45 I=1,2
UNCSYM(I)=CDWORD(I+2)
45 CONTINUE
CALL TRLIS(UNCSYM,STATE,SYMBOL)
L=SYMBOL(3)*4 +SYMBOL(2)*2 +SYMBOL(1)*1
TXWVFM=WVFORM(L)
**** INTRODUCE ERRORS HERE ***************
RXWVFM=TXWVFM*CMPLX(CHI,CHQ)
**** EQUALIZATION ****************
DO 46 I=4,-4,-1
Y(I+1)=Y(I)
D(I+1)=D(I)
46 CONTINUE
Y(-4)=RXWVFM
D(-4)=TXWVFM
**** ADD THE ISI FROM ADJACENT SYMBOLS, THREE BEFORE AND THREE
AFTER
Y(0)=D(0)*CMPLX(CHI,CHQ)
Y(0)=Y(0)+D(-1)*CMPLX(CHI1,CHQ1)+D(1)*CMPLX(CHI1,CHQ1)
Y(0)=Y(0)+D(-2)*CMPLX(CHI2,CHQ2)+D(2)*CMPLX(CHI2,CHQ2)
Y(0)=Y(0)+D(-3)*CMPLX(CHI3,CHQ3)+D(3)*CMPLX(CHI3,CHQ3)
**** ADD NOISE TO THE SYSTEM
READ(4,*) NC,NS
Y(0)=Y(0)+CMPLX(NC,NS)/SCALE1
**** TRELLIS ENCODE BITS 5 AND 6 *******
DO 55 I=1,2
UNCSYM(I)=CDWORD(I+4)
55 CONTINUE
CALL TRLIS(UNCSYM,STATE,SYMBOL)
L=SYMBOL(3)*4 +SYMBOL(2)*2 +SYMBOL(1)*1
TXWVFM=WVFORM(L)
RXWVFM=TXWVFM*CMPLX(CHI,CHQ)
**** EQUALIZATION ****************
DO 56 I=4,-4,-1
Y(I+1)=Y(I)
D(I+1)=D(I)
56 CONTINUE
Y(-4)=RXWVFM
D(-4)=TXWVFM
**** ADD THE ISI FROM ADJACENT SYMBOLS, THREE BEFORE AND THREE
AFTER
Y(0)=D(0)*CMPLX(CHI,CHQ)
Y(0)=Y(0)+D(-1)*CMPLX(CHI1,CHQ1)+D(1)*CMPLX(CHI1,CHQ1)
Y(0)=Y(0)+D(-2)*CMPLX(CHI2,CHQ2)+D(2)*CMPLX(CHI2,CHQ2)
Y(0)=Y(0)+D(-3)*CMPLX(CHI3,CHQ3)+D(3)*CMPLX(CHI3,CHQ3)
**** ADD NOISE TO THE SYSTEM
READ(4,*) NC,NS
Y(0)=Y(0)+CMPLX(NC,NS)/SCALE1
```

```
C Y(0)=Y(0)+CMPLX(NC,NS)
**** TRELLIS ENCODE BITS 7 AND 8 ***********
DO 65 I=1,2
UNCSYM(I)=CDWORD(I+6)
65 CONTINUE
CALL TRLIS(UNCSYM,STATE,SYMBOL)
L=SYMBOL(3)*4 +SYMBOL(2)*2 +SYMBOL(1)*1
TXWVFM=WVFORM(L)
RXWVFM=TXWVFM*CMPLX(CHI,CHQ)
**** EQUALIZATION ***************
DO 66 I=4,-4,-1
Y(I+1)=Y(I)
D(I+1)=D(I)
66 CONTINUE
Y(-4)=RXWVFM
D(-4)=TXWVFM
**** ADD THE ISI FROM ADJACENT SYMBOLS, THREE BEFORE AND THREE
AFTER
Y(0)=D(0)*CMPLX(CHI,CHQ)
Y(0)=Y(0)+D(-1)*CMPLX(CHI1,CHQ1)+D(1)*CMPLX(CHI1,CHQ1)
Y(0)=Y(0)+D(-2)*CMPLX(CHI2,CHQ2)+D(2)*CMPLX(CHI2,CHQ2)
Y(0)=Y(0)+D(-3)*CMPLX(CHI3,CHQ3)+D(3)*CMPLX(CHI3,CHQ3)
**** ADD NOISE TO THE SYSTEM
READ(4,*) NC,NS
Y(0)=Y(0)+CMPLX(NC,NS)/SCALE1
C Y(0)=Y(0)+CMPLX(NC,NS)
DO 67 I=1,4
CDWORD(I)=PN(23)
CALL SCRAM(PN)
67 CONTINUE
**** GET THE CHECK BITS**********************************************
CALL RMENC(CDWORD)
**** STORE THE DATA BITS ONLY****************************************
DO 68 M=1,4
68 STRM(4+M)=CDWORD(M)
**** TRELLIS ENCODE BITS 1 AND 2 ************************************
DO 69 I=1,2
UNCSYM(I)=CDWORD(I)
69 CONTINUE
CALL TRLIS(UNCSYM,STATE,SYMBOL)
L=SYMBOL(3)*4 +SYMBOL(2)*2 +SYMBOL(1)*1
TXWVFM=WVFORM(L)
**** INTRODUCE ERRORS HERE ***************
RXWVFM=TXWVFM*CMPLX(CHI,CHQ)
**** EQUALIZATION ***************
DO 71 I=4,-4,-1
Y(I+1)=Y(I)
D(I+1)=D(I)
```

```
71 CONTINUE
Y(-4)=RXWVFM
D(-4)=TXWVFM
**** ADD THE ISI FROM ADJACENT SYMBOLS, THREE BEFORE AND THREE
AFTER
Y(0)=D(0)*CMPLX(CHI,CHQ)
Y(0)=Y(0)-D(-1)*CMPLX(CHI1,CHQ1)+D(1)*CMPLX(CHI1,CHQ1)
Y(0)=Y(0)-D(-2)*CMPLX(CHI2,CHQ2)+D(2)*CMPLX(CHI2,CHQ2)
Y(0)=Y(0)-D(-3)*CMPLX(CHI3,CHQ3)+D(3)*CMPLX(CHI3,CHQ3)
**** ADD NOISE TO THE SYSTEM
READ(4,*) NC,NS
Y(0)=Y(0)-CMPLX(NC,NS)/SCALE1
C Y(0)=Y(0)+CMPLX(NC,NS)
**** TRELLIS ENCODE BITS 3 AND 4 **************
DO 73 I=1,2
UNCSYM(I)=CDWORD(I+2)
73 CONTINUE
CALL TRLIS(UNCSYM,STATE,SYMBOL)
L=SYMBOL(3)*4 +SYMBOL(2)*2 +SYMBOL(1)*1
TXWVFM=WVFORM(L)
**** INTRODUCE ERRORS HERE ***************
RXWVFM=TXWVFM*CMPLX(CHI,CHQ)
**** EQUALIZATION *****************
DO 75 I=4,-4,-1
Y(I+1)=Y(I)
D(I+1)=D(I)
75 CONTINUE
Y(-4)=RXWVFM
D(-4)=TXWVFM
**** ADD THE ISI FROM ADJACENT SYMBOLS, THREE BEFORE AND THREE
AFTER
Y(0)=D(0)*CMPLX(CHI,CHQ)
Y(0)=Y(0)-D(-1)*CMPLX(CHI1,CHQ1)+D(1)*CMPLX(CHI1,CHQ1)
Y(0)=Y(0)-D(-2)*CMPLX(CHI2,CHQ2)+D(2)*CMPLX(CHI2,CHQ2)
Y(0)=Y(0)-D(-3)*CMPLX(CHI3,CHQ3)+D(3)*CMPLX(CHI3,CHQ3)
**** ADD NOISE TO THE SYSTEM
READ(4,*) NC,NS
Y(0)=Y(0)-CMPLX(NC,NS)/SCALE1
**** TRELLIS ENCODE BITS 5 AND 6 ********
DO 77 I=1,2
UNCSYM(I)=CDWORD(I+4)
77 CONTINUE
CALL TRLIS(UNCSYM,STATE,SYMBOL)
L=SYMBOL(3)*4 +SYMBOL(2)*2 +SYMBOL(1)*1
TXWVFM=WVFORM(L)
RXWVFM=TXWVFM*CMPLX(CHI,CHQ)
**** EQUALIZATION *****************
DO 79 I=4,-4,-1
```

```
Y(I+1)=Y(I)
D(I+1)=D(I)
79 CONTINUE
Y(-4)=RXWVFM
D(-4)=TXWVFM
**** ADD THE ISI FROM ADJACENT SYMBOLS, THREE BEFORE AND THREE
AFTER
Y(0)=D(0)*CMPLX(CHI,CHQ)
Y(0)=Y(0)+D(-1)*CMPLX(CHI1,CHQ1)+D(1)*CMPLX(CHI1,CHQ1)
Y(0)=Y(0)+D(-2)*CMPLX(CHI2,CHQ2)+D(2)*CMPLX(CHI2,CHQ2)
Y(0)=Y(0)+D(-3)*CMPLX(CHI3,CHQ3)+D(3)*CMPLX(CHI3,CHQ3)
**** ADD NOISE TO THE SYSTEM
READ(4,*) NC,NS
Y(0)=Y(0)+CMPLX(NC,NS)/SCALE1
C Y(0)=Y(0)+CMPLX(NC,NS)
**** FIND THE EQUALIZED SIGNAL ******************
Z=CMPLX(0.,0.)
DO 81 LM=0,4
Z=Z+C(LM)*Y(LM)
81 CONTINUE
RXWVFM=Z
**** START FILLING THE VITERBI DEOCDER MEMORY **********
DO 83 I=0,7,1
83 ED(I)=CABS(RXWVFM-WVFORM(I))
CALL ACS1(ED,PMTRC,MLSEQ1,MLSEQ2,PSTATE)
**** TRELLIS ENCODE BITS 7 AND 8 **********
DO 85 I=1,2
UNCSYM(I)=CDWORD(I+6)
85 CONTINUE
CALL TRLIS(UNCSYM,STATE,SYMBOL)
L=SYMBOL(3)*4 +SYMBOL(2)*2 +SYMBOL(1)*1
L=SYMBOL(3)*4 +SYMBOL(2)*2 +SYMBOL(1)*1
TXWVFM=WVFORM(L)
RXWVFM=TXWVFM*CMPLX(CHI,CHQ)
**** EQUALIZATION ****************
DO 87 I=4,-4,-1
Y(I+1)=Y(I)
D(I+1)=D(I)
87 CONTINUE
Y(-4)=RXWVFM
D(-4)=TXWVFM
**** ADD THE ISI FROM ADJACENT SYMBOLS, THREE BEFORE AND THREE
AFTER
Y(0)=D(0)*CMPLX(CHI,CHQ)
Y(0)=Y(0)+D(-1)*CMPLX(CHI1,CHQ1)+D(1)*CMPLX(CHI1,CHQ1)
Y(0)=Y(0)+D(-2)*CMPLX(CHI2,CHQ2)+D(2)*CMPLX(CHI2,CHQ2)
Y(0)=Y(0)+D(-3)*CMPLX(CHI3,CHQ3)+D(3)*CMPLX(CHI3,CHQ3)
**** ADD NOISE TO THE SYSTEM
```

```
READ(4,*) NC,NS
Y(0)=Y(0)+CMPLX(NC,NS)/SCALE1
C Y(0)=Y(0)+CMPLX(NC,NS)
***** FIND THE EQUALIZED SIGNAL ******************
Z=CMPLX(0.,0.)
DO 89 LM=0,4
Z=Z+C(LM)*Y(LM)
89 CONTINUE
RXWVFM=Z
***** FILLING THE VITERBI DEOCDER MEMORY (SECOND SYMBOL) **********
DO 91 I=0,7,1
91 ED(I)=CABS(RXWVFM-WVFORM(I))
CALL ACS2(ED,PMTRC,MLSEQ1,MLSEQ2,PSTATE)
*****************************************************************
***** COMPLETING THE REST OF TRANSIENT TIME(COMPLETE FILLING)******
```

```
*****************************************************************
***** LT REPRESENTS THE ENCODING OF 16 DATA BITS TO 32 BITS=4 CODE-
WORDS
DO 80 LT=1,4
***** TAKE 4 BITS AT RANDOM
DO 84 I=1,4
CDWORD(I)= PN(23)
CALL SCRAM(PN)
84 CONTINUE
*****************************************************************
***** DETERMINING THE CHECK BITS FROM THE DATA BITS BY CALLING THE**

***** SUBROUTINE RMENC(CDWORD) THAT WILL TAKE A ONE-DIMENSIONAL
****
***** 8 ELEMENT ARRAY WHERE THE FIRST FOUR BITS ARE THE DATA BITS
**
***** AND THE THE LAST FOUR BITS ARE THE CHECK BITS TO BE *********
***** DETERMINED FROM THE SUBROUTINE ****************************
*****************************************************************
CALL RMENC(CDWORD)
***** STORE THE DATA BITS ONLY (FOR COMPARISON WITH THE DEOCDED
BITS)
DO 90 M=1,4
90 STRM(4+M+4*LT)=CDWORD(M)
*****************************************************************
GET TWO DATA BITS *
*****************************************************************
DO 95 K=0,3
DO 96 I=1,2
UNCSYM(I)=CDWORD(I+2*K)
96 CONTINUE
*****************************************************************
ENCODE THE TWO BITS INTO THREE BITS = ONE OF 8 SYMBOLS *
ENCODING IS DONE USING A 4 STATE CONVOLUTIONAL ENCODER *
*****************************************************************
CALL TRLIS(UNCSYM,STATE,SYMBOL)
*****************************************************************
SIGNAL MAPPING *
*****************************************************************
L=SYMBOL(3)*4+SYMBOL(2)*2+SYMBOL(1)*1
TXWVFM=WVFORM(L)
*****************************************************************
INTRODUCE ERRORS HERE *
*****************************************************************
C READ(4,*) NC,NS
RXWVFM=TXWVFM*CMPLX(CHI,CHQ)
```

```
C RXWVFM=RXWVFM+CMPLX(NC,NS)
*****************************************************************
**** EQUALIZATION PART *
DO 98 I=4,-4,-1
Y(I+1)=Y(I)
D(I+1)=D(I)
98 CONTINUE
Y(-4)=RXWVFM
D(-4)=TXWVFM
**** ADD THE ISI FROM ADJACENT SYMBOLS, THREE BEFORE AND THREE
AFTER
Y(0)=D(0)*CMPLX(CHI,CHQ)
Y(0)=Y(0)+D(-1)*CMPLX(CHI1,CHQ1)+D(1)*CMPLX(CHI1,CHQ1)
Y(0)=Y(0)+D(-2)*CMPLX(CHI2,CHQ2)+D(2)*CMPLX(CHI2,CHQ2)
Y(0)=Y(0)+D(-3)*CMPLX(CHI3,CHQ3)+D(3)*CMPLX(CHI3,CHQ3)
**** ADD NOISE TO THE SYSTEM
READ(4,*) NC,NS
Y(0)=Y(0)+CMPLX(NC,NS)/SCALE1
C Y(0)=Y(0)+CMPLX(NC,NS)
**** FIND THE EQUALIZED SIGNAL ********************
Z=CMPLX(0.,0.)
DO 99 LM=0,4
Z=Z+C(LM)*Y(LM)
99 CONTINUE
RXWVFM=Z
*****************************************************************
DECODING PART *
ALGORITHM:(FIRST THE METRIC ARRAY HAS TO BE INITIALIZED *
(1) RECEIVE THE WAVEFORM AND FIND THE ED BETWEEN THE RX'D *
WAVEFORM AND ALL OTHER WAVEFORMS. *
*****************************************************************
DO 100 I=0,7,1
100 ED(I)=CABS(RXWVFM-WVFORM(I))
*****************************************************************
(2) ADD - COMPARE - SELECT OPERATION *
*****************************************************************
J=4*(LT-1)+K+3
CALL ACS(ED,PMTRC,MLSEQ1,MLSEQ2,PSTATE,J)
95 CONTINUE
80 CONTINUE
*****************************************************************
END OF TRANSIENT *
START OF CONTINOUS DATA TRANSMISSION AND DECODING *
*****************************************************************
**** COUNTER; COUNTB:NO. OF BITS IN ERROR
COUNTB=0.0
DO 2000 ITER=1,LOOP
**** TAKE 4 BITS AT RANDOM
```

```
DO 150 I=1,4
CDWORD(I)= PN(23)
CALL SCRAM(PN)
150 CONTINUE
**** STORE THE DATA BITS ONLY (FOR COMPARISON WITH THE DEOCDED
BITS)
DO 155 J=1,4
155 STRM(J+24)=CDWORD(J)
*****************************************************************
**** DETERMINING THE CHECK BITS FROM THE DATA BITS BY CALLING THE**

**** SUBROUTINE RMENC(CDWORD) THAT WILL TAKE A ONE-DIMENSIONAL
****
**** 8 ELEMENT ARRAY WHERE THE FIRST FOUR BITS ARE THE DATA BITS
**
**** AND THE THE LAST FOUR BITS ARE THE CHECK BITS TO BE *********
**** DETERMINED FROM THE SUBROUTINE ******************************
*****************************************************************
CALL RMENC(CDWORD)
*****************************************************************
**** LOCAL LOOP FOR TRANSMISSION OF ONE CODEWORD
DO 1500 LO=0,3
DO 160 I=1,2
UNCSYM(I)=CDWORD(I+2*LO)
160 CONTINUE
CALL TRLIS(UNCSYM,STATE,SYMBOL)
*****************************************************************
SIGNAL MAPPING *
*****************************************************************
L=SYMBOL(3)*4+SYMBOL(2)*2+SYMBOL(1)*1
TXWVFM=WVFORM(L)
C READ(4,*) NC,NS
RXWVFM=TXWVFM*CMPLX(CHI,CHQ)
C RXWVFM=TXWVFM*CHANL+CMPLX(NC,NS)
*****************************************************************
**** EQUALIZATION PART *****
DO 198 I=4,-4,-1
Y(I+1)=Y(I)
D(I+1)=D(I)
198 CONTINUE
Y(-4)=RXWVFM
D(-4)=TXWVFM
**** ADD THE ISI FROM ADJACENT SYMBOLS, THREE BEFORE AND THREE
AFTER
Y(0)=D(0)*CMPLX(CHI,CHQ)
Y(0)=Y(0)+D(-1)*CMPLX(CHI1.CHQ1)+D(1)*CMPLX(CHI1,CHQ1)
Y(0)=Y(0)+D(-2)*CMPLX(CHI2.CHQ2)+D(2)*CMPLX(CHI2,CHQ2)
```

```
Y(0)=Y(0)+D(-3)*CMPLX(CHI3,CHQ3)+D(3)*CMPLX(CHI3,CHQ3)
***** ADD NOISE TO THE SYSTEM
READ(4,*) NC,NS
Y(0)=Y(0)+CMPLX(NC,NS)/SCALE1
C Y(0)=Y(0)+CMPLX(NC,NS)
***** FIND THE EQUALIZED SIGNAL ********************
Z=CMPLX(0.,0.)
DO 199 LM=0,4
Z=Z+C(LM)*Y(LM)
199 CONTINUE
RXWVFM=Z
*****************************************************************
DECODING PART *
INNER CODE *
ALGORITHM: *
(1) DECIDING ON THE TRANSMITTED PAIR OF BITS BEFORE 18 SYMBOL *
INTERVALS. *
*****************************************************************
TEMP=LOWER(PMTRC)
***** REDUCE ALL PATH METRICS BY A CONSTANT
DO 105 I=0,3
105 PMTRC(I)=PMTRC(I)-PMTRC(TEMP)
***** TRACEBACK
DO 110 I=18,2,-1
TEMP=PSTATE(TEMP,I)
110 CONTINUE
***** FIND THE DECODED BITS
DBIT1=MLSEQ1(TEMP,1)
DBIT2=MLSEQ2(TEMP,1)
*****************************************************************
(1) RECEIVE THE WAVEFORM AND FIND THE ED BETWEEN THE RX'D *
WAVEFORM AND ALL OTHER WAVEFORMS. *
*****************************************************************
DO 141 I=0,7,1
141 ED(I)=CABS(RXWVFM-WVFORM(I))
*****************************************************************
(2) PATH MEMORY UPDATE *
*****************************************************************
DO 120 L=1,17
DO 130 I=0,3
MLSEQ1(I,L)=MLSEQ1(I,L+1)
MLSEQ2(I,L)=MLSEQ2(I,L+1)
PSTATE(I,L)=PSTATE(I,L+1)
130 CONTINUE
120 CONTINUE
*****************************************************************
(3) ADD - COMPARE - SELECT OPERATION *
*****************************************************************
```

```
CALL ACS(ED,PMTRC,MLSEQ1,MLSEQ2,PSTATE,18)
*****************************************************************
CDWORD(1+2*LO)=DBIT1
CDWORD(2+2*LO)=DBIT2
1500 CONTINUE
*****************************************************************
****************** DECODING PART ******************************
OUTER CODE *
***** FIRST , THE RECEIVED CODEWORD IS MULTIPLIED BY THE TRANSPOSE
*
***** OF THE PARITY CHECK MATRIX READ FROM THE DATA FILE (PARITY).
*
***** THIS WILL RESULT INTO THE SYNDROME STORED INTO ARRAY SYN *****
***** MULTIPLICATION IS DONE BY CALLING THE SYBROUTINE SYNDROME******

***** THAT WILL TAKE THE CODEWORD AND WILL GIVE THE SYNDROME *******

*****************************************************************
CALL SYNDRM(CDWORD,H,SYN)
C22 FORMAT(' ',2X,4I3)
*****************************************************************
***** NOW THE SYNDROME IS USED TO LOCATE THE ERROR PATTERN VEC-
TOR **
*****************************************************************
T1=SYN(1)*8+SYN(2)*4+SYN(3)*2+SYN(4)
*****************************************************************
***** CORRECTION NOW OCCURS;I.E.,THE CODEWORD IS NOW MULTIPLIED
*****
***** BY THE ERROR PATTERN VECTOR *************************************
*****************************************************************
DO 170 J=1,8
170 CDWORD(J)=XOR(CDWORD(J),ERPAT(I,J))
*****************************************************************
***** GENERATE A REPORT
***** FINDING HOW MANY BITS ARE IN ERROR
DO 280 IC=1,4
IF(CDWORD(IC).NE.STRM(IC)) COUNTB=COUNTB+1.0
280 CONTINUE
***** UPDATING THE BIT STREAM
DO 290 IP=1,24
290 STRM(IP)=STRM(IP+4)
C IF(COUNTB.GE.100) GOTO 3000
2000 CONTINUE
ITER=ITER-1
3000 PRINT*,'NO. OF ERRORS',COUNTB
PRINT*,'IN A BIT STREAM OF LENGTH',ITER*4
PE=COUNTB/REAL(ITER*4)
PRINT*,' PROBABILITY OF ERROR =',PE
```

```
C PRINT*,' AT SNR=',SNR
WRITE(7,*) SNR,PE
END
*****************************************************************
THIS FUNCTION TAKES TWO REAL VARIABLES AND ASSUMES THEY ARE *
EITHER 1 OR 0 . IT RETURNS THE VALUE OF THEIR XOR OPERATION *
IN THE XOR VARIABLE . *
*****************************************************************
REAL FUNCTION XOR(X,Y)
REAL X,Y
IF(X.EQ.Y) THEN
XOR=0.
ELSE
XOR=1.
ENDIF
RETURN
END
*****************************************************************
THIS FUNCTION TAKES THE ED BETWEEN THE RECEIVED *
WAVEFORM AND WAVEFORMS 0,3,4,7 AND RETURNS THE *
INTEGER REPRESENTATION OF THE WAVEFORM(0,3,4,7) *
THAT HAS THE SMALLEST MINIMUM DISTANCE. *
*****************************************************************
INTEGER FUNCTION MIN1(ED)
REAL ED(0:7),MIN
MIN=ED(0)
MIN1=0
IF(MIN.GT.ED(3)) THEN
MIN=ED(3)
MIN1=3
ENDIF
IF(MIN.GT.ED(4)) THEN
MIN=ED(4)
MIN1=4
ENDIF
IF(MIN.GT.ED(7)) THEN
MIN=ED(7)
MIN1=7
ENDIF
RETURN
END
*****************************************************************
THIS FUNCTION TAKES THE ED BETWEEN THE RECEIVED *
WAVEFORM AND WAVEFORMS 1,2,5,6 AND RETURNS THE *
INTEGER REPRESENTATION OF THE WAVEFORM(1,2,5,6) *
THAT HAS THE SMALLEST MINIMUM DISTANCE. *
*****************************************************************
INTEGER FUNCTION MIN2(ED)
```

```
      REAL ED(0:7),MIN
      MIN=ED(1)
      MIN2=1
      IF(MIN.GT.ED(2)) THEN
      MIN=ED(2)
      MIN2=2
      ENDIF
      IF(MIN.GT.ED(5)) THEN
      MIN=ED(5)
      MIN2=5
      ENDIF
      IF(MIN.GT.ED(6)) THEN
      MIN=ED(6)
      MIN2=6
      ENDIF
      RETURN
      END
*************************************************************************
THIS FUNCTION TAKES THE PMTRC (PATH METRIC) 4- ELEMENT ARRAY *
AND FINDS THE ONE WITH THE MINIMUM VALUE OF THEM. IT RETURNS *
THE INDEX OF THE MINIMUM ELEMENT, WHICH REPRESENT THE STATE *
NUMBER (0,1,2,3) . THE RETURNED VALUE IS AN INTEGER STORED *
IN THE FUNCTION VARIABLE ITSELF. *
*************************************************************************
      INTEGER FUNCTION LOWER(PMTRC)
      REAL PMTRC(0:3)
      LOWER=0
      DO 26 I=1,3
      IF(PMTRC(LOWER).GT.PMTRC(I)) THEN
      LOWER=I
      ENDIF
   26 CONTINUE
      RETURN
      END
*************************************************************************
      SUBROUTINE TRLIS(UNCSYM,STATE,SYMBOL)
      EXTERNAL XOR
      REAL UNCSYM(2),STATE(2),SYMBOL(3)
      SYMBOL(3)=UNCSYM(2)
      SYMBOL(2)=XOR(UNCSYM(1),STATE(2))
      SYMBOL(1)=XOR(STATE(1),SYMBOL(2))
      STATE(2)=STATE(1)
      STATE(1)=UNCSYM(1)
      RETURN
```

```
END
*********************************************************************
THIS SUBROUTINE CALCULATES THE NEXT VALUE OF THE SCRAMBLER *
OUTPUT AT LOCATIONS 0 , 18 , AND 23 OF THE LFSR ARE XORED *
TOGETHER AND THE RESULT IS STORED IN REGISTER 0 WHERE THE *
CONTENTS OF REGISTER 0 ARE SHIFTED TO REGISTER ONE *
AND SO ON. *
*********************************************************************
SUBROUTINE SCRAM (PN)
REAL PN(23),TEMPR
TEMPR=XOR(PN(18),PN(23))
DO 500 I=23,2,-1
500 PN(I)=PN(I-1)
PN(1)=TEMPR
RETURN
END
*********************************************************************
THIS SUBROUTINE IS USED ONLY AT THE BEGINING OF *
TRANSMISSION TO INITIALIZE THE VITERBI DECODER. IT *
COMPUTES THE METRIC FOR THE FIRST TWO STATES ONLY. *
*
*********************************************************************
SUBROUTINE ACS1(ED,PMTRC,MLSEQ1,MLSEQ2,PSTATE)
REAL ED(0:7),PMTRC(0:3)
INTEGER MLSEQ1(0:3,1:18),MLSEQ2(0:3,1:18),PSTATE(0:3,1:18)
DO 15 I=0,2,2
PSTATE(I,1)=0
15 MLSEQ1(I,1)=I/2
IF(ED(0).LT.ED(4)) THEN
MLSEQ2(0,1)=0
PMTRC(0)=ED(0)
ELSE
MLSEQ2(0,1)=1
PMTRC(0)=ED(4)
ENDIF
IF(ED(3).LT.ED(7)) THEN
MLSEQ2(2,1)=0
PMTRC(2)=ED(3)
ELSE
MLSEQ2(2,1)=1
PMTRC(2)=ED(7)
ENDIF
RETURN
```

```
END
*****************************************************************
THIS SUBROUTINE IS USED ONLY AT THE 2ND TIME UNIT OF *
TRANSMISSION TO INITIALIZE THE VITERBI DECODER. IT *
COMPUTES THE METRIC FOR THE FIRST TWO STATES ONLY. *
*
*****************************************************************
SUBROUTINE ACS2(ED,PMTRC,MLSEQ1,MLSEQ2,PSTATE)
REAL ED(0:7),PMTRC(0:3),PMTRCO(0:3)
INTEGER MLSEQ1(0:3,1:18),MLSEQ2(0:3,1:18),PSTATE(0:3,1:18),INDEX
DO 25 I=0,2,2
PMTRCO(I)=PMTRC(I)
PSTATE(I,2)=0
25 MLSEQ1(I,2)=I/2
IF(ED(0).LT.ED(4)) THEN
MLSEQ2(0,2)=0
INDEX=PSTATE(0,2)
PMTRC(0)=PMTRCO(INDEX)+ED(0)
ELSE
MLSEQ2(0,2)=1
INDEX=PSTATE(0,2)
PMTRC(0)=PMTRCO(INDEX)+ED(4)
ENDIF
IF(ED(3).LT.ED(7)) THEN
MLSEQ2(2,2)=0
INDEX=PSTATE(2,2)
PMTRC(2)=PMTRCO(INDEX)+ED(3)
ELSE
MLSEQ2(2,2)=1
INDEX=PSTATE(2,2)
PMTRC(0)=PMTRCO(INDEX)+ED(7)
ENDIF
DO 35 I=1,3,2
PSTATE(I,2)=2
35 MLSEQ1(I,2)=I/2
IF(ED(1).LT.ED(5)) THEN
MLSEQ2(1,2)=0
PMTRC(1)=ED(1)
ELSE
MLSEQ2(1,2)=1
PMTRC(1)=ED(5)
ENDIF
IF(ED(2).LT.ED(6)) THEN
MLSEQ2(3,2)=0
PMTRC(3)=ED(2)
ELSE
MLSEQ2(3,2)=1
PMTRC(3)=ED(6)
```

```
ENDIF
RETURN
END
*****************************************************************
THIS SUBROUTINE COMPUTES THE METRIC AT EACH STATE. *
IT ADDS THE METRIC TO THE PREVIOUS VALUE. THIS IS *
DONE AFTER COMPARISON AND SELECTION (ACS) STAGE. *
*****************************************************************
SUBROUTINE ACS(ED,PMTRC,MLSEQ1,MLSEQ2,PSTATE,J)
REAL ED(0:7),PMTRC(0:3),PMTRCO(0:3)
INTEGER MLSEQ1(0:3,1:18),MLSEQ2(0:3,1:18),PSTATE(0:3,1:18),
INDEX,J,MIN11,MIN22
EXTERNAL MIN1,MIN2
********** STATES 0 AND 2 **********
MIN11=MIN1(ED)

   DO 50 I=0,2,2
**** (PREVIOUS STATES ARE "00" OR "01")
PMTRCO(I)=PMTRC(I)
PMTRCO(I+1)=PMTRC(I+1)
IF(MIN11.EQ.0.OR.MIN11.EQ.4) THEN
PSTATE(I,J)=I/2
IF(MIN11.EQ.0) MLSEQ2(I,J)=0
PSTATE(I,J)=I/2
IF(MIN11.EQ.4) MLSEQ2(I,J)=1
IF(I.EQ.0) MLSEQ1(I,J)=0
IF(I.EQ.2) MLSEQ1(I,J)=1
ELSE
PSTATE(I,J)=1-I/2
IF(MIN11.EQ.3) MLSEQ2(I,J)=0
IF(MIN11.EQ.7) MLSEQ2(I,J)=1
IF(I.EQ.0) MLSEQ1(I,J)=0
IF(I.EQ.2) MLSEQ1(I,J)=1
ENDIF
INDEX=PSTATE(I,J)
PMTRC(I)=PMTRCO(INDEX)+ED(MIN11)
50 CONTINUE
********** STATES 1 AND 3 **********
MIN22=MIN2(ED)
DO 60 I=1,3,2
**** (PREVIOUS STATES ARE "10" OR "11")
IF(MIN22.EQ.1.OR.MIN22.EQ.5) THEN
PSTATE(I,J)=I/2 +2
IF(MIN22.EQ.1) MLSEQ2(I,J)=0
IF(MIN22.EQ.5) MLSEQ2(I,J)=1
IF(I.EQ.1) MLSEQ1(I,J)=0
IF(I.EQ.3) MLSEQ1(I,J)=1
ELSE
```

```
PSTATE(I,J)=3-I/2
IF(MIN22.EQ.2) MLSEQ2(I,J)=0
IF(MIN22.EQ.6) MLSEQ2(I,J)=1
IF(I.EQ.1) MLSEQ1(I,J)=0
IF(I.EQ.3) MLSEQ1(I,J)=1
ENDIF
INDEX=PSTATE(I,J)
PMTRC(I)=PMTRCO(INDEX)+ED(MIN22)
60 CONTINUE
RETURN
END
*****************************************************************
**** SUBROUTINE RMENC(CDWORD) WILL TAKE A ONE-DIMENSIONAL *********

**** 8 ELEMENT ARRAY WHERE THE FIRST FOUR BITS ARE THE DATA BITS **
**** SUBROUTINE RMENC(CDWORD) WILL TAKE A ONE-DIMENSIONAL *********

**** AND DETERMINES THE LAST FOUR BITS, THE CHECK BITS . **
**** THE RELATIONS ARE AS FOLLOWS : **
**** R5=R1+R2+R4 **
**** R6=R2+R3+R4 **
**** R7=R1+R2+R3 **
**** R8=R1+R3+R4 **
*****************************************************************
SUBROUTINE RMENC(CDWORD)
REAL CDWORD(8),T1
T1=XOR(CDWORD(1),CDWORD(2))
CDWORD(5)=XOR(T1,CDWORD(4))
T1=XOR(CDWORD(2),CDWORD(3))
CDWORD(6)=XOR(T1,CDWORD(4))
T1=XOR(CDWORD(1),CDWORD(2))
CDWORD(7)=XOR(T1,CDWORD(3))
T1=XOR(CDWORD(1),CDWORD(3))
CDWORD(8)=XOR(T1,CDWORD(4))
RETURN
END
*****************************************************************
**** THIS SUBROUTINE CALCULATES THE SYNDROME OF THE RECEIVED ******

**** CODEWORD BY MULTIPLYING THERECEIVED CODEWORD BY THE TRANS-
POSE*
**** OF THEPARITY CHECK MATRIX. THE FIRST FOUR BITS OF CODEWORD
***
**** ARE THE DATA BITS WHILE THE LAST FOUR BITS ARE THE CHECK BITS*

**** THE RETURNED 4 ELEMENT VECTOR, SYN , SHOULD BE CONVERTED
*****
**** TO A DECIMAL NUMBER TO LOCATE THE ERROR PATTERN VECTOR
```

```
******
**** SYN(1) IS THE MSB AND SYN(4) IS THE LSB ***********************
*************************************************************************
SUBROUTINE SYNDRM(CDWORD,H,SYN)
EXTERNAL XOR
REAL CDWORD(8),SYN(4).H(4,8)
DO 50 I=1,4
SYN(I)=0.
DO 60 J=1,8
T1=CDWORD(J)*H(I,J)
60 SYN(I)=XOR(SYN(I),T1)
50 CONTINUE
RETURN
END
```

References

[1] William T. Barnett. "Multipath Fading Effects on Digital Radio". *IEEE Transactions on Communications*, COM-27(12):1842–1848, December 1979.

[2] Ezio Biglieri et al. *Introduction to Trellis-Coded Modulation with Applications*. Macmillan Publishing Company, 1991.

[3] A. R. Calderbank and N. J. Sloane. "Four - Dimensional Modulation with an Eight-State Trellis Code". *AT & T Technical Journal*, 64(5):1005 – 1018, May - June 1985.

[4] Robert Calderbank and James E. Mazo. "A New Description of Trellis Codes". *IEEE Transactions on Information Theory*. IT-30(6):784–791, November 1984.

[5] Chris J. Carlisle, Mansoor Shafi, and William K. Kennedy. "Trellis-Coded Modulation on Digital Microwave Radio Systems - Simulations for Multipath Fading Channels". *IEEE Transactions On Communications*, 39(4):488 – 495, April 1991.

[6] James K. Cavers and Paul Ho. "Analysis of the Error Performance of Trellis-Coded Modulations in Rayleigh-Fading Channels". *IEEE Transactions on Communications*, 40(1):74–83, January 1992.

[7] J. K. Chamberlain and et al. "Receiver Techniques for Microwave Digital Radio". *IEEE Communications Magazine*. 24(11):43–54, November 1986.

[8] David Chase. "Digital Signal Design Concepts for a Time-Varying Rician Channel". *IEEE Transactions on Communications*, 24(2):164–172, February 1976.

[9] Yuh-Long Chen and Che-Ho Wei. "Performance Evaluation of Convolutional Codes with MPSK on Rician Fading Channels". *IEE Proceedings-F*, 134(2):166–173, April 1987.

[10] A. Chouly and K. Fazel. "Combined Concatenated Coding and Modulation Schemes Using a Redundant Signal Alphabet". In *The International Conference on Communications ICC91*, pages 1085–1089. Denver, 1991.

[11] A. Chouly and H. Sari. "Application of Trellis Coding to Digital Microwave Radio". In *The International Conference on Communications ICC88*, pages 0468–0472, 1988.

[12] Curtis A. Siller, Jr. . "Multipath Propagation". *IEEE Communications Magazine*, 22(2):6 – 15, February 1984.

[13] Yoshimasa Daido, Sadao Takenaka, Eisuki Fukuda, Toshiaki, and Hiroshi Nakamora. "Multilevel QAM Modulation Techniques for Digital Microwave Radios". *IEEE Journal on Selected Areas in Communications*, SAC-5(3):336–341, April 1987.

[14] Robert H. Deng and Daniel J. Costello, JR. "High Rate Concatenated Coding Systems Using Bandwidth Efficient Trellis Inner Codes". *IEEE Transactions on Communications*, 37(5):420–427, May 1989.

[15] M. Despinic, W. K. Kirkland, and D. P. Taylor. "On the Performance of Trellis-Coded Modulation in Digital Microwave Radio". In *The International Conference on Communications ICC89*, pages 1025–1029, 1989.

[16] D. Divsalar and M. K. Simon. "Generalized Multiple Trellis Coded Modulation (MTCM)". 0692–0698, 1987.

[17] Dariush Divsalar and Marvin K. Simon. "The Design of Trellis Coded MPSK for Fading Channels: Performance Criteria". *IEEE Transactions on Communications*. 36(9):1004 – 1012. September 1988.

[18] Dariush Divsalar and Marvin K. Simon. "The Design of Trellis Coded MPSK for Fading Channels: Set Partitioning for Optimum Code Design. *IEEE Transactions on Communications*. 36(9):1013 – 1021, September 1988.

[19] Dariush Divsalar and Marvin K. Simon. "Trellis Coding with Asymmetric Modulations". *IEEE Transactions on Communications*, COM - 35(2):130 – 141. February 1987.

[20] J. Du and B. Vucetic. "New 16-QAM Trellis Codes for Fading Channels". *Electronics Letters*, 27(12):1009–1010, 6th June 1991.

[21] J. Du and B. Vucetic. "New M-PSK Trellis Codes for Fading Channels". *Electronics Letters*, 26(16):1267–1269, 2nd August 1990.

[22] G. D. Forney. "The Viterbi Algorithm". *IEEE Proceedings*, 61:268–278, March 1973.

[23] G. D. Forney et al. "Efficient Modulation for Bandlimited Signals". *IEEE Journal on Selected Areas in Communications*, SAC-2(5):632–647, september 1984.

[24] Jerry D. Gibson. *Principles of Digital and Analog Communications*. Macmillan Publishing Company, 1990.

[25] Halm Goldman. "Mathematical Analysis of the Three-Ray Dispersive Fading Channel Model". *IEE Proceedings-I*, 138(2):87–94, April 1991.

[26] L. J. Greenstein and M. Shafi. "Outage Calculation Methods for Microwave Digital Radio". *IEEE Communications Magazine*, 25(2):30–39, February 1987.

[27] Simon Haykin. *Digital Communications*. John Wiley & Sons, 1988.

[28] Leon W. Couch II. *Digital and Analog Communication Systems*. Macmillan Publishing Company, 1987.

[29] S. Hamidreza Jamali and Tho Le-Ngoc. "A New 4-State 8PSK TCM Scheme for Fast Fading, Shadowed Mobile Radio Channel". *IEEE Transactions on Vehicular Technology*, 40(1):216–222, February 1991.

[30] S. Hamidreza Jamali and Tho Le-Ngoc. "On the Performance of Bandwidth Efficient RS Coded MPSK Signaling over a Rayleigh Fading Channel". In *The International Conference on Communications ICC91*, pages 1090–1094, Denver, 1991.

[31] Edward A. Lee and David G. Messerschmitt. *Digital Communication*. Kluwer Academic Publishers, 1988.

[32] L. C. Lee and P. G. Farrel. "Performance of Phase-Invariant Trellis Coding for Differentially-Encoded Coherent M-PSK Signals on Rayleigh Fading Channels". *Electronic Letters*, 27(12):1051–1052. 6 June 1991.

[33] Harry Leib and Subbarayan Pasupathy. Trellis-Coded Differentially Coherent (TCDC) MPSK with Carrier-Phase-Noise". *IEEE Transactions on Communications*, 39(6):877–886, June 1991.

[34] Shu Lin and Daniel J. Costello. Jr. . *Error Control Coding : Fundamentals and Applications*. Prentice - Hall International , Inc . . 1983.

[35] William C. Lindsey and Marvin K. Simon. *Telecommunication Systems Engineering*. Prentice-Hall, Inc., 1973.

[36] Chia-Liang Liu and Kamilo Feher. "Bit Error Rate Performance of $\phi/4$ - DQPSK in a Frequency-Selective Fast Rayleigh Fading Channel". *IEEE Transactions on Vehicular Technology*, 40(3):558–568, August 1991.

[37] Chun Loo and Norman Secord. "Computer Models for Fading Channels with Applications to Digital Transmission". *IEEE Transactions on Vehicular Technology*, 40(4):700–707, November 1991.

[38] C. W. Lundgren and W. D. Rummler. "Digital Radio Outage Due to Selective Fading - Observation vs. Prediction from Laboratory Simulation". *The Bell System Technical Journal*, 58(5):1073–1103, May-June 1979.

[39] Ross G. McKay, Peter J. McLane, and Ezio Biglieri. "Error Bounds for Trellis-Coded MPSK on a Fading Mobile Satellite Channel". *IEEE Transactions on Communications*, 39(12):1750–1761, December 1991.

[40] Arnold M. Michelson and Allen H. Levesque. *Error - Control Techniques For Digital Communication*. John Wiley & Sons. 1985.

[41] Michael J. Miller and Syed V. Ahamed. *Digital Transmission Systems and Networks*. Computer Science Press, 1987.

[42] Christoff K. Pauw and Donald L. Schilling. "Probability of Error for M-ary PSK and DPSK on a Rayleigh Fading Channel". *IEEE Transactions on Communications*, 36(6):755–756, June 1988.

[43] John Pieper et al. "Design of Efficient Coding and Modulation for a Rayleigh Fading Channel". *IEEE Transcation on Information Theory*, IT-24(4):457–468, July 1978.

[44] Steven S. Pietrobon et al. "Trellis-Coded Multidimensional Phase Modulation". *IEEE Transactions on Information Theory*, 36(1):63 – 89, January 1990.

[45] John G. Proakis. *Digital Communications*. McGraw-Hill International Book Company, 1989.

[46] Shahid Qureshi. "Adaptive Equalization". *IEEE Communications Magazine*, 20:9–16, March 1982.

[47] Theodore S. Rappaport and Victor Fung. "Simulation of Bit Error performance of FSK, BPSK, and $\phi/4$ DQPSK in Flat Fading Indoor Radio Using a Measurement-Based Channel Model". *IEEE Transactions on Vehicular Technology*, 40(4):731–740, November 1991.

[48] W. D. Rummler. "A Simplified Method for the Laboratory Determination of Multipath Outage of Digital Radios in the Presence of Thermal Noise". *IEEE Transactions on Communications*, 30(3):487–494, March 1982.

[49] William D. Rummler. "More on the Multipath Fading Channel Model". *IEEE Transactions on Communications*, COM - 29(3):346 – 352, March 1981.

[50] William D. Rummler. "A New Selective Fading Model". *The Bell System Technical Journal*, 58(5):1037–1071, May-June 1979.

[51] William D. Rummler. "Time- and Frequency-Domain Representation of Multipath Fading on Line-Of-Sight Microwave Paths". *The Bell System Technical Journal*, 59(5):763–796, May-June 1980.

[52] William D. Rummler, R. P. Coutts, and M. Liniger. "Multipath Channel Models for Microwave Digital Radio". *IEEE Communications Magazine*, 24(11):30–42, November 1986.

[53] Mansoor Shafi. "Statistical Analysis/Simulation of a Three Ray Model for Multipath Fading with Applications to Outage Prediction". *IEEE Journal on Selected Areas in Communications*, SAC-5(3):389–401, April 1987.

[54] Marvin K. Simon and Dariush Divsalar. "The Performance of Trellis Coded Multilevel DPSK on a Fading Mobile Satellite Channel". *The International Conference on Communications ICC87*, 732-738, 1987.

[55] Zoran Siveski. *On the Performance of Concatenated Trellis with High-Rate Outer Codes*. PhD thesis, The City University of New York, 1990.

[56] Bernard Sklar. *Digital Communications Fundamentals and Applications*. Prentice-Hall International, Inc., 1988.

[57] David R. Smith. *Digital Transmission Systems*. Van Nostrand Reinhold Company, 1985.

[58] Seymour Stein. "Fading Channel Issues in System Engineering". *IEEE Journal on Selected Areas in Communications*, SAC - 5(2):68 – 89, February 1987.

[59] Szu-Lin Su, Jau-Ming Wu, and Jau-Yien Lee. "A New Combination of Block Coded Modulation and Trellis Coded modulation. In *The International Conference on Communications ICC91*, pages 1080–1084, Denver, 1991.

[60] D. P. Taylor and M. Shafi. "Fade Margin and Outage Computation of 4ϕ-QPRS Radio Employing Decision Feedback Equalization". In *The International Conference on Communications ICC83*, pages F2.1.1–F2.1.6, 1983.

[61] G. Ungerboeck. "Channel Coding with Multilevel Phase Signals". *IEEE Transactions on Information Theory*, IT - 28(1):55–67, January 1982.

[62] G. Ungerboeck. "Trellis Coded Modulation with Redundant Signal Sets: part I: Introduction; part II: State of the Art". *IEEE Communications Magazine*, 25:5 – 21, February 1987.

[63] Scott A. Vanstone and Paul C. van Oorschot. *An Introduction to Error Correcting Codes with Applications*. Kluwer Academic Publishers, 1989.

[64] Andrew Viterbi, Jack K. Wolf, Ephraim Zehavi, and Roberto Padovani. "A Pragmatic Approach to Trellis-Coded Modulation". *IEEE Communications Magazine*, 27(7):11 – 19, July 1989.

[65] Branka Vucetic and Jolian Nicolas. "Construction of M-PSK Trellis Codes and Performance Analysis over Fading Channels". *The International Conference on Communications ICC90*, 614-618",1990

[66] L. F. Wei. "Rotationally Invariant Convolutional Channel Coding with Expanded Signal Space. Part I: 180°". *IEEE Journal on Selected Areas in Communications*, SAC-2(5):659–671, September 1984.

[67] L. F. Wei. "Rotationally Invariant Convolutional Channel Coding with Expanded Signal Space. Part II: Nonlinear Codes". *IEEE Journal on Selected Areas in Communications*, SAC-2(5):672–686, September 1984.

[68] Lee-Fang Wei. "Trellis-Coded Modulation with Multidimensional Constellations". *IEEE Transactions on Information Theory*, IT - 33(4):483 – 501, July 1987.

[69] Stephen G. Wilson and Yiuman S. Leung. "Trellis-Coded Phase Modulation on Rayleigh Channels". *The International Conference on Communications ICC87*, 739-743, 1987.

[70] Jack K. Wolf and Gottfried Ungerboeck. "Trellis Coding for Partial-Response Channels". *IEEE Transactions on Communications*, COM - 34(8):765 – 773, August 1986.

[71] L. N. Wong and P. J. Mclane. "Performance of Trellis Codes for a Class of Equalized ISI Channels". *IEEE Transactions on Communications*, 36(12):1330 – 1336, December 1988.

[72] Ephraim Zehavi and Jack J. Wolf. "On the Performance Evaluation of Trellis Codes". *IEEE Transactions on Information Theory*, IT-33(2):196 – 202, March 1987.