TWO-POINT BOUNDARY VALUE PROBLEMS FOR FIRST ORDER IMPULSIVE DIFFERENTIAL EQUATIONS

BY

ALI SAEED AL-QAHTANI

A Thesis Presented to the

DEANSHIP OF GRADUATE STUDIES

KING FAHD UNIVERSITY OF PETROLEUM & MINERALS

Dhahran, Saudi Arabia

In Partial Fulfillment of the Requirements
For the degree of

MASTER OF SCIENCE
in
MATHEMATICS

May 2004

KING FAHD UNIVERSITY OF PETROLEUM & MINERALS
Dhahran 31261, Saudi Arabia

DEANSHIP OF GRADUATE STUDIES

This thesis, written by **ALI SAEED AL-TALHAN AL-QAHTANI** under the direction of his thesis advisor and approved by his thesis committee, has been presented to and accepted by the Dean of Graduate Studies, in partial fulfillment of the requirements for the degree of **MASTER OF SCIENCE IN MATHEMATICS**.

Thesis Committee

Dr. Abdelkader Boucherif, Thesis Advisor

Dr. Haydar Akca, Member

Dr. Salim Messaoudi, Member

Department Chairman
Dr. Khaled Furati

Dean Of Graduate Studies
Prof. Osama Jannadi

Date

الإهداء

أهدي هذا العمل

إلى والدي الكريمين ... ثمرة من ثمار تربيتهما وغرسهما

إلى إخوتي وأخواتي ... ردا لبعض معروفهم وإحسانهم

إلى زوجتي العزيزة ... وفاءًا لها ولصبرها وتضحيتها

إلى أبنائي وبناتي أمل المستقبل ... حافزا لهم على العلم والعمل

DEDICATION

I wish to dedicate this thesis to my parents,
my brothers, my sisters, my wife, my kids and my friends

ACKNOWLEDGMENT

All praise be to Allah, Lord of the world, the Almighty, with whose gracious help it was possible to accomplish this task.

Acknowledgment is due to the King Fahd University of Petroleum & Minerals for supporting this research.

I wish to express my appreciation to Dr. Abdelkader Boucherif who served as my major advisor. Without him this work would not have been accomplished. I also wish to thank the other members of my thesis committee Dr. Haydar Akca and Dr. Salim Messaoudi.

I extend my thanks to my parents, my brothers, my sisters and my wife.

Contents

DEDICATION iii

ACKNOWLEDGMENT iv

LIST OF FIGURES vii

THESIS ABSTRACT viii

ARABIC ABSTRACT ix

1 Introduction 1

2 Preliminaries 4

2.1 Banach Spaces ……... 4

2.2 Fixed Point Theorems ……. 7

2.3 Function Spaces ……. 8

2.4 Lipschitz Continuity ……. 9

2.5 Topological Transversality Theorem ……. 9

2.6 Impulsive Differential Equations …….. 12

2.6.1 Classification of IDEs …….. 12

2.6.2 Properties of Solutions of IDEs ……..… 14

2.6.3 Linear Impulsive Systems …… 16

2.6.4 Nonlinear Impulsive Systems ……... 18

2.7 Caratheodory Function ……..……... 19

3 Motivating Examples **20**

4 Review of Recent Works **31**

5 Nonlinear Problems **34**

5.1 Linear Problem ……..……... 34

5.2 Nonlinear Problem ……...……. 38

5.3 Periodic Boundary Problem ……..…… 51

Bibliography **57**

Vita

List of Figures

3.1 A ball that is jumping on a flat horizontal surface **27**

3.2 A body *M* attached by a spring to a fixed point **28**

3.3 Verge and foliot escapement mechanism **29**

THESIS ABSTRACT

FULL NAME OF STUDENT	:	ALI SAEED AL-QAHTANI
TITLE OF STUDY	:	Two-point Boundary Value Problems For First Order Impulsive Differential Equations
MAJOR FIELD	:	MATHEMATICAL SCIENCES
DATE OF DEGREE	:	MAY 2004

Impulsive Differential Equations arise naturally in the description of physical systems that are subjected to sudden changes in their states. Most often the dynamics take place during a finite time interval. This leads to the study of boundary value problems for Impulsive Differential Equations. In this thesis, we consider two-point boundary value problems for first order Impulsive Differential Equations. We state sufficient conditions on the data in order to obtain the existence of a least one solution. Our technique of proofs relies on fixed point theorems and topological transversality theorem.

ملخص الرســـالة

الاســـــــــم : علي بن سعيد بن سالم آل طلحان القحطاني

عنوان الرسالة : مسائل القيم الحدودية ذات النقطتين للمعادلات التفاضلية الدفعية من الرتبة الأولى

التخصـــــص : : رياضيات

تاريخ التخـرج : ربيع الثاني 1425هـ - مايو 2004

المعادلات التفاضلية الدفعيّة (المتقطعة) ظهرت عند دراسة كثير من التطبيقات الفيزيائية التي يطرأ عليها تغير مفاجئ. في الغالب أن مثل هذه التطبيقات تحدث في فترة زمنية محدودة. من هنا تتبين أهمية دراسة مسائل القيم الحدوديّة للمعادلات التفاضلية الدفعيّة. في هذه الرسالة تمت دراسة مسائل القيم الحدوديّة ذات النقطتين للمعادلات التفاضلية الدفعيّة غير الخطية من الرتبة الأولى. حيث قمنا بوضع شروط كافية على البيانات الإبتدائية لإثبات وجود حل على الأقل للمسألة موضع الدراسة. اعتمدنا في اثبات هذه النتائج على نظريات النقطة الثابتة وكذلك نظرية التوبولوجيا المستعرضة.

Chapter 1

Introduction

Many processes studied in applied sciences are represented by differential equations. However, the situation is quite different in many physical phenomena that have a sudden change in their states such as mechanical systems with impact, biological systems such as heart beats, blood flows, population dynamics, theoretical physics, radiophysics, pharmacokinetics, mathematical economy, chemical technology, electric technology, metallurgy, ecology, industrial robotics, biotechnology, medicine and so on. Adequate mathematical models of such processes are systems of differential equations with impulses. The theory of impulsive differential equations is a new and important branch of differential equations. The first papers in this theory are related to the names of A. D. Mishkis and V. D. Milman in 1960 and 1963. The last decades have seen major developments in this theory. In spite of its importance, the development of the theory has been quite slow due to special features possessed by impulsive differential equations in general, such as pulse phenomena, confluence, and loss of autonomy (see for instance, [11]).

An impulsive differential equation is described by three components:

a continuous-time differential equation, which governs the state of the system between impulses; an impulse equation, which models an impulsive jump defined by a jump function at the instant an impulse occurs; and a jump criterion, which defines a set of jump events in which the impulse equation is active (see [32]). Mathematically this equation takes the form

$$\begin{aligned} x'(t) &= f(t,x) \quad , \quad t \neq \tau_k \quad , \; t \in J \quad , \\ \Delta x(\tau_k) &= \varphi_k(x(\tau_k)) \quad , \; k = 1,2,...,m \; , \end{aligned} \tag{1.1}$$

where J is any real interval, $f : J \times \mathbb{R}^n \to \mathbb{R}^n$ is a given function, $\varphi_k : \mathbb{R}^n \to \mathbb{R}^n$, $k = 1,2,...,m$ and $\Delta x(\tau_k) = x(\tau_k^+) - x(\tau_k^-)$, $k = 1,2,...,m$. The numbers τ_k are called instants (or moments) of impulse, φ_k represents the jump of the state at each τ_k, $x(\tau_k^+)$ and $x(\tau_k^-)$ represent the right limit and left limit, respectively, of the state at $t = \tau_k$. Notice that the moments of impulse may be fixed or may depend on the state of the system. In our study we will be concerned with fixed moments only.

Often, the process takes place over a finite time interval. This leads to the study of one of the important problems of the modern theory of impulsive differential, namely boundary value problems, the boundary conditions being specified at the ends of the interval. More specifically, let $T > 0$, $J = [0,T]$, $0 = \tau_0 < \tau_1 < ... < \tau_{m+1} = T$, $J' = J \backslash \{\tau_1, ..., \tau_m\}$ and consider the impulsive problem (1.1) with the boundary condition

$$B(x) = 0, \tag{1.2}$$

where B is a boundary operator.

In our work we will consider two-point boundary value problems of the form

$$\begin{aligned} x'(t) = A(t)x(t) + F(t, x(t)) \quad , \quad t \neq \tau_k \quad , \ t \in [0,1] \quad , \\ \Delta x(\tau_k) = \varphi_k(x(\tau_k)) \quad , \quad k = 1, 2, ..., m \quad , \\ Mx(0) + Nx(1) = c \quad , \end{aligned} \tag{1.3}$$

where $A(\cdot)$ is a continuous $n \times n$ matrix, $F : [0,1] \times \mathbb{R}^n \to \mathbb{R}^n$ is an L^1-Caratheodory function; M and N are $n \times n$ constant matrices.

Our aim is to prove existence of solutions of problem (1.3). We shall provide sufficient conditions on the data, $A(\cdot)$, F, φ_k, M, and N in equation (1.3) in order to obtain a priori bounds on solutions. We then rely on the topological transversality theory to prove existence of solutions.

This thesis includes four chapters. In the first chapter, we recall some basic definitions and properties of solutions of impulsive differential equations. Also, we present important facts about the topological transversality theory. In the second chapter, we gather several motivating examples from different real world problems. In the third chapter we take the task of reviewing some quite recent works on two-point boundary value problems for impulsive differential equations. Finally, in chapter four we study our problem, we state and prove our main results.

Chapter 2

Preliminaries

In this chapter, we present some of the main concepts and some results which are useful for our study. For more details one may refer to the following [27], [13].

2.1 Banach Spaces

Definition 1

A normed space X is a vector space with a norm defined on it. A norm on a vector space X is a real valued function on X whose value at an $x \in X$ is denoted by $\|x\|$ and which has the properties

1. $\|x\| \geq 0$, $\|x\| = 0$ if and only if $x = 0$,
2. $\|\alpha\ x\| = |\alpha| \cdot \|x\|$,
3. $\|x + y\| \leq \|x\| + \|y\|$,

where x and y are arbitrary vectors in X and α is any scalar. The normed space just defined is denoted by $(X, \|\cdot\|)$ or simply by X.

Definition 2

A sequence $\{x_n\}$ in a normed linear space X is a Cauchy sequence if for every $\epsilon > 0$ there is an $N(\epsilon) > 0$ such that $\|x_n - x_m\| < \epsilon$ whenever $n, m > N(\epsilon)$.

Definition 3

The space X is complete if every Cauchy sequence in X converges to an element of X.

Definition 4

A complete normed linear space is called a Banach space.

Examples

Let $J = [0, 1]$. Then the following spaces are Banach spaces.

1. $C([0, 1]; \mathbb{R})$ or $C(J)$ is the space of continuous real-valued functions y on J with the norm $\|y\|_0 = \max\{|y(t)|\,; \quad t \in J\}$.

2. For $k = 1, 2, ...,$ $C^k([0, 1]; \mathbb{R})$ or $C^k(J)$ is the space of real-valued functions that are k-times continuously differentiable on J with the norm

   $\|y\|_k = \max\{\|y\|_0\,; \|y'\|_0\,, \|y''\|_0\,, ..., \left\|y^{(k)}\right\|_0\}$.

3. $L^1([0,1];\mathbb{R})$ is the space of integrable functions on J with the usual norm

$$\|y\| = \int_J |y(t)|\, dt \ .$$

4. $L^p([0,1];\mathbb{R})$ or $L^p(J) = \{y : J \to \mathbb{R}$ measurable; $\int_J |y(t)|^p\, dt < \infty\ \}$ and for $y \in L^p(J)$ the norm is

$$\|y\| = \left(\int_J |y(t)|^p\, dt \right)^{\frac{1}{p}}$$

5. $AC([0,1];\mathbb{R})$ is the space of all absolutely continuous real-valued functions $y : J \to \mathbb{R}$, with $\|y\| = \sup\{|y(t)|\,;\ \ t \in J\}$.

6. $AC^1([0,1];\mathbb{R})$ is the space of real-valued functions which are absolutely continuous, with their first derivatives on J. For $y \in AC^1([0,1];\mathbb{R})$ the norm is

$$\|y\| = \sup\{|y(t)| + |y'(t)|\,;\ \ t \in J\}$$

Theorem 1

A subspace Y of a Banach space X is complete if and only if the set Y is closed in X.

Definition 5

Let X and Y be Banach spaces. $f : X \to Y$ is called a linear mapping if

$$f(a_1x_1 + a_2x_2) = a_1f(x_1) + a_2f(x_2)$$

for all $x_1,\ x_2 \in X$ and $a_1,\ a_2 \in \mathbb{R}$.

Theorem 2

Suppose X, Y are Banach spaces. A linear mapping $f : X \to Y$ is bounded if and only if it is continuous.

2.2 Fixed Point Theorems

Definition 6

A fixed point of a transformation $F : X \to X$ is a point $x \in X$ such that $Fx = x$.

Definition 7

If $\Re$ is a subset of a Banach space X and F is a transformation, $F : \Re \to B$ (Banach space), then F is a contraction on $\Re$ if there is a $K,\ 0 \leq K < 1$, such that $\|Fx - Fy\| \leq K \|x - y\|$, $x,\ y \in \Re$. K is called the contraction constant for F on $\Re$.

Theorem 3 *(Banach contraction theorem)*

If $\Re$ is a closed subset of a Banach space X and $T : \Re \to \Re$ is a contraction on $\Re$, then T has a unique fixed point x in $\Re$.

Theorem 4 *(Schauder fixed point theorem)*

If A is a convex, compact subset of a banach space X, and $f : A \to A$ is continuous, then f has a fixed point in A.

2.3 Function Spaces

Now we introduce some Banach spaces which are very important for the study of impulsive differential equations.

Let J be any interval of $\mathbb{R}$, $S = \{ \tau_k : k \in \mathbb{Z} \} \subset \mathbb{R}$,and $J' = J \backslash S$. Now define $PC(J)$ and $PC^1(J)$ as follows

$PC(J) = \{u : J \to \mathbb{R};\ u$ is continuous for any $t \in J';\ u(\tau_k^+),\ u(\tau_k^-)$ exist, and $u(\tau_k^-) = u(\tau_k),\ k = 1, 2, ..., m\},$ and

$PC^1(J) = \{u \in PC(J);\ u$ is continuously differentiable for any $t \in J';\ u'(\tau_k^+)$, $u'(\tau_k^-)$ exist, $k = 1, 2, ..., m\}$,

we can see that $PC(J)$ and $PC^1(J)$ are Banach spaces when equipped with the respective norms

$$\|u\|_{PC(J)} = \sup\{|u(t)| : t \in J\ \},$$

and

$$\|u\|_{PC^1(J)} = \|u\|_{PC(J)} + \|u'\|_{PC(J)}.$$

For $u \in PC(J)$, and $J_k = [\tau_{k-1}, \tau_k]$ we consider the functions

$$\begin{aligned} u_k &: J_k \to \mathbb{R},\ k = 1, 2, ..., m+1, \\ u_k(t) &= u(t) \text{ if } t \in (\tau_{k-1}, \tau_k], \\ u_k(t) &= u(\tau_{k-1}^+) \text{ if } t = \tau_{k-1}. \end{aligned}$$

Then $\|u\|_{PC(J)} = \sup\{\|u_k\|_{C(J_k)} : k = 1, 2, ..., m+1\}$ and $PC(J)$ is equivalent to $\prod_{k=1}^{m+1} C(J_k)$, where $C(J)$ denotes the set of all continuous functions defined on J.

2.4 Lipschitz Continuity

Definition 8

A function $f : J \times D \to \mathbb{R}^n$, $J \subset \mathbb{R}$, $D \subset \mathbb{R}^n$, is called $K-$Lipschitzian with respect to x, or $f(\cdot,\cdot)$ is Lipschitz continuous in x, if $\forall\ (t,x),\ (t,y) \in J \times D$, $\|f(t,x) - f(t,y)\| \leq K \|x - y\|$; $K > 0$ is called the Lipschitz constant.

Remark 1

It is easy to see that continuous differentiability implies local Lipschitz continuity.

2.5 Topological Transversality Theorem

The topological transversality theory is one of the important techniques used to obtain existence of solutions for differential equations. It was introduced in 1959 by Granas (see for instance, [15]). In this section, we state some basic defenitions and the main results related to the topological transversality theorem.

Let X and Y be Banach spaces, C be a convex subset of Y, U be an open set in X, and $F : X \to C$ be a continuous map.

Definition 9

F is compact if $F(X)$ is contained in a compact subset of C. F is completely continuous if F maps bounded subset of X into compact subsets of C.

Definition 10

We say that f and g are homotopic if there is a continuous function $H : [0,1] \times X \to Y$ (called a homotopy between f and g) such that $H(0,x) = f(x)$ and $H(1,x) = g(x)$ for all $x \in X$.

Definition 11

An operator $H : [0,1] \times X \to Y$ is a compact homotopy if H is a homotopy and for all $\lambda \in [0,1]$, $H(\lambda, \cdot) : X \to Y$ is compact.

Definition 12

An operator $f : \overline{U} \to C$ is admissible if f is compact and has no fixed point on ∂U (boundary of U).

$M_{\partial U}(\overline{U}, C)$ will denote the class of all admissible maps from $\overline{U}$ into C.

Definition 13

A compact homotopy is admissible if for each $\lambda \in [0,1]$, the map $H(\lambda, \cdot)$ is admissible.

Definition 14

Two mappings g, h in $M_{\partial U}(\overline{U}, C)$ are homotopic if there is an admissible homotopy $H : [0,1] \times U \to C$ such that $H(0, \cdot) = g$ and $H(1, \cdot) = h$.

Definition 15

An operator $g \in M_{\partial U}(\overline{U}, C)$ is called inessential if there is a fixed point free, compact map $h : U \to C$ such that $g \mid_{\partial U} = h \mid_{\partial U}$. Otherwise g is essential.

Theorem 5

Let p be an arbitrary point in U, and let $g \in M_{\partial U}(U, C)$ be the constant map, $g(x) = p$. Then g is essential.

Theorem 6

A map $g \in M_{\partial U}(U, C)$ is inessential if and only if it is homotopic to a fixed point free compact map.

Theorem 7

Let g and h in $M_{\partial U}(U, C)$ be homotopic maps. Then g is essential if and only if h is essential.

Remark 2

1. The notion of homotopy plays an important role.
2. The notion of essential maps plays a key role in the topological transversality theory.

2.6 Impulsive Differential Equations

2.6.1 Classification of IDEs

The classification of system of differential equations involving impulse effects is not an easy task because such systems depend on three components: a continuous-time differential equation, an impulse equation, and a jump criterion. So the classification of IDEs depends on the classification of these three components. But in general the IDEs can be classified to three types (see [2],[33] for details).

1. Equations with fixed moments. These equations have the following form

$$\begin{aligned} \tfrac{dx}{dt} &= f(t,x) \quad , \qquad t \neq \tau_k \quad , \\ \Delta x(\tau_k) &= \varphi_k(x(\tau_k)) \end{aligned} \tag{2.1}$$

   where $\tau_0 < \tau_1 < ... < \tau_k < \tau_{k+1} < ...,\ k \in \mathbb{Z}$.

2. Equations with variable moments, which have the form

$$\begin{aligned} \tfrac{dx}{dt} &= f(t,x) \quad , \qquad t \neq \tau_k(x) \quad , \\ \Delta x &= \varphi_k(x) \quad , \qquad t = \tau_k(x) \end{aligned} \tag{2.2}$$

   where $\tau_k : \Omega \to \mathbb{R}$, Ω is the phase space, and $\tau_k(x) < \tau_{k+1}(x),\ k \in \mathbb{Z},\ x \in \Omega$.

3. Autonomous impulsive equations. The equations of this type have the form

$$\begin{aligned} \tfrac{dx}{dt} &= f(x) \quad , \qquad t \notin \sigma \quad , \\ \Delta x &= \varphi(x) \quad , \qquad t \in \sigma \quad , \end{aligned} \tag{2.3}$$

where σ is an $(n-1)$-dimentional manifold contained in the phase space $\Omega \in \mathbb{R}^n$.

The general feature of these equations is that their solutions are piecewise continuous functions with points of discontinuity at the moments of the impulse effect. We will consider, in our work, the equations with impulse effects at fixed moments.

We define Impulsive Differential Equations at fixed moment as follows:

Let $S = \{ \tau_k : k \in \mathbb{Z} \} \subset \mathbb{R}$ where $\tau_k < \tau_{k+1}$ for all $k \in \mathbb{Z}$, $\tau_k \to +\infty$ when $k \to +\infty$ and $\tau_k \to -\infty$ when $k \to -\infty$. Also, let $\tau_k^+ = \tau_k + 0$ and $\tau_k^- = \tau_k - 0$. If $J \subset \mathbb{R}$ is any real interval, we suppose that $x(t) = [x_1(t) \quad x_2(t) \ ... \ x_n(t)]^T$, is vector of unknown functions, and $f : J \times \mathbb{R}^n \to \mathbb{R}^n$,

$$f(t,x) = \begin{bmatrix} f_1(t, x_1(t), x_2(t), ..., x_n(t)) \\ f_2(t, x_1(t), x_2(t), ..., x_n(t)) \\ \vdots \qquad\qquad \vdots \\ f_n(t, x_1(t), x_2(t), ..., x_n(t)) \end{bmatrix} \quad ,$$

is continuous function on every set $[\tau_k, \tau_{k+1}] \times \mathbb{R}^n$.

Definition 16

A system of differential equation of the form

$$\frac{dx}{dt} = f(t,x) \quad , \qquad t \neq \tau_k \quad , \tag{2.4}$$

with conditions $\Delta x|_{t=\tau_k} = x(\tau_k^+) - x(\tau_k^-) = \varphi_k(x(\tau_k))$ where $\varphi_k : \mathbb{R}^n \to \mathbb{R}^n$ are continuous functions, $k = 0, \pm 1, \pm 2, ...,$ is called impulsive differential equation at

fixed impulse.

2.6.2 Properties of Solutions of IDEs

Definition 17

By a solution of the IDE (2.4) we mean a piecewise continuous $\phi : J \to \mathbb{R}$ with piecewise continuous first derivative such that

1. $\frac{d\phi(t)}{dt} = f(t, \phi(t)),\ t \neq \tau_k.$

2. $\phi(\tau_k^+) - \phi(\tau_k^-) = \varphi_k(\phi(\tau_k)),\ k = 0, \pm 1, \pm 2, ...$

Existence , Uniqueness and Continuability

The problem of existence and uniqueness of the solutions of impulsive differential equations is similar to that of the corresponding ordinary differential equations. The continuability of solutions is affected by the nature of the impulsive action. Here we introduce some theorems about existence, uniqueness and continuability of the solutions of IDEs. For more details one may refer to the following [2], [21] and [33].

Theorem 8

Let the function $f : \mathbb{R} \times \Omega \to \mathbb{R}^n$ be continuous on the sets $(\tau_k, \tau_{k+1}] \times \Omega,\ k \in \mathbb{Z}$ and for each $k \in \mathbb{Z}$ and $x \in \Omega$ suppose there exists the finite limit of $f(t, x)$ as $(t, y) \to (\tau_k, x),\ t > \tau_k$. Then for each $(t_0, x_0) \in \mathbb{R} \times \Omega$ there exists $T > t_0$ and a solution $x : (t_0, T) \to \mathbb{R}^n$ of the problem (2.4) with initial condition $x(t_0^+) = x_0$. If, moreover, the function f is locally Lipschitz continuous with respect to x in $\mathbb{R} \times \Omega$ then this solution is unique.

Theorem 9

Let the following conditions hold:

1. the function $f : \mathbb{R} \times \Omega \to \mathbb{R}^n$ is continuous in the sets $(\tau_k, \tau_{k+1}] \times \Omega,\ k \in \mathbb{Z}$ and for each $k \in \mathbb{Z}$ and $x \in \Omega$ suppose there exists the finite limit of $f(t, x)$ as $(t, y) \to (\tau_k, x),\ t > \tau_k$.

2. the function $\phi : (a, b) \to \mathbb{R}^n$ is a solution of (2.4).

Then the solution ϕ is continuable to the right of b if and only if there exists the limit $\lim\limits_{t \to b^-} \phi(t) = \eta$ and one of the following conditions is fulfilled:

1. $b \neq \tau_k$ for each $k \in \mathbb{Z}$ and $\eta \in \Omega$,

2. $b = \tau_k$ for some $k \in \mathbb{Z}$ and $\eta + \varphi_k(\eta) \in \Omega$.

Theorem 10

Suppose that, in addition to condition 1 in theorem (9), the following conditions hold:

1. the function f is locally Lipschitz continuous with respect to x in $\mathbb{R} \times \Omega$ then this solution is unique if it exists.

2. $\eta + \varphi_k(\eta) \in \Omega$ for each $k \in \mathbb{Z}$ and $\eta \in \Omega$.

Then for any $(t, x) \in \mathbb{R} \times \Omega$ there exists a unique solution of the initial value problem (2.4) with the initial condition $x(t_0^+) = x_0$, which is defined in an interval of the form (t_0, ω) and is not continuable to the right of ω.

Now we can represent the solution $x(t)$ of equation (2.4) with initial condition $x(t_0^+) = x_0$ in the following form

$$x(t) = \begin{cases} x_0 + \int_{t_0}^{t} f(s, x(s))\ ds \ + \sum\limits_{t_0<\tau_k<t} \varphi_k(x(\tau_k)) \ \ , \ t \in \Omega^+, \\ x_0 + \int_{t_0}^{t} f(s, x(s))\ ds \ - \sum\limits_{t\leq\tau_k\leq t_0} \varphi_k(x(\tau_k)) \ \ , \ t \in \Omega^-, \end{cases} \tag{2.5}$$

where Ω^+ and Ω^- are maximal intervals on which the solution can be continued to the right or to the left of the point $t = t_0$, respectively.

2.6.3 Linear Impulsive Systems

In this section we present some basic properties of linear impulsive differential eqautions. Consider the problem

$$\begin{aligned} x'(t) &= A(t)x(t) + \sigma(t),\ t \neq \tau, \\ \Delta x(\tau_k) &= B_k x(\tau_k),\ k = 1, 2, ..., m\ . \end{aligned} \tag{2.6}$$

Here $A(\cdot) : J \to \mathbb{R}^{n\times n}$ is a continuous matrix, $\sigma(\cdot) \in PC(J)$ and $B_k(\cdot)$ are constant matrices for all $k = 1, 2, ..., m$. In order to study the above system, we consider the corresponding homogeneous system.

$$\begin{aligned} x'(t) &= A(t)x(t),\ t \in J', \\ \Delta x(\tau_k) &= B_k x(\tau_k),\ k = 1, 2, ..., m, \end{aligned} \tag{2.7}$$

Representation of Solutions of a Linear System

Let $\Phi_k(t,s)$ denote the fundamental matrix for the linear equation

$$x'(t) = A(t)x \quad , \quad t \in (\tau_{k-1}, \tau_k] \ , \tag{2.8}$$

where $k \in \mathbb{Z},\ t,s \in (\tau_{k-1}, \tau_k]$ and let $\det(I + B_k) \neq 0$, $\tau_k < \tau_{k+1}$,

$\lim\limits_{k \to \pm\infty} \tau_k = \pm\infty$, $A(\cdot) \in PC(\mathbb{R}),\ B_k \in \mathbb{R}^{n \times n}$, $k \in \mathbb{Z}$.

Then the solution of the linear system is given by

$$x(t; t_0, x_0) = U(t, t_0^+)x_0 \tag{2.9}$$

where

$$U(t,s) = \begin{cases} \Phi_k(t,s) \quad ; \ t,s \in (\tau_{k-1}, \tau_k], \\ \Phi_{k+1}(t, \tau_k^+)(I + B_k)\Phi_k(\tau_k, s) \\ \qquad\qquad \text{for} \ \ \tau_{k-1} < s \leq \tau_k < t \leq \tau_{k+1} \quad , \\ \Phi_k(t, \tau_k)(I + B_k)^{-1}\Phi_{k+1}(\tau_k^+, s) \\ \qquad\qquad \text{for} \ \ \tau_{k-1} < s \leq \tau_k < t \leq \tau_{k+1} \ , \\ \Phi_{k+1}(t, \tau_k) \displaystyle\prod_{j=k}^{i+1} (I + B_j)\Phi_j(\tau_j, \tau_{j-1}^+)(I + B_i)\Phi_i(\tau_i, s) \\ \qquad\qquad \text{for} \ \ \tau_{i-1} < s \leq \tau_i < \tau_k < t \leq \tau_{k+1} \quad , \\ \Phi_i(t, \tau_i) \displaystyle\prod_{j=i}^{k-1} (I + B_j)^{-1}\Phi_{j+1}(\tau_j^+, \tau_{j+1})(I + B_k)^{-1}\Phi_{k+1}(\tau_k^+, s) \\ \qquad\qquad \text{for} \ \ \tau_{i-1} < t \leq \tau_i < \tau_k < s \leq \tau_{k+1} \quad . \end{cases} \tag{2.10}$$

Now, consider the nonhomogeneous system

$$\begin{aligned} x'(t) &= A(t)x + f(t) \quad , \quad t \neq \tau_k \ , \ t \in J \ , \\ \Delta x(\tau_k) &= B_k x(\tau_k) + h_k \ , \quad k = 1, 2, ... \end{aligned} \tag{2.11}$$

where $f(\cdot) \in PC(\mathbb{R}, \mathbb{R}^n)$, $h_k \in \mathbb{R}^n$, $k \in \mathbb{Z}$.

Any solution of (2.11) has the following form

$$x(t) = \begin{cases} U(t,t_0)x_0 + \int_{t_0}^{t} U(t,s)f(s)\ ds \ + \sum\limits_{t_0<\tau_k<t} U(t,\tau_k)h_k \ , \\ \qquad\qquad \text{for } t > t_0 \ , \\ U(t,t_0)x_0 + \int_{t_0}^{t} U(t,s)f(s)\ ds \ - \sum\limits_{t\leq\tau_k\leq t_0} U(t,\tau_k)h_k \ , \\ \qquad\qquad \text{for } t < t_0 \ , \end{cases} \tag{2.12}$$

where $U(t,s)$ as in (2.10).

Let an interval $[t_0, t_0+h] \subset J$ contain a finite number of points τ_k, then, for any $x_0 \in \mathbb{R}^n$, a solution of system (2.7) $x(t,x_0)$, $x(t_0,x_0)$, exists for all $t \in [t_0, t_0+h]$. Moreover, if the matrices $I + B_k$ are nonsingular, for all k such that $\tau_k \in [t_0, t_0+h]$, then $x(t,x_0) \neq y(t,y_0)$ for all $t \in [t_0, t_0+h]$ if $x_0 \neq y_0$.

Proof. see [33] ■

2.6.4 Nonlinear Impulsive Systems

Consider the nonlinear impulsive system

$$\begin{aligned} x'(t) &= A(t)x + F(t,x) \quad , \quad t \neq \tau_k \ , \ t \in J \ , \\ \Delta x(\tau_k) &= B_k x(\tau_k) + h_k(x(\tau_k)) \ , \quad k = 1, 2, ... \end{aligned} \tag{2.13}$$

where $A(\cdot) \in PC(\mathbb{R}, \mathbb{R}^{n\times n})$, $B_k \in \mathbb{R}^{n\times n}$, $k \in \mathbb{Z}$ and the functions $F : \mathbb{R} \times \Omega \to \mathbb{R}^n$, $h_k : \Omega \to \mathbb{R}^n$. Where $\Omega \subset \mathbb{R}^n$ is any open set.

Any solution of (2.13) can be represented in the following form

$$x(t) = \begin{cases} U(t,t_0)x_0 + \int_{t_0}^{t} U(t,s)F(s,x(s))\ ds \ + \sum\limits_{t_0<\tau_k<t} U(t,\tau_k)h_k(x(\tau_k)), \\ \qquad\qquad\qquad\qquad\qquad\qquad\qquad\qquad \text{for } \ t > t_0\ , \\ U(t,t_0)x_0 + \int_{t_0}^{t} U(t,s)F(s,x(s))\ ds \ - \sum\limits_{t<\tau_k<t_0} U(t,\tau_k)h_k(x(\tau_k)), \\ \qquad\qquad\qquad\qquad\qquad\qquad\qquad\qquad \text{for } \ t < t_0\ , \end{cases} \tag{2.14}$$

2.7 Caratheodory Function

$F : J' \times \mathbb{R}^n \to \mathbb{R}^n$ is an impulsive Caratheodory function if

1. $F(\cdot, x)$ is measurable for each $x \in \mathbb{R}^n$;

2. $F(t, \cdot)$ is continuous for almost all $t \in J'$;

3. for each $r > 0$, there exists $h_r \in L^1(J', \mathbb{R}_+)$ such that

$$\|x\| \le r \Longrightarrow \|F(t,x)\| \le h_r(t), \text{ for almost all } t \in J';$$

4. $\lim\limits_{t\to\tau_k^-} F(t,x) = F(\tau_k, x)$ and $\lim\limits_{t\to\tau_k^+} F(t,x)$ exist for every (t,x) where $(t,x) \in J' \times \mathbb{R}^n$, $k = 1, 2, ..., m$.

Chapter 3

Motivating Examples

In this chapter we present some examples that motivate the study of impulsive differential equations.

Example 1 [29]

A fish breeding pond maintained scientifically is an example of a system involving impulsive behaviour. Here the natural growth of the fish population is disturbed by making catches at certain time intervals and by adding fresh breed. The impulses are given at times $\tau_1, \tau_2, \ldots$. This problem can be described by:

$$\begin{aligned} Dx(t) &= \alpha x(t) Du(t) \quad , \\ x(t_0) &= x_0 \ , \end{aligned} \tag{3.1}$$

where D is the distributional derivative, u is a right-continuous function of bounded variations and $\alpha \in \mathbb{R}$. Assume that u is of the form

$$u(t) = t + \sum_{k=1}^{\infty} a_k \ H_k(t)$$

where

$$H_k(t) = \begin{cases} 0 & if \quad t < \tau_k \\ 1 & if \quad t \geq \tau_k \end{cases}, \ a_k \in \mathbb{R}$$

Note that the discontinuites of u are isolated. Further

$$Du = 1 + \sum_{k=1}^{\infty} a_k \ H_k(\tau_k)$$

where $H_k(\tau_k)$ is the Dirac measure concentrated at τ_k. The unique solution of this equation is given by:

$$x(t) = \frac{e^{\alpha(t-t_0)}}{\prod_{i=1}^{k-1}(1-a_i)} \ x_0, \ a_i \neq 1, \ \tau_{k-1} \leq t < \tau_k. \tag{3.2}$$

If $a_i = 0$ for $i = 1, 2, ...$ in (3.2) the equation (3.1) reduces to the equation:

$$\begin{aligned} x'(t) &= \alpha x(t), \ \alpha \in \mathbb{R}, \\ x(t_0) &= x_0, \end{aligned}$$

and the solution (3.2) reduces to

$$x(t) = e^{\alpha(t-t_0)} x_0, \ t \geq t_0 \ .$$

By considering several varieties of fish growing in one pond, the model of growth given in (3.1) can be generalized to a system of equations.

Example 2 [29]

The profit of a roadside inn on some prescribed interval of time $\tau < t < T$ is a function of the number of strangers who pass by on the road each day and of the number of times the inn is painted during that period. The ability to attract new customers into the inn depends on its appearance which is supposed to be indexed by a number x_1. During time intervals between paint jobs, x_1 decays according to the law:

$$x_1' = -k\ x_1,\ \ k \in \mathbb{R}^+.$$

The total profit in the planning period $\tau < t < T$ is supposed to be

$$W(t) = A \int_{\tau}^{T} x_1(t)\ dt \quad - \quad \sum_{i=1}^{N(T)} C_i\ ,$$

where $N(T)$ is the number of times the inn is repainted, $C_i\ , i = 1, ..., T,$ are the cost of each paint job and $A > 0$ is a constant. The owner of the inn wishes to maximize his total profit or equivalently to minimize - $W(T)$.

Example 3 [10]

In marketing, we consider a dynamic market model with n commodities. The supply and demand are denoted by the vectors $Q_s = (Q_s^1, ..., Q_s^n)$ and $Q_m = (Q_m^1\ , ..., Q_m^n)$, respectively. The price vector is denoted by $P = (P^1, ..., P^n)$. We assume that the supply and demand are given by functions which depend on time, prices, actual changes of prices, and on the expectation of the price rising. We denote this by

$$Q_m = M(t, P(t), P'(t), P''(t)) \tag{3.3}$$

and

$$Q_s = S(t, P(t), P'(t), P''(t)). \tag{3.4}$$

We also assume that the process of price adjustment is characterized by the equation

$$\frac{dP}{dt} = q(Q_m, Q_s). \tag{3.5}$$

For example, $\frac{dP^k}{dt} = \alpha_k(Q_m^k - Q_s^k),\ k = 1, ..., n$. We are interested in the evolution of the prices according to this model. Putting (3.3) and (3.4) into (3.5) and solving this equation with respect to $P''(t)$, we obtain the following second order equation:

$$P''(t) = F(t, P(t), P'(t)) \tag{3.6}$$

We suppose next that at certain times, $0 < \tau_1 < \tau_2 < ... < \tau_n < T$, the government, according to its market control policy, changes the actual prices at τ_k , $k = 1, ..., n$. This action may be viewed as an impulse at time τ_k at which the price vector $P(t)$ is replaced by the new price vector $I_k(P(\tau_k))$, where $I_k : \mathbb{R}^n \to \mathbb{R}^n$ is the mapping which yields the "new prices". Evidently, such an intervention into the market will also cause some changes in the process of price adjustment. Therefore, It seems reasonable to assume that the vector $P'(t)$ is replaced by $N_k(P(\tau_k), P'(\tau_k))$.

Example 4 [10]

In this example we consider a model of a cruise missile with deceiving impulses. Suppose that $y(t) \in \mathbb{R}^3$ denotes the position function of a cruise missile. The missile is launched from a point $y_0 \in \mathbb{R}^3$ and is supposed to hit a target at a point $y_1 \in \mathbb{R}^3$. According to the laws of motion, we can consider the trajectory of the missile $y(t)$

as a solution to the following second order systems of differential equations with Dirichlet boundary conditions

$$\begin{aligned} y''(t) &= f(t, y(t), y'(t)), \\ y(0) = y_0 \quad &; \quad y(T) = y_1. \end{aligned} \tag{3.7}$$

A solution to the BVP (3.7) represents the simplest and shortest trajectory from y_0 to y_1. Therefore, from a tactical point of view, this may be the least desirable since detection of the missile would lead to its destruction by the adversary. Therefore, it seems to be natural in this situation to change the direction of the missile several times in order to deceive the adversary and minimize the possibility of its destruction. The simplest way to do this is to change appropriately the direction of the missile at the time $0 < \tau_1 < \tau_2 < ... < \tau_n < T$ according to the actual position of the missile and its direction. That is, at the time τ_k , $k = 1, 2, ..., n$, an impulse

$$y'(\tau_k^+) = N_k(y(\tau_k), y'(\tau_k))$$

changes the velocity vector of the missile. The function N_k consists of commands, depending on the position and velocity of the missile, for the guidance system. One may include in N_k additional information concerning the location of the adversary's radar and missile detectors in such a way that the actual trajectory of the missile perceived by the adversary will be very confusing. It seems reasonable that one should impose some restrictions on the impulses N_k. The condition:

$$\text{if } \|y\| > R \text{ and } y \cdot y' > 0 \text{ then } y \cdot N_k(y, y') \geq 0 \tag{3.8}$$

can be interpreted as the requirement that the impulses N_k do not perturb " too much", the trajectory of the missile when it is still at a safe distance from the target, i.e. $\|y\| > R$. The condition (3.8) means that the change of the direction can be done only in some limited range, which is plausible from physical considerations. With these considerations and restrections in mind, it seems neverthless to be of interest to study such models and to interpret the introduction of impulses on the existence of solutions to the BVP (3.7).

Example 5 [29]

The Ito's stochastic differential equation is of the form

$$dx = f(t,x)\ dt\ +\ G(t,x)\ dw(t), \quad t_0 \leq t \leq T,$$

where f is such that the system

$$\frac{dx}{dt} = f(t,x),\ t_0 \leq t \leq T,$$

where x $\in \mathbb{R}^n$ admits a unique solution $x(t,x_0)$ for the initial state $x(t_0) = x_0 \in \mathbb{R}^n$, $G(t,x)$ is an $n \times n$ matrix valued function of (t,x), and w is separable Wiener process (Brownian motion) in Euclidean m-space. This equation is equivalent to a stochastic integral equation

$$x(t) = x(t_0) + \int_{t_0}^{t} f(s,x(s))\ ds\ + \int_{t_0}^{t} G(s,x(s))\ dw(s), \tag{3.9}$$

defined on $I = [t_0, T],\ T < \infty$. Assume that f and G are measurable in (t,x) for

$t \in I$ and $x \in \mathbb{R}^n$ and satisfy certain growth conditions. It is to be noted that

$$\int_{t_0}^{t} G(s, x(s))\ dw(s) = \lim_{p \to \infty} \sum_{j=0}^{p-1} G(\tau_j, x(\tau_j))\ [w(\tau_{j+1}) - w(\tau_j)] \tag{3.10}$$

where $t_0 \leq \tau_1 \leq ... \leq \tau_p = T$ and that τ_j become dense in $[t_0, t]$ as $p \to \infty$.

Example 6 [29]

In an optimal control problem given by a system

$$x' = f(t, x, u) \tag{3.11}$$

representing certain physical process, the central problem is to select the function $u(t)$ from a given set of controls so that the solution $x(t)$ of the system has a preassigned behaviour on a given time interval $[t_0, T]$ so as to minimize some cost functional. Suppose that the control function $u(t)$ has to be selected from the set of functions of bounded variations defined on $[t_0, T]$, then the solution $x(t)$ of the control system may possess discontinuities. Hence the given control problem has to be represented by a differential equation involving impulses.

Example 7 [31]

We consider a ball that is jumping on a flat horizontal surface (see Fig. 3.1). Loss of energy, caused by the friction of the surface, is characterized by a constant μ.

This process is simulated by a differential equation of a second order

$$m\frac{d^2x}{dt^2} = F \tag{3.12}$$

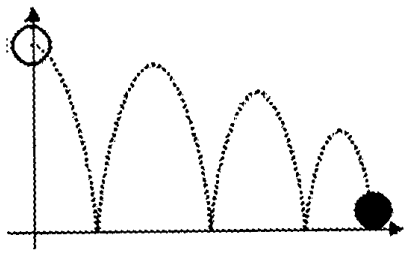

Figure 3.1: A ball that is jumping on a flat horizontal surface.

where m is the mass of the ball, $F = -mg$, is the force, and g is the acceleration of Earth's gravitation. At any time when the ball touches the surface, the vertical component of the vector velocity changes sign. The state of this process is described by the vertical position, velocity, and horizontal position of the ball. This process can be described with an impulsive differential equation

$$\frac{dx_1}{dt} = x, \ \frac{dx_2}{dt} = -g, \ \frac{dx_3}{dt} = \upsilon_0 \tag{3.13}$$

with initial condition $x = (x_1, x_2, x_3) = (h_0, 0, 0)$, and with condition of jump

$$I_k(x_1, x_2, x_3) = (x_1, -\mu \cdot x_2, x_3), \text{ for } u(x) = x_1 = 0. \tag{3.14}$$

In this model x_1 is the vertical position, x_2 is the velocity, x_3 is the horizontal position of the ball.

Example 8 [34],[2]

A body M attached by a spring to a fixed point A and excited by a force $F = h\sin(pt + \alpha)$, vibrates along a horizontal line and collides with a rigid wall B as shown in Fig. 3.2.

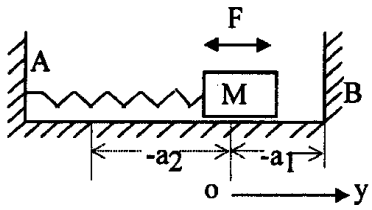

Figure 3.2: A body M attached by a spring to a fixed point.

The system can be described by the impulsive differential equations as follows

$$my'' + cy' + ky = h\sin(pt + \alpha) \quad , \quad y \in [-a_2, a_1] \quad , \tag{3.15}$$

$$y'^{+} = \begin{cases} -\mu y' \ , & y = a_1, \quad y' \in (0, b_1], \quad \mu \in (0, 1], \\ y' \ , & y = a_1, \quad y' \in [-b_2, 0), \end{cases} \tag{3.16}$$

where y'^{+} is the velocity of the body after the impact is applied, $y' = 0$ for $y = -a_2$, and all the constants are positive.

A multi-body system vibrating with impact is given by

$$Ny'' + Cy' + Ky = H\sin(pt + \alpha) \ , \quad g_i(t, y, y') \neq 0 \quad , \tag{3.17}$$

$$y'^{+} = By' \ , g_i(t, y, y') = 0 \ , \ i = 1, 2, ... \ , \tag{3.18}$$

where $y \in \mathbb{R}^n$; N, C, K, and $B \in \mathbb{R}^{n \times n}$; N, K are positive definite and C is nonnegative definite.

Example 9 [32]

The verge and foliot escapment mechanism shown in Fig. 3.3 consists of two

rigid bodies rotating on bearings. For simplicity we assume that these bearings are frictionless. The crowen gear has teeth spaced equally around its perimeter. The verge and foliot, which will be refered to as the verge, has two paddles that engage the teeth of the crown gear through alternating collisions. We ignore sliding

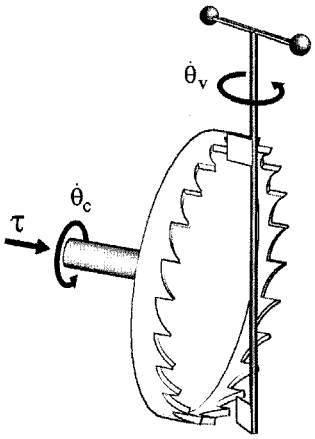

Figure 3.3: Verge and foliot escapement mechanism.

of the paddles along the crown gear teeth. There is an upper paddle and lower paddle. Collisions involving the upper paddle impart a positive torque impulse to the verge, while those involving the lower paddle impart a negative torque impulse to the verge.

The crown gear and verge have inertias I_c and I_v, contact radii r_c and r_v. The angular velocities of the crown gear and verge are $\dot{\theta}_c$ and $\dot{\theta}_v$, respectively, with the sign convention shown. There is a constant torque τ applied to the crown gear with positive direction shown. The velocities immediately before and after a collision are denoted by the subscripts 0 and 1, respectively, as in $\dot{\theta}_{c_0}$ and $\dot{\theta}_{c_1}$. The motion

of the crown gear and verge is governed by the differential equations

$$\ddot{\theta}_c(t) = \frac{1}{I_c}\tau - \frac{r_c}{I_c}F(\theta_c(t), \theta_v(t), \dot{\theta}_c(t), \dot{\theta}_v(t)) \tag{3.19}$$

$$\ddot{\theta}_v(t) = \sigma\frac{r_v}{I_v}F(\theta_c(t), \theta_v(t), \dot{\theta}_c(t), \dot{\theta}_v(t)) \tag{3.20}$$

where $\sigma = \begin{cases} +1 \quad , \quad \text{upper}, \\ -1 \quad , \quad \text{lower}, \end{cases}$

and the function $F(\theta_c(t), \theta_v(t), \dot{\theta}_c(t), \dot{\theta}_v(t))$ is the collision force, which is zero when the crown gear and verge are not in contact and is impulsive at the instant of impact. The collision force function F acts equally and oppositely on the crown gear and verge. The dynamics of the verge and foliot escapement mechanism can be described by an impulsive differential equation.

Chapter 4

Review of Recent Works

Consider the following problem

$$\begin{aligned} x'(t) &= A(t)x(t) + F(t, x(t)),\ t \neq \tau_k\ , \\ \Delta x(\tau_k) &= \varphi_k(x(\tau_k)),\ k = 1, 2, ..., m\ , \\ B(x) &= 0\ . \end{aligned} \tag{4.1}$$

Several papers dealing with the above problem have appeared in the literature. We shall review the most recent papers that are relevant to our study.

In 1992, Lakshmikantham et al. [22] considered problem (4.1) with $\varphi_k(x) = B_k x + I_k(x)$ and $B(x) = Mx(a) + Nx(b) - \alpha$. Under suitable conditions on the data, in particular a Lipschitz condition on F, they proved existence and uniqueness of solution. The Green's matrix for the linear homogeneous problem plays an important role in their study. The problem is converted to a fixed point problem, where they could use the Banach fixed point theorem.

In 1995, Liz [23] considered a scalar version of problem (4.1) with $A(t) \equiv 0$, $\varphi_k(x(\tau_k)) = I_k(x(\tau_k)) - x(\tau_k)$ and $B(x) = g(x(0), x(T))$. The author assumed the existence of an upper solution and a lower solution, which are well ordered and in the reverse order. He relied on maximum principle type results and developed the monotone method, which allowed him to obtain the existence of at least one solution.

In 1997, Cabada and Liz [7] generalized the results of Liz to the case of discontinuous impulsive differential equations, assuming the existence of an upper solution and a lower solution.

During the same year, 1997, Eloe and Henderson [9] considered the problem (4.1) with $A(t) \equiv 0$, $\varphi_k(x(\tau_k)) = r_k(\tau_k, x(\tau_k))$, $k = 1, 2, ..., m$ and $B(x) = Mx(a) + Nx(b) - c$. The authors employed Werner's method of forced monotonicity, which is based on defining partial orders on the set of continuous, $n-$vector real valued functions defined on $[a, b]$. These partial orders were constructed naturally, once Green's matrix for an associated linear homogeneous problem is characterized. Assuming the existence of an upper solution and a lower solution and some monotnicity condition on F, they proved the existence of at least one solution. They also considered the case of periodic boundary conditions.

In the year 2000, a paper by Franco and Nieto [12] was published. The authors considered the same problem as the one studied by Liz, with anti-periodic boundary conditions. The main result relied on comparison results and the existence of an upper solution and a lower solution.

A year later, i.e. in 2001, Hristova and Kulev [20] considered a scalar version of problem (4.1). The authors studied the existence and approximation of solutions.

Using quasilinearization techniques they obtain a monotone sequence of approximate solutions that converges quadratically to a solution.

The periodic problem has also received a great deal of attention (see for instance [5], [18], and [25] and the references therein). The paper by He and Yu [18], which appeared in 2002, analyzed the problem using comparison principles and the existence of an upper and a lower solutions. They obtained monotone sequences converging uniformly to the minimal and the maximal solutions of the problem under consideration. The paper [25] by Nieto was published during the same period (2002). This paper deals with a scalar version of problem (4.1). Under appropriate conditions on the data, the author was able to prove that possible solutions of a one-parameter family of problems related to the original one, are a priori bounded, and then used of the Schauder fixed point theorem. In 2004, Boucherif [5] considered the periodic problem using the technique of a priori bounds combined with the method of truncation functions to prove the existence of at least one solution.

We should point out that we have made no attempts to review all the works on boundary value problems for first order impulsive differential equations. We have been concerned only with those papers that are close to our preoccupation.

Chapter 5

Nonlinear Problems

In this chapter we will present our main results on the existence of solutions for nonlinear boundary value proplems for first order of impulsive differential equations. The corresponding linear problem plays an important role in our study.

5.1 Linear Problem

Consider the following linear problem

$$\begin{aligned} x'(t) &= A(t)x(t) + f(t),\ t \in J', \\ \Delta x(\tau_k) &= \sigma_k(\tau_k),\ k = 1, 2, ..., m\ , \\ Mx(0) + Nx(1) &= c\ , \end{aligned} \tag{5.1}$$

where $A(\cdot)$ is a continuous $n \times n$ matrix, M and N are $n \times n$ constant matrices, $c \in \mathbb{R}^n$ is a constant vector, $J = [0, 1]$, $J' = J \backslash \{\tau_k; k = 1, 2, ..., m\}$ and $\sigma_k \in L^1(J; \mathbb{R}^n)$, $k = 1, 2, ..., m$.

Let $\Phi(t)$ denote the fundamental matrix for the equation

$$x'(t) = A(t)x(t) \quad .$$

In order to study (5.1) we first consider the problem without impulses

$$\begin{aligned} &x'(t) = A(t)x(t) + f(t), \ t \in J \ , \\ &Mx(0) + Nx(1) = c. \end{aligned} \tag{5.2}$$

It is well known that any solution of

$$x'(t) = A(t)x(t)$$

is given by

$$x(t) = \Phi(t)v, \ v \in \mathbb{R}^n.$$

Use the method of variation of parameters to solve

$$x'(t) = A(t)x(t) + f(t).$$

Simple computations give

$$x(t) = \Phi(t)v_0 + \int_0^t \Phi(t)\Phi^{-1}(s)f(s)ds \tag{5.3}$$

where $v_0 \in \mathbb{R}^n$ is an arbitrary constant vector. The boundary condition

$$Mx(0) + Nx(1) = c$$

is satisfied if

$$(M\Phi(0) + N\Phi(1))\, v_0 + \int_0^1 \Phi(1)\Phi^{-1}(s)f(s)ds = c.$$

This implies that

$$(M\Phi(0) + N\Phi(1))\, v_0 = c \; - \int_0^1 \Phi(1)\Phi^{-1}(s)f(s)ds.$$

Let $D = (M\Phi(0) + N\Phi(1))$ and suppose that $\det(M\Phi(0) + N\Phi(1)) \neq 0$. Then D^{-1} exists and

$$v_0 = D^{-1}c \; - D^{-1} \int_0^1 \Phi(1)\Phi^{-1}(s)f(s)ds.$$

Using this expression for v_0 and (5.3) we see that the solution of (5.2) is given by

$$x(t) = \Phi(t)D^{-1}c \; - \Phi(t)D^{-1} \int_0^1 \Phi(1)\Phi^{-1}(s)f(s)ds + \int_0^t \Phi(t)\Phi^{-1}(s)f(s)ds.$$

We summarize the above discussion in the following

Lemma 1

Assume that $A(\cdot)$ is a continuous matrix such that

$$\det(M\Phi(0) + N\Phi(1)) \neq 0.$$

Then the solution of (5.2) is given by

$$x(t) = \Phi(t)D^{-1}c + \int_0^1 G(t,s)f(s)ds \text{ for all } \; t \in J,$$

where $G(t,s)$ is the Green's matrix, corresponding to the linear homogeneous problem

$$x'(t) = A(t)x(t) \quad , \quad t \in J \ ,$$
$$Mx(0) + Nx(1) = c$$

Moreover, $G(t,s)$ has the following representation

$$G(t,s) = \begin{cases} \Phi(t)\ D^{-1}\ M\ \ \Phi(0)\ \Phi^{-1}(s) & , \ 0 \le s < t < 1 \ , \\ \Phi(t)\ (D^{-1}\ M\ \ \Phi(0) - I)\ \Phi^{-1}(s) & , \ 0 \le s < t < 1 \ . \end{cases}$$

Notice that $G(t,s)$ has a jump discontinuity at $t = s$, but it is a bounded function.

Let $\gamma = \sup\{\|G(t,s)\|\ ;\ (t,s) \in J \times J\}$.

We now, use the above result to solve the impulsive problem (5.1).

Lemma 2

The solution of problem (5.1) is given by

$$x(t) = \Phi(t)\ D^{-1}\ c\ + \int_0^1 G(t,s)\ f(s)\ ds\ \ + \sum_{k=1}^{m} G(t,\tau_k)\ \sigma_k(\tau_k)\ . \tag{5.4}$$

Proof. Write $x(t) = u(t) + v(t)$ where u solves the problem

$$u'(t) = A(t)u(t) + f(t)\ ,$$
$$\Delta u(\tau_k) = 0 \ \ ,$$
$$Mu(0) + Nu(1) = c\ ,$$

and v solves the problem

$$
\begin{aligned}
v'(t) &= A(t)v(t) \quad , \\
\Delta v(\tau_k) &= \sigma_k(\tau_k) \quad , \\
Mv(0) + Nv(1) &= 0 \ .
\end{aligned}
$$

Simple computations lead to (5.4). ■

5.2 Nonlinear Problem

In this section we consider the following nonlinear problem

$$
\begin{aligned}
x'(t) &= A(t)x(t) + F(t, x(t)) \quad , \quad t \in J' \quad , \\
\Delta x(\tau_k) &= \varphi_k(x(\tau_k)) \quad , \quad k = 1, 2, ..., m \quad , \\
Mx(0) + Nx(1) &= c \quad .
\end{aligned} \tag{5.5}
$$

It follows from lemma (2) that any solution of (5.5) satisfies

$$
x(t) = \Phi(t)\ D^{-1}\ c\ + \int_0^1 G(t,s)\ F(s, x(s))\ ds \ + \ \sum_{k=1}^{m} G(t, \tau_k)\ \varphi_k(x(\tau_k)), \tag{5.6}
$$

and vice-versa.

Theorem 11

Assume that the following conditions hold

(H1) A is continuous and $\det\left(M\Phi(0) + N\Phi(1)\right) \neq 0$;

(H2) $F(\cdot,\cdot)$ is continuous on J and $F(t,\cdot)$ is Lipschitz continuous with Lipschitz constant K;

(H3) $\varphi_k \ : \mathbb{R}^n \to \mathbb{R}^n$ is Lipschitz continuous with Lipschitz constant l_k, $k = 1, 2, ..., m$;

(H4) $K + \sum_{k=1}^{m} l_k < \frac{1}{\gamma}$.

Then problem (5.5) has a unique solution.

Proof. Define an operator $T : PC(J) \to PC(J)$ by

$$(Tx)(t) = \text{right hand side of (5.6).}$$

It is clear that any solution of (5.5) is a fixed point of T and conversely any fixed point of T is a solution of (5.5).

We shall show that T is a contraction.

Let x , y $\in PC(J)$. Then

$$\begin{aligned} \|(Tx)(t) - (Ty)(t)\| \ \leq \ & \int_0^1 \|G(t,s)\| \ \ \|F(s,x(s)) - F(s,y(s))\| \ ds \\ & + \sum_{k=1}^{m} \|G(t,\tau_k)\| \ \ \|\varphi_k(x) - \varphi_k(y)\| \, . \end{aligned}$$

Using (H2) and (H3) we see that

$$\|(Tx)(t) - (Ty)(t)\| \leq (\gamma K + \gamma \sum_{k=1}^{m} l_k) \, \|x - y\|_0 \, .$$

Hence

$$\|Tx - Ty\|_0 \leq \gamma(K + \sum_{k=1}^{m} l_k) \|x - y\|_0 .$$

Condition (H4) implies that T is a contraction.

By the Banach Fixed Point Theorem, T has a unique fixed point x, which is the unique solution of (5.5). ■

Theorem 12

Suppose that, in addition to (H1), the following conditions hold

(H5) there exists $h : J \times \mathbb{R}_+ \to \mathbb{R}_+$ a Caratheodory function, nondecreasing with respect to its second argument such that

$$\|F(t, x)\| \leq h(t, \|x\|) \text{ a.e } t \in J', \ x \in \mathbb{R}^n;$$

(H6) $\varphi_k : \mathbb{R}^n \to \mathbb{R}^n$ continuous and there exists l_k such that

$$\|\varphi_k(x)\| \leq l_k, \ k = 1, 2, ..., m;$$

(H7) $\lim\limits_{\beta \to +\infty} \sup \frac{1}{\beta}(\int_0^1 h(t, \beta)dt + \sum_{k=1}^{m} l_k) < \frac{1}{\gamma}$.

Then system (5.5) has at least one solution.

Proof

Step 1. A priori bound on solutions.

From (5.6), any solution for (5.5) has the form

$$x(t) = \Phi(t)\ D^{-1}\ c\ + \int_0^1 G(t,s)\ F(s,x(s))\ ds\ \ +\ \sum_{k=1}^{m} G(t,\tau_k)\ \varphi_k(x(\tau_k)).$$

By taking the norm of both sides, we get

$$\begin{aligned}\|x(t)\| \ \ \leq\ \ \left\|\Phi(t)\ D^{-1}\ c\ \right\| + \int_0^1 \|G(t,s)\|\ \ \|F(s,x(s))\|\ ds \\ +\ \sum_{k=1}^{m} \|G(t,\tau_k)\|\ \ \|\varphi_k(x(\tau_k))\|\,,\end{aligned}$$

since $\Phi(\cdot)$ and D^{-1} are bounded, there is a constant $\rho > 0$ such that

$$\left\|\Phi(t)\ D^{-1}\ c\ \right\| \leq \rho.$$

Then from condition (H5) and (H6) we get

$$\|x(t)\| \leq \rho + \gamma \int_0^1\ h(t,\|x\|)\ dt\ + \gamma\ \sum_{k=1}^{m}\ l_k. \tag{5.7}$$

Now let

$$\beta_0 = \sup_{t\in J} \|x(t)\|\,.$$

Since h is nondecreasing with respect to its second argument,

$$\beta_0 \leq \gamma \left(\frac{\rho}{\gamma} + \int_0^1\ h(t,\beta_0)\ dt\ +\ \sum_{k=1}^{m}\ l_k\right)$$

$$\frac{1}{\gamma} \leq \frac{1}{\beta_0}\left(\frac{\rho}{\gamma} + \int_0^1\ h(t,\beta_0)\ dt\ +\ \sum_{k=1}^{m}\ l_k\right). \tag{5.8}$$

Now condition (H7) implies that there exists $r > 0$ such that for all $\beta > r$ we have

$$\frac{1}{\beta}\left(\frac{\rho}{\gamma} + \int_0^1 h(t,\beta)\ dt\ +\ \sum_{k=1}^{m} l_k\right) < \frac{1}{\gamma}. \tag{5.9}$$

Comparing (5.8) and (5.9) we can see that $\beta_0 \leq r$. Hence we have

$$\|x(t)\| \leq r \ \text{ for all } \ t \in J\ .$$

Step 2. Existence of solutions.

Let $\Omega = \{x \in PC(J);\ \ \|x\|_0 < r\ +1\}$. Then Ω is an open convex subset of $PC(J)$. Define an operator H by

$$\begin{aligned} H(\lambda,x)(t) \ &= \ \lambda\Phi(t)\ D^{-1}\ c\ + \lambda\int_0^1 G(t,s)\ F(s,x(s))\ ds \\ &\quad + \lambda\textstyle\sum_{k=1}^{m} G(t,\tau_k)\ \varphi_k(x(\tau_k)),\ \ 0 \leq \lambda \leq 1 \end{aligned} \tag{5.10}$$

$H(\lambda,\cdot) : \bar{\Omega} \to PC(J)$ is compact and has no fixed point on $\partial\Omega$. It is an admissible homotopy between the constant map $H(0,\cdot) \equiv 0$ and $H(1,\cdot) \equiv T$. Since $H(0,\cdot)$ is essential then $H(1,\cdot)$ is essential which implies that $T = H(1,\cdot)$ has a fixed point in Ω. This fixed point is a solution of our problem. ■

Theorem 13

Assume that the following conditions hold.

(C1) $A(\cdot)$ is continuous and $\det D \neq 0$;

(C2) there exists $\omega(\cdot) \in L^1(J, \mathbb{R}_+)$ and $g : [0, \infty) \to (0, \infty)$, nondecreasing with $\lim_{r \to +\infty} \frac{g(r)}{r} = 0$ such that

$$\|F(t, x)\| \leq \omega(t) g(\|x\|);$$

(C3) $\varphi_k : \mathbb{R}^n \to \mathbb{R}^n$ is nondecreasing, for each k, such that $\lim_{r \to +\infty} \frac{\|\varphi_k(r)\|}{r} = 0$.

Then (5.5) has at least one solution.

Proof

Recall that solutions of (5.5) satisfy

$$x(t) = \Phi(t)\ D^{-1}\ c\ + \int_0^1 G(t, s)\ f(s, x(s))\ ds\ \ +\ \sum_{k=1}^{m} G(t, \tau_k)\ \varphi_k(x(\tau_k))$$

Step 1. A priori bound on solutions.

It is clear that $\|\Phi(t)\ D^{-1}\ c\| \leq \rho$ for all $t \in J$.

We have

$$\begin{aligned} \|x(t)\| \ &\leq\ \left\|\Phi(t)\ D^{-1}\ c\right\| + \int_0^1 \|G(t, s)\|\ \ \|f(s, x(s))\|\ ds \\ &\qquad\qquad + \sum_{k=1}^{m} \|G(t, \tau_k)\|\ \ \|\varphi_k(x(\tau_k))\| \\ &\leq\ \rho + \gamma \int_0^1\ \omega(s) g(\|x(s)\|)\ ds\ + \gamma\ \sum_{k=1}^{m}\ \|\varphi_k(x(\tau_k))\|\,. \end{aligned}$$

Let $r_0 = \max\{\|x(t)\|\,;\ t \in J\}$. Then

$$r_0 \leq \rho + \gamma \int_0^1\ \omega(s) g(r_0)\ ds\ + \gamma\ \sum_{k=1}^{m}\ \|\varphi_k(r_0)\|\,.$$

This last inequality yields

$$r_0 \leq \rho + \gamma \|\omega\|_{L^1} g(r_0) \ + \gamma \sum_{k=1}^{m} \|\varphi_k(r_0)\| .$$

Hence

$$1 \leq \frac{\rho}{r_0} + \gamma \|\omega\|_{L^1} \frac{g(r_0)}{r_0} \ + \gamma \sum_{k=1}^{m} \frac{\|\varphi_k(r_0)\|}{r_0}. \tag{5.11}$$

It follows from (C1) and (C2) that there exists $R_0 > 0$ such that for all $r > R_0$

$$\frac{\rho}{r} + \gamma \|\omega\|_{L^1} \frac{g(r)}{r} \ + \gamma \sum_{k=1}^{m} \frac{\|\varphi_k(r)\|}{r} < 1. \tag{5.12}$$

Comparing inequalities (5.11) and (5.12) we see that $r_0 \leq R_0$.

Therefore

$$\|x(t)\| \leq R_0 \text{ for all } t \in J.$$

Step 2. Existence of solutions.

Set $U = \{x \in PC(J);\ \|x\|_0 < R_0 + 1 \text{ for all } t \in J\ \}$. Then U is open and convex in $PC(J)$. Use the proof of theorem (12) to complete the proof.

Hence problem (5.5) has at least one solution. ■

Theorem 14

Let the following conditions hold

(H8) The matrix A is bounded, i.e $\|A(t)\| \leq A_0$ for all $t \in J'$, and $\det D \neq 0$;

(H9) there exists a function $\omega(\cdot) \in L^2(J, \mathbb{R}_+)$ and $g : [0, \infty) \to (0, \infty)$, nondecreasing with the properties

i. there is $\delta \in L^2(J, \mathbb{R}_+)$ such that $e^{-\alpha t} g(d(t)) \leq \delta(t) g(e^{-\alpha t} d(t))$ for any $\alpha > 0$ and d continuous,

ii. $\int_a^{+\infty} \frac{d\sigma}{g(\sigma)} = +\infty$, a is any positive constant,

such that $\|F(t,x)\| \leq \omega(t) g(\|x\|)$ for all $(t,x) \in J' \times \mathbb{R}^n$.

Then system (5.5) has at least one solution.

Proof

Step 1. A priori bound on solutions.

Consider the following initial value problem

$$\begin{aligned} x'(t) &= A(t)x(t) + \lambda F(t, x(t)) \quad , \quad t \in J' \quad , \\ \Delta x(\tau_k) &= \lambda \varphi_k(x(\tau_k)) \quad , \quad k = 1, 2, ..., m \quad , \\ x(0) &= \lambda x_0 \quad . \end{aligned} \tag{5.13}$$

Here $0 \leq \lambda \leq 1$. For $\lambda = 0$, this problem has only the trivial solution. Thus, we shall consider only the case $0 < \lambda \leq 1$.

Let x be a possible solution of (5.13) on $J_0 = [0, \tau_1]$.

Let $\langle \cdot, \cdot \rangle$ denote the inner product on $\mathbb{R}^n$. Then

$$\langle x'(t), x(t) \rangle = \langle A(t)x(t) + \lambda F(t, x(t)), x(t) \rangle \, .$$

Since

$$\langle x'(t), x(t) \rangle = \frac{1}{2} \frac{d}{dt} \|x(t)\|^2 \, ,$$

and

$$\langle A(t)x(t) + \lambda F(t, x(t)), x(t)\rangle \leq \|A(t)\| \|x(t)\|^2 + \lambda \|F(t, x(t))\| \|x(t)\| .$$

It follows that

$$\begin{aligned}
\frac{1}{2}\frac{d}{dt}\|x(t)\|^2 &\leq \|A(t)\| \|x(t)\|^2 + \lambda \|F(t, x(t))\| \|x(t)\| \\
\frac{d}{dt}\|x(t)\|^2 &\leq 2\|A(t)\| \|x(t)\|^2 + 2\|F(t, x(t))\| \|x(t)\| \\
\|x(t)\|^2 &\leq \|x_0\|^2 + 2\int_0^t \|A(s)\| \|x(s)\|^2 ds \\
&\quad +2\int_0^t \|F(s, x(s))\| \|x(s)\| ds.
\end{aligned}$$

Conditions (H8) and (H9) give

$$\|x(t)\|^2 \leq \|x_0\|^2 + 2A_0 \int_0^t \|x(s)\|^2 ds + 2\int_0^t \omega(s)g(\|x(s)\|) \|x(s)\| ds. \tag{5.14}$$

Now, let $\theta(t) =$ the righthand side of (5.14). Then

(i) $\|x(t)\| \leq \sqrt{\theta(t)}$, $0 \leq t \leq \tau_1$.

(ii) $\theta'(t) = 2A_0 \|x(t)\|^2 + 2\omega(t)g(\|x(t)\|) \|x(t)\|$.

This implies that

$$\begin{aligned}
\theta'(t) &\leq 2A_0\theta(t) + 2\omega(t)g(\sqrt{\theta(t)})\sqrt{\theta(t)} \\
\frac{\theta'(t)}{2\sqrt{\theta(t)}} &\leq A_0\sqrt{\theta(t)} + \omega(t)g(\sqrt{\theta(t)})
\end{aligned}$$

or

$$\frac{d}{dt}(\sqrt{\theta(t)}) \leq A_0\sqrt{\theta(t)} + \omega(t)g(\sqrt{\theta(t)}). \tag{5.15}$$

Let $u(t) = \sqrt{\theta(t)}$ for $t \in [0, \tau_1)$. Inequality (5.15) becomes

$$u'(t) \leq A_0 u(t) + \omega(t)g(u(t))$$

or

$$u'(t) - A_0 u(t) \leq \omega(t)g(u(t))$$

Multibly both sides by $e^{-A_0 t}$

$$e^{-A_0 t}u'(t) - A_0 e^{-A_0 t}u(t) \leq e^{-A_0 t}\omega(t)g(u(t)).$$

This yields

$$\left(e^{-A_0 t}u(t)\right)' \leq e^{-A_0 t}\omega(t)g(u(t)).$$

From condition (H9) we get

$$\left(e^{-A_0 t}u(t)\right)' \leq \omega(t)\delta(t)g(e^{-A_0 t}u(t)). \tag{5.16}$$

Now let $y(t) = e^{-A_0 t}u(t)$. Then the above inequality (5.16) gives

$$y'(t) \leq \omega(t)\delta(t)g(y(t)).$$

Thus

$$\frac{y'(t)}{g(y(t))} \leq \omega(t)\delta(t),\ 0 \leq t \leq \tau_1. \tag{5.17}$$

Recall that $y(0) = u(0) = \sqrt{\theta(0)} = \|x_0\|$.

Inequality (5.17) implies that

$$\begin{aligned} \int_{\|x_0\|}^{y(t)} \frac{d\sigma}{g(\sigma)} &\leq \int_0^t \omega(s)\delta(s)ds \\ &\leq \|\omega\|_{L^2} \|\delta\|_{L^2}. \end{aligned}$$

This implies that there exists $R_0 > 0$ such that

$$\|x(t)\| \leq R_0, \ 0 \leq t \leq \tau_1.$$

Next, we work on $J_1 = [\tau_1, \tau_2]$. We have

$$\begin{aligned} x'(t) &= A(t)x(t) + \lambda F(t, x(t)), \quad \tau_1 < t < \tau_2 \\ \Delta x(\tau_1) &= \lambda \varphi_1(x(\tau_1)). \end{aligned} \tag{5.18}$$

First, observe that

$$\begin{aligned} \left\|x(\tau_1^+)\right\| &\leq \left\|x(\tau_1^-)\right\| + \|\varphi_1(x(\tau_1))\| \\ &\leq R_0 + \max\{\|\varphi_1(x)\|\,; -R_0 \leq x \leq R_0\}. \end{aligned}$$

Set $P_0 = R_0 + \max\{\|\varphi_1(x)\|\,; -R_0 \leq x \leq R_0\}$. Now, let x be a possible solution of (5.18). If $\|x(t)\| \leq P_0$ for all $t \in J_1$, then we take $R_1 = P_0$, and we continue the process on J_2. Otherwise, suppose there exist $\tau \in (\tau_1, \tau_2]$ such that $\|x(\tau)\| > P_0$. So that, we have $\left\|x(\tau_1^+)\right\| \leq P_0$ and $\|x(\tau)\| > P_0$. Since x is continuous we must have $\|x(\mu)\| = P_0$ for some $\mu \in (\tau_1, \tau)$ and $\|x(s)\| > P_0$ for all $s \in (\mu, \tau)$. Then for

all $t \in (\mu, \tau_2)$ we have

$$\frac{1}{2}\frac{d}{dt}\|x(t)\|^2 \leq \|A(t)\|\,\|x(t)\|^2 + \lambda\,\|F(t,x(t))\|\,\|x(t)\|\,.$$

Integrating the above inequality from μ to t, and proceeding as before we obtain

$$\begin{aligned}\int_{P_0}^{y(t)} \frac{d\sigma}{g(\sigma)} &\leq \int_{\mu}^{t} \omega(s)\delta(s)ds \\ &\leq \|\omega\|_{L^2}\,\|\delta\|_{L^2}\,.\end{aligned}$$

Therefore, there exist $R_1 > 0$ such that

$$\|x(t)\| \leq R_1,\ t \in J_1.$$

Continue this process on each interval $J_k,\ k = 1, 2, ..., m$, we obtain the following estimate

$$\|x(t)\| \leq R_k \text{ for all } t \in J_k,\ k = 1, 2, ..., m.$$

Step 2. Existence of solutions.

We work again on $J_0 = [0, \tau_1]$. The solution of

$$\begin{aligned} x'(t) &= A(t)x(t) + \lambda F(t, x(t)) \quad , \quad t \in J' \quad , \\ x(0) &= \lambda x_0 \quad , \end{aligned} \tag{5.19}$$

is given by

$$x(t) = \lambda\left[\Phi(t)x_0 + \Phi(t)\int_0^t \Phi^{-1}(s)F(s, x(s))ds\right]. \tag{5.20}$$

Let $X = C(J_0; \mathbb{R}^n)$ and define

$$H : [0,1] \times X \to X$$

by

$$H(\lambda, x)(t) = \lambda \left[\Phi(t)x_0 + \Phi(t) \int_0^t \Phi^{-1}(s)F(s, x(s))ds \right], \ 0 \le t \le \tau_1.$$

Let $\Omega_0 = \{x \in X : \|x\| \le R_0 + 1\}$. Then, we can prove that

$$H(\lambda, \cdot) : \bar{\Omega}_0 \to X$$

is a compact homotopy without fixed point on $\partial\Omega_0$. So, it is an admissible homotopy between the zero map $H(0, \cdot)$ and $H(1, \cdot)$. Since $H(0, \cdot)$ is essential, it follows that $H(1, \cdot)$ is essential and so has a fixed point in Ω_0. This solves (5.19) on $J_0 = [0, \tau_1]$. Call this solution x_1. Next, work on $J_1 = [\tau_1, \tau_2]$. Our problem is

$$\begin{aligned} x'(t) &= A(t)x(t) + \lambda F(t, x(t)) \quad , \quad t \in J' \ , \\ x(\tau_1^+) &= x_1(\tau_1^-) \ + \lambda\varphi_1(x_1(\tau_1^-)) \ . \end{aligned} \tag{5.21}$$

This is an initial value problem, with solution

$$x(t) = \Phi(t) \left[x_1(\tau_1^-) \ + \lambda\varphi_1(x_1(\tau_1^-)) \right] + \lambda\Phi(t) \int_{\tau_1}^t \Phi^{-1}(s)F(s, x(s))ds \tag{5.22}$$

Define $H_1(\lambda, x)(t) =$ the right hand side of (5.22). Proceeding as before we see that $H_1(1, \cdot)$ has a fixed point in $\Omega_1 = \{x \in X : \|x\| \le R_1 + 1\}$, which is a solution of (5.21). Call this solution x_2. Continue this process to get a solution x_{k+1} on

$J_k = [\tau_k, \tau_{k+1}]$ for each $k = 0, 1, 2, ..., m$. Then, we let

$$x(t) = \sum_{k=0}^{m} \chi_{[\tau_k, \tau_{k+1}]}(t) x_{k+1}(t),$$

where

$$\chi_{[\tau_k, \tau_{k+1}]} = \begin{cases} 0 & , \ t \notin [\tau_k, \tau_{k+1}] \\ 1 & , \ t \in [\tau_k, \tau_{k+1}] \ . \end{cases}$$

To satisfy the boundary condition

$$Mx(0) + Nx(1) = c \ ,$$

we must have

$$Mx_1(0) + Nx_{m+1}(1) = c. \ \blacksquare$$

5.3 Periodic Boundary Problem

In this section we consider the case $M = -N = I$; that is the periodic problem

$$\begin{aligned} x'(t) &= A(t)x(t) + F(t, x(t)) \quad , \quad t \in J' \ , \\ \Delta x(\tau_k) &= \varphi_k(x(\tau_k)) \quad , \quad k = 1, 2, ..., m \quad , \\ x(0) &= x(1) \ . \end{aligned} \tag{5.23}$$

Any solution of (5.23) can be given by

$$x(t) = \int_0^1 G(t, s) \ F(s, x(s)) \ ds \ + \ \sum_{k=1}^{m} G(t, \tau_k) \ \varphi_k(x(\tau_k)), \tag{5.24}$$

where $G(t,s)$ is the Green's matrix given by

$$G(t,s) = \begin{cases} \Phi(t)\ (I-\Phi(1))^{-1}\ \Phi(1)\ \Phi^{-1}(s) & ,\quad t<s\ , \\ \Phi(t)\ (I-\Phi(1))^{-1}\ \Phi(s) & ,\quad s<t. \end{cases}$$

Assume the following conditions hold throuhout this section.

(P1) $A(\cdot)$ is continuous and $A(t+1)=A(t)$ for all $t\in J$.

(P2) $F\ :\ J\times\mathbb{R}^n\ \to\ \mathbb{R}^n$ is continuous on $J'$and piecewise continuous at each $\tau_k,\ k=1,2,...,m$, with $F(t+1,x)=F(t,x)$.

Consider the Banach space

$$X_{per}=\{x\in PC(J);\ x(t+1)=x(t),\ t\in J\},$$

equipped with the norm

$$\|x\|_0=\sup\{\|x(t)\|\,;\ t\in J\}.$$

We have the following result.

Theorem 15

Assume, in addition to (P1) and (P2), that

(i) $\det(I-\Phi(1))\neq 0$;

(ii) there exists $c_k > 0$ with $\gamma \sum_{k=1}^{m} c_k < 1$ such that

$$\|\varphi_k(x)\| \leq c_k \|x\| ;$$

(iii) there exists $\omega : J \times \mathbb{R}_+ \to \mathbb{R}_+$ nondecreasing with respect to its second argument satisfying

$$\lim_{R \to +\infty} \sup \frac{1}{R} \int_0^1 \omega(s, R) ds < \frac{1}{\gamma}(1 - \gamma \sum_{k=1}^{m} c_k)$$

such that

$$\|F(t, x)\| \leq \omega(t, \|x\|) \text{ for all } t \in J, \ x \in \mathbb{R}^n.$$

Then problem (5.23) has at least one solution.

Proof. Any solution of (5.23) satisfies

$$x(t) = \int_0^1 G(t, s) \ F(s, x(s)) \ ds \quad + \quad \sum_{k=1}^{m} G(t, \tau_k) \ \varphi_k(x(\tau_k)).$$

This equality implies

$$\begin{aligned} \|x(t)\| \ &\leq \ \int_0^1 \|G(t, s)\| \, \|F(s, x(s))\| \ ds \quad + \quad \sum_{k=1}^{m} \|G(t, \tau_k)\| \, \|\varphi_k(x(\tau_k))\| \\ &\leq \ \gamma \int_0^1 \omega(s, \|x(s)\|) \ ds \quad + \gamma \ \sum_{k=1}^{m} \|\varphi_k(x(\tau_k))\| . \end{aligned}$$

Let $R_0 = \sup\{\|x(t)\| \ ; \ t \in J\}$. Then

$$R_0 \leq \gamma \int_0^1 \omega(s, R_0) \ ds \quad + \gamma \ R_0 \sum_{k=1}^{m} c_k$$

since $\omega(s,\cdot)$ is nondecreasing.

Hence

$$\frac{1}{\gamma}\left(1-\gamma\sum_{k=1}^{m}c_k\right)\leq\frac{1}{R_0}\int_0^1\omega(s,R_0)\ ds. \tag{5.25}$$

Now, the condition on ω implies that there exists $R^*>0$ such that for all $R>R^*$ we have

$$\frac{1}{R}\int_0^1\omega(s,R)\ ds\ \leq\frac{1}{\gamma}\left(1-\gamma\sum_{k=1}^{m}c_k\right). \tag{5.26}$$

Comparing (5.25) and (5.26) we see that

$$R_0\leq R^*.$$

Therefore, we obtain

$$x(t)\leq R^* \text{ for all } \ t\in J.$$

Consider $S_{R^*}=\{x\in X_{per}\ ;\ \|x\|_0\leq R^*\}$. Then S_{R^*} is a closed convex subset of X_{per}.

The operator $T:S_{R^*}\to X_{per}$ defined by

$$(Tx)(t)=\int_0^1 G(t,s)\ F(s,x(s))\ ds\ \ +\ \sum_{k=1}^{m}G(t,\tau_k)\ \varphi_k(x(\tau_k))$$

is continuous, maps S_{R^*} into itself and $\overline{T(S_{R^*})}$ is compact. To see this, let $y,z\in S_{R^*}$. Then

$$\begin{aligned}(Ty)(t)-(Tz)(t)=&\textstyle\int_0^1 G(t,s)\ \left[F(s,y(s))-F(s,z(s))\right]\ ds\\ &+\ \textstyle\sum_{k=1}^{m}G(t,\tau_k)\ \left[\varphi_k(y(\tau_k))-\varphi_k(z(\tau_k))\right].\end{aligned}$$

Hence

$$\begin{aligned}\|Ty - Tz\|_0 \;\leq\; \gamma \int_0^1 \; \|F(s, y(s)) - F(s, z(s))\| \; ds \\ + \gamma \sum_{k=1}^{m} c_k \, \|y - z\|_0 \, .\end{aligned}$$

Since $F(s, \cdot)$ is continuous it follows that

$$\text{if } \|y - z\|_0 \to 0 \text{ then } \|Ty - Tz\|_0 \to 0;$$

i.e. T is continuous.

Let $\psi \in S_{R^*}$. Then

$$(T\psi)(t) = \int_0^1 G(t, s) \; F(s, \psi(s)) \; ds \;\; + \;\; \sum_{k=1}^{m} G(t, \tau_k) \; \varphi_k(\psi(\tau_k)).$$

It follows that

$$\begin{aligned}\|T\psi(t)\| \;&\leq\; \gamma \int_0^1 \; \omega(s, \|\psi(s)\|) \; ds \;\; + \gamma \sum_{k=1}^{m} \; c_k \, \|\psi(\tau_k)\| \\ &\leq\; \gamma \int_0^1 \; \omega(s, R^*) \; ds \;\; + \gamma \sum_{k=1}^{m} \; c_k \; R^* \\ &\leq\; R^* \left(\frac{\gamma}{R^*} \int_0^1 \; \omega(s, R^*) \; ds \;\; + \gamma \sum_{k=1}^{m} \; c_k \; R^* \right).\end{aligned}$$

The definition of R^* and the condition on ω show that $\|T\psi\|_0 \leq R^*$; i.e. T maps S_{R^*} into itself.

Finally, we show that $\overline{T(S_{R^*})}$ is compact. To this end it is enough to show that

any sequence $\{\psi_l\} \subset T(S_{R^*})$ has a uniformly convergent subsequence. We shall reproduce here the proof of theorem (59) in [33] for the sake of completeness. We can easily show that $\{\psi_l\}$ is uniformly bounded and equicontinuous on $[0, \tau_1]$; and so by Ascoli-Arzela theorem, there is a subsequence $\{\psi_l^1\}$ uniformly convergent on $[0, \tau_1]$. On the interval $[0, \tau_1]$, $\{\psi_l^1\}$ is uniformly bounded and equicontinuous, and so it has a subsequence $\{\psi_l^2\}$, which is uniformly convergent on $[\tau_1, \tau_2]$. Repeating this process on the intervals $(\tau_2, \tau_3], ..., (\tau_m, 1]$, we see that the sequence $\{\psi_l\}$ has a subsequence $\{\psi_l^{m+1}\}$ which will be uniformly convergent on the interval $[0, 1]$. This means that $T(S_{R^*})$ has a compact closure in X_{per}. By the Schauder fixed point theorem, we conclude that T has a fixed point in S_{R^*}, which is a solution of our problem (5.23). ■

Bibliography

[1] Bainov, D. D., Hristova, S. G., Hu, S. and Lakshmikantham, V., Periodic boundary systems of first order impulsive differential equations, Diff. Integ. Eqns. 2(1989), 37-43.

[2] Bainov, D. D. and Simeonov, P. S., Impulsive differential equations: periodic solutions and applications, Longman Scientific and Technical, Essex, England, 1993.

[3] Boucherif, A., Impulsive Differential Equations. Conference Internationale sur les Modeles, Methodes Mathematiques er Informatiotiques en Dynamique des Populations, 10-12 May, 2003, Tlemcen, Algeria.

[4] Boucherif, A., On the Topological Transversality Theorem of Granas and Some Applications, Annales de Mathematiques 6 (1999), 1-8.

[5] Boucherif, A., Periodic Solutions of Impulsive Differential Equations, UAE-Math. Day, American Univ. of Sharjah, April 1st, 2004.

[6] Cabada, A. and Liz, E., Bundary Value Problems for Higher Order Ordinary Differential Equations with Impulses, Non. Anal. 32, No. 6, (1998),775-786.

[7] Cabada, A. and Liz, E., Discontinuous impulsive differential equations with nonlinear boundary conditions, Non. Anl. 28(1997), 1491-1497.

[8] Conover, R. A., A First Course in Topology an Introduction to Mathematical Thinking, Waverly Press, USA, 1975.

[9] Eloe, P. W. and Henderson, J., A boundary value problem for a system of ordinary differential equations with impulse effects, Rocky Mount. J. Math. 27(1997), 785-799.

[10] Erbe, L. and Krawcewicz, W., Existence of Solution to Boundary Value Problems for Impulsive Second Order Differential Inclusions, Rocky Mountain J. Math. 22, No. 2, (1992), 519-539.

[11] Erbe, L. H. and Liu, Xinzhi, Existence results for boundary value problems of second order impulsive differential equations, J. Math. Anal. Appl. 149(1990), 56-69.

[12] Franco, D. and Nieto, J. J., First-order impulsive ordinary differential equations with anti-periodic and nonlinear boundary conditions, Non. Anal. 42(2000), 163-173.

[13] Friedrichs, K. Spicial Topics in Analysis. Lecture Notes. New York University, 1954.

[14] Fu, X., Qi, J. and Liu, Y., General comparison principle for impulsive variable time differential equations with application, Non. Anal. 42(2000), 1421-1429.

[15] Granas, A., Homotopy Extension Theorem in Banach Spaces and Some of its Applications to the Theory of Nonlinear Equations, Bull. Acad. Pol. Sci. 7 (1959), 387-394.

[16] Guo, D., Existence of solutions of boundary value problems for nonlinear second order impulsive differential equation in Banach spaces, J. Math. Anal. Appl. 181(1994), 407-421.

[17] He, Z. and Yu, J., Periodic boundary value problem for first-order impulsive ordinary differential equations, J. Comp. Appl. Math. 138(2002), 205-217.

[18] He, Z. and Yu, J., Periodic boundary value problem for first-order impulsive ordinary differential equations, J. Math. Anal. Appl. 272(2002), 67-78.

[19] Hristova, S. G. and Bainov, D. D., Existence of periodic solutions of nonlinear systems of differential equations with impulse effect, J. math. Anal. Appl. 125(1987), 192-202.

[20] Hristova, S. G. and Kulev, G. K., Quasilinearization of a boundary value problem for impulsive differential equations, J. Comp. Appl. Math. 132(2001), 399-407.

[21] Lakshmikantham, V., Bainov, D. D. and Simeonov, P. S., Theory of Impulsive Differential Equations, World Scientific, Singapore, 1989.

[22] Lakshmikantham, V., Murty, K. N. and Sivasundaram, S., Impulsive differential systems for two-point boundary value problems, Appl. Math. Comp. 50(1992), 157-166.

[23] Liz, E., Existence and approximation of solutions for impulsive first order problems with nonlinear boundary conditions, Non. Anal. 25(1995), 1191-1198.

[24] Nenov, S. I., Impulsive controllability and optimization problems in population dynamics, Non. Anal. 36(1999), 881-890.

[25] Nieto, J. J., Periodic boundary value problems for first-order impulsive ordinary differential equations, Non. Anal. 51(2002), 1223-1232.

[26] Nieto, J. J., Basic Theory for Nonresonance Impulsive Periodic Problems of First Order, J. Math. Anal. Appl. 205,(1997), 423-433.

[27] Nirenberg, L. Functional Analysis. Lecture Notes, New York University, 1960.

[28] O'Regan, D. and Frigon, M., Existence results for first-order impulsive differential equations, J. Math. Anal. Appl. 193(1995), 96-113.

[29] Pandit, S. G. and Deo, S. G., Differential Systems Involving Impulses, Lect. Notes Math. 954, Springer Verlag, Berlin-New York, 1982.

[30] Pierson, G. C., impulsive differential equations of first order with periodic boundary conditions, Diff. Eqns. Dyn. Sys. 1(1993), 185-196.

[31] Randelovic, B. M., Stefanovic, L. V. and Dankovic, B. M., Numerical Solution of Impulsive Differential Equations, Ser. Math. Inform. 15, (2000), 101-111.

[32] Roup, A. V. and others, Limit Cycle Analysis of the Verge and Foliot Clock Escapement Using Impulsive Differential Equations and Poincaré Maps, Int. J. Control 76, No. 17,(2003), 1685-1698.

[33] Samoilenko, A. M. and Perestyuk, N. A., impulsive differential equations, World Scientific, Singapore, 1995.

[34] Shu, Z., On Impulsive Processes, International Journal of Non-Linear Mechanics 37(2002), 213-224.

[35] Sprecher, D. A., Elements of Real Analysis, Academic Press, New York, 1970.

[36] Yong, Li., Fuzhong, C. and Zhanghua, L., Boundary value problems for impulsive differential equations, Non. Anal. 29(1997), 1253-1264.

Vita

- Ali Saeed Salem Al-Talhan Al-Qahtani.
- Born in the south of Saudi Arabia, in 1972.
- Received B. Sc. degree in mathematics from King Saud University in 1994.
- Taught Mathematics at intermediate and secondary schools.
- Joined Mathematical Science Department in the Teachers College in Abha as a Graduate Assistant in 1998.
- Received M. Sc. Degree in Mathematics in May 2004.
- E-mail: Alitalhan@hotmail.com.