Variable Structure Control of Non-Linear Systems

by

Shaik Khasimul Mukarram

A Thesis Presented to the

FACULTY OF THE COLLEGE OF GRADUATE STUDIES

KING FAHD UNIVERSITY OF PETROLEUM & MINERALS

DHAHRAN, SAUDI ARABIA

In Partial Fulfillment of the
Requirements for the Degree of

MASTER OF SCIENCE

In

SYSTEMS ENGINEERING

May, 1998

VARIABLE STRUCTURE CONTROL OF NONLINEAR SYSTEMS

BY

SHAIK KHASIMUL MUKARRAM

A Thesis Presented to the

FACULTY OF THE COLLEGE OF GRADUATE STUDIES

KING FAHD UNIVERSITY OF PETROLEUM & MINERALS

DHAHRAN, SAUDI ARABIA

In Partial Fulfillment of the
Requirements for the Degree of

MASTER OF SCIENCE

In

SYSTEMS ENGINEERING

MAY, 1998

UMI Number: 1390785

UMI
300 North Zeeb Road
Ann Arbor, MI 48103

KING FAHD UNIVERSITY OF PETROLEUM AND MINERALS

DHAHRAN, SAUDI ARABIA

COLLEGE OF GRADUATE STUDIES

This thesis, written by

SHAIK KHASIMUL MUKARRAM

under the direction of his Thesis Advisor and approved by his Thesis Committee, has been presented to and accepted by the Dean of the College of Graduate Studies, in partial fulfillment of the requirements for the degree of

MASTER OF SCIENCE IN SYSTEMS ENGINEERING

Thesis Committee

Dr. Fouad AL – Sunni (Chairman)

Prof. Shahgir Ahmed (Co – Chairman)

Prof. Abdul Kebir Boukas (Member)

Dr. Moustafa El – Shafei (Member)

Dr. Abdulbasit Andijani
(Department Chairman)

Dr. Abdallah M. Al – Shehri
(Dean, College of Graduate Studies)
10/6/98
Date

Dedicated to

my beloved parents

whose prayers, sacrifice, inspiration and love

led to this accomplishment

Acknowledgements

In the name of Allah, Most Gracious, Most Merciful. Read in the name of thy Lord and Cherisher, Who created. Created man from a {leech-like } clot. Read and thy Lord is Most Bountiful. He Who taught {the use of} the pen. Taught man that which he knew not. Nay, but man doth transgress all bounds. In that he looketh upon himself as self-sufficient. Verily, to thy Lord is the return {of all}.

(The Holy Quran, Surah 96)

All praises are for ALLAH *subhanahu-wa-ta-Aaala*, the Most Compassionate, the Most Merciful. May peace and blessings be upon Prophet Muhammad, and his family. I thank Almighty Allah for giving me the knowledge and patience to complete this work. May He guide me and the whole humanity to the right path *(Aameen)*.

I acknowledge the support and facilities provided by the King Fahd University of Petroleum and Minerals for this work.

I would like to express my profound gratitude and appreciation to my thesis committee chairman Dr. Fouad AL-Sunni, for his constant help, guidance and the attention that he devoted throughout the course of this work. He was always kind, understanding and sympathetic to me.

I would like to thank co-chairman Prof. Shahgir Ahmed, whose continuous encouragement can never be forgotten. His valuable suggestions made this work interesting and learning for me.

Thanks are also due to my thesis committee members Prof. Abdul Kebir Boukas and Dr. Moustafa El-Shafei for their interest, cooperation, advice and constructive criticisms.

I also wish to thank the faculty, and the staff members of the Systems Engineering Department for their support, especially to Dr. Abdulbasit Andijani for his moral support and encouragement throughout this work.

Special acknowledgment is due to my friends Mahboob, Abdul Samad, Aleem, Anas, Hasan, Bhatti and to all my friends at KFUPM for their moral support, good wishes and the memorable days we shared together.

Finally, I thank my parents, brothers and Shahina for their love, sacrifices, prayers and understanding. They helped me a lot in achieving my objectives.

Contents

Acknowledgements ii

Abstract(English) ix

Abstract(Arabic) x

1 Introduction 1

1.1 Motivation 1

1.2 Proposed Work 3

1.3 Organization of the thesis 3

2 Literature Review 5

3 Overview of Feedback Linearization and Variable Structure Control Theory 12

3.1 Feedback Linearization 12

3.1.1 Mathematical Tools 14

3.1.2 Lie Derivatives and Lie Brackets 15

3.1.3 Definition of Input-State Linearization 16

3.1.4 Conditions for Input-State Linearization 18

3.1.5 Limitations of Feedback Linearization 20

3.2 Variable Structure Control 21

3.2.1 Brief History of VSC 24

3.2.2 Basic Notion of VSS Theory 28

3.2.3 Design of VSC 30

3.2.4 Chattering 32

3.2.5 Robustness of VSC 34

3.2.6 Attractive Features of VSS 36

4 Plant Augmentation Methodology **37**

4.1 Augmenting the plant with an integrator 42

4.2 Adaptive VSC Methodology 47

4.2.1 Design of Adaptive VSC 51

4.2.2 Inaccessible States case 56

4.2.3 Replacing the integrator with Low Pass Filter 59

5 Simulation Results **60**

5.1 Example 1 60

5.1.1 Results 64

5.2 Example. 2 78

5.2.1 Results 83

5.3 Example 3 90

5.3.1 Results 94

5.4 Comparison with Kanellakopoulos et al. Scheme 101

5.4.1 Kanellakopulos et al. Method (Scheme 1) 101

5.4.2 Adaptive VSC Method (Scheme 2) 102

5.4.3 Comparison 105

6 Conclusions & Recommendations **113**

6.1 Conclusions 113

6.2 Recommendations 114

Appendix A **115**

References **117**

List of Figures

3.1 Input-State Linearization 17

3.2 A simple VSC example. (a) System Model. (b) Regions defined by the Switching logic 23

3.3 Phase Portraits. (a) For System I (b) For System II (c) Overall System 25

4.1 The augmented plant concept 43

4.2 Model of the augmented plant with a pure integrator 44

4.3 Block diagram of the Luenberger Observer 50

4.4 Block diagram of the augmented system along with n+1 order Luenberger Observer 52

4.5 Proposed Scheme(States of the NL system are Accessible.) 54

4.6 Proposed Scheme(States of the NL system are not Accessible.) 55

4.7 Integrator replaced with LPF 59

5.1 Example 1. Accessible States: Const. Par. Uncertainty (Without Integrator) 66

5.2 Example 1. Accessible States: Sine par. Uncertainty. (Without Integrator) 67

5.3 Example 1. Accessible States: Only Constant Par. Uncertainty . . . 68

5.4 Example 1. Accessible States: Constant Par. Uncrt. with ext. disturbance 69
5.5 Example 1. Accessible States: Case 1. 70
5.6 Example 1. Accessible States: Case 2. 71
5.7 Example 1. Accessible States: Case 1.(with integrator replaced by LPF) 72
5.8 Example 1. Accessible States: Case 2. (with integrator replaced by LPF) 73
5.9 Example 1. Inaccessible States: Case 1. 75
5.10 Example 1. Inaccessible States: Case 2. 76
5.11 Example 2. Accessible States: Case 1. 85
5.12 Example 2. Accessible States: Case 2. 86
5.13 Example 2. Inaccessible States: Case 1. 87
5.14 Example 2. Inaccessible States: Case 2. 88
5.15 Example 3. Accessible States: Case 1. 95
5.16 Example 3. Accessible States: Case 2. 96
5.17 Example 3. Inaccessible States: Case 1. 98
5.18 Example 3. Inaccessible States: Case 2. 99
5.19 Kanellakopoulos Scheme: case 1. 107
5.20 Kanellakopoulos Scheme : Case 2. 108
5.21 Kanellakopoulos Scheme : Case 3. 109
5.22 Proposed Scheme: case 1. 110
5.23 Proposed Scheme : Case 2. 111
5.24 Proposed Scheme : Case 3. 112

List of Tables

5.1 Results of Example 1. 77

5.2 Results of Example 2. 89

5.3 Results of Example 3. 100

5.4 Comparison table for both schemes 105

Abstract

Name: Shaik Khasimul Mukarram

Title: Variable Structure Control of Nonlinear Systems

Degree: Master of Science

Major Field: Systems Engineering

Date of Degree: May 1998

Variable Structure Control(VSC) with sliding mode is a special type of control technique that is capable of making a control system robust with respect to system parameter variations and external disturbances. The chattering of the VSC signal can be reduced by several methods. One way is to augment the system with an integrator to isolate the system from the VSC control signal which causes the chatter. In addition, the magnitude of the switching function can be reduced by estimation of the uncertainty. In this work, we designed a Variable Structure Controller for linearizable systems. The concept of augmented plant together with the identification of the uncertainty through an observer has been used to design a controller for uncertain nonlinear systems which do not necessarily meet the matching conditions. The scheme is also shown to reduce the chattering. The simulation and the comparison studies reported in this thesis suggest the usefulness of our scheme.

King Fahd University of Petroleum and Minerals, Dhahran.
May 1998

خلاصة الرسالة

إسم الطالب : شيخ خشيم المكرم

عنوان الرسالة : متحكمات متغيرة البنية للأنظمة الغير خطية

التخصص : هندسة نظم

تاريخ الشهادة : يونيو 1998

التحكم متغير البنية هو أحد أنواع التحكم المكين ضد الأخطاء في المعاملات وضد الإشارات المتداخلة مع عمل النظام. ولكن ظاهرة لقلقة إشارة التحكم تحد من إستخدامه. في هذه الدراسة نضع وحدة تكامل أمام النظام بعد تحويله إلى نظام خطي. ثم نصمم متحكم متغير البنية للنظام الناتج. أيضا نصمم ملاحضا بهدف تقدير الأخطاء. بعد ذلك نقدم دراسة معتمدة على المحاكاة للمتحكمات المقترحة.

ماجستير في العلوم

جامعة الملك فهد للبترول والمعادن

الظهران–المملكة العربية السعودية

يونيو 1998م

Chapter 1

Introduction

1.1 Motivation

In this chapter, a brief look at the motivation behind the research in the field of nonlinear systems analysis and design is taken. The motivation of using the feedback linearization technique and designing the variable structure controller for the nonlinear system is also established. Finally, the organization of the thesis is presented.

In the past, the computational difficulty associated with nonlinear control analysis and design has limited the application of nonlinear control methods. This is, perhaps due to the complex behavior of nonlinear systems which can display many, often undesirable phenomena, such as limit cycle, chaos phenomena etc., Besides, nonlinear systems are described by nonlinear differential equations which generally cannot be solved.

In the past, feedback control systems were restricted to linear systems or systems that can be linearized by conventional linear methods, such as the traditional lin-

earization process which expands the nonlinear differential state equations into a Taylor series about an operating point. Although, linear control methods perform well over a small range of operation, they are impractical to physical systems which are mostly nonlinear.

Recently, as the advent of powerful microprocessors improved our computational ability, many researchers and designer renewed their interest in the development and application of nonlinear control methodologies. Nowadays, tools for analyzing and designing nonlinear control systems are available, such as the describing function approach, the phase plane method and Lyapunov's methods, and adaptive control. In spite of these methods, that have been proposed, our understanding of the behavior of nonlinear systems is still far from complete, and the linearization technique is still of great interest. Unfortunately, the available methods for linearization of nonlinear systems such as approximate linearization, and pseudolinearization are based on approximations of the dynamics.

Recent developments in the theory of geometric nonlinear control provide powerful methods for control design of Nonlinear systems. The feedback linearization scheme is a powerful method as it is based on exact cancellation of the nonlinearities present in the system. The feedback linearization approach requires a perfect model of the system in order to achieve linearization of the closed loop system.

However, for many real systems, there often exist inevitable uncertainties in their constructed models. In addition, there exists uncertainty in the parameters that are not exactly known or are difficult to estimate. Therefore, the design of a robust controller that deals with uncertainties in the parameters of a nonlinear system is very important.

Variable Structure Control (VSC) with sliding mode is capable of making a control system robust with respect to system parameter variations and external disturbances. In addition, the technique provides an easy way to design the control law for a plant, linear or Nonlinear.

1.2 Proposed Work

- We propose the concept of Plant Augmentation to the Linearizable Systems.
- Both systems with disturbances and systems with parameter uncertainties will be considered.
- We propose to investigate the problem of inaccessible states for Nonlinear Systems. To this end, we use the observer designed by Solsona et al. [36] for the Nonlinear Systems to estimate the states of the Nonlinear System. The estimates of the states are then used for the linearization of the plant.
- Simulations will be performed to illustrate the proposed work and to compare our schemes with some existing schemes.

1.3 Organization of the thesis

In Chapter 2, the literature survey related to this thesis is presented. In Chapter 3, the concepts of feedback linearization and variable structure control theory are discussed. The design of variable structure controller is also discussed. In Chapter 4, a detailed discussion of the plant augmentation method is carried out. Firstly, a linear plant without uncertainties is dealt and in the later stage, the technique

is extended to linearizable systems with parameter uncertainties and external disturbances. In the latter part, the problem of inaccessible states for the nonlinear systems is also dealt with. In Chapter 5, the simulation results are discussed to illustrate the proposed work. In Chapter 6, the contributions and conclusions of this work are presented with some future research directions.

Chapter 2

Literature Review

A survey of the literature on feedback linearization and variable structure systems theory is presented in this chapter.

Significant research effort has been extended in nonlinear systems linearization during the past decade. This explains the appearance of a number of papers about feedback linearization in the control literature.

Krener [28] solved the problem in which nonlinear systems can be transformed into linear systems, using only a change of variables [41]. Su [54] provided the necessary and sufficient conditions to guarantee the existence of a feedback linearization and mappings to achieve global linearization of a nonlinear system for the single-input single-output case in which a nonlinear system is transformed to a linear system in the controllability canonical form.

Su et al. [30] provided the necessary and sufficient conditions for the existence of a local and global transformation and state feedback linearization for the multi-input multi-output case.

There are different transformation techniques available for linearization of nonlinear

systems. These transformation schemes are basically used to transform nonlinear systems into the controllability canonical form. Recently, a transformation into generalized controller canonical forms for nonlinear dynamics is proposed in Fliess [18]. Under such transformation, nonlinear dynamics can be exactly linearized via dynamic feedback.

The theory of feedback linearization is now well developed and understood [6, 7 and 8]. Slotine [52] has given a complete discussion of this theory and its drawbacks for SISO as well as MIMO Nonlinear Systems. Conditions under which nonlinear systems can be linearized have also been discussed.

To deal with uncertain nonlinear systems, two main approaches have been proposed: adaptive control approach and Lyapunov-based control approach. If the uncertainties appear strictly as uncertain parameters, adaptive control techniques can be used. In the Lyapunov-based control approach, a Lyapunov function is constructed based on which a state feedback control is synthesized using the bounds on the uncertainties.

Sastry et al. [47] and Taylor et al. [11] used the adaptive control approach. Barmish et al. [4] used the Lyapunov-based control approach.

Petersen [45] discussed the importance of the matching conditions in the stabilization of uncertain systems.

Calvet et al. [9] proposed the design of a stabilizing controller for a nonlinear system in the presence of parametric uncertainty. The proposed design does not necessarily require structure matching conditions between the real plant and the nominal model of the plant. Their robust control design is based on the second method of Lyapunov where algebraic Riccati equations need to be solved.

Chou et al. [10] proposed a design of robust stabilizing controllers for uncertain nonlinear systems. Two categories of uncertainties, the uncertain parameters and the structured uncertainties were considered. A feedforward-like control design was used to achieve robust stability of the system with matched uncertainties, and a parameter diffeomorphism was presented as a high gain control technique to robustify the cancellation of unmatched uncertainty. A simple parameter can be adjusted on-line to suppress the influences of uncertainties on the closed-loop system.

Schoenwald et al. [48] proposed a method for robust stabilization of the uncertain nonlinear system exhibiting parametric uncertainty. A Taylor series of the system about the nominal parameter vector coupled with a feedback linearizing control law yields a linear system plus nonlinear perturbations about the nominal parameters. Via a structure matching condition, a Lyapunov based control law was shown to stabilize the full system. But the drawback to this approach is that the linearizing coordinate transformation depends on the uncertainty, thus it is unknown.

Kwanghee et al. [39], presented a model reference adaptive control scheme for nonlinear system in a pure-feedback canonical form with unknown parameters. They restricted their study to a class of "well structured" nonlinear systems called pure-feedback systems. But under some mild assumptions the design can also be applied to a more general class of nonlinear plants.

Etchechoury et al. [36] discussed the stability of nonlinear plants that include an observer for their feedback linearization. They analysed the situation for a class of nonlinear systems and a class of observers and set the proper sufficient condition that makes possible the stabilization of the whole system: the plant plus the observer.

A number of practical applications using exact feedback linearization have been reported in the literature. These include: aerospace engineering [19, 20], robot manipulators [21, 22], power systems [37], chemical engineering [8], stepper motors [62] and power converters [49].

An excellent survey of feedback linearization and other linearization methods for nonlinear systems have been discussed in [15].

The design of a robust controller that deals with uncertainties of a nonlinear system is an important subject [22]. And one such robust controller can be designed using the Variable Structure Control theory.

The theory of Variable Structure Systems was first proposed and studied in the early 1950s by Soviet researchers [29, 30, 31, 32, 33 and 34]. VSC is capable of making a control system very robust with respect to system parametric uncertainties and external disturbances [35, 36]. But the main concern when using the VSC technique is to avoid the excessive chatter. In the steady-state, chattering appears as a sustained oscillation around the desired equilibrium point and may excite unmodelled high-frequency dynamics of the system which may jeopardize system stability. Therefore, it is desirable to seek effective methods of suppressing the chatter [37, 38].

Slotine et al. [35, 39] suggested a solution to the problem of chattering by smoothing out the control discontinuity in a thin boundary layer neighboring the switching surface. They replaced the signum term in the expression of the control law u by $[s(x)/(\lambda_{n-1})\epsilon]$, where ϵ is the boundary layer width and λ_{n-1} is the $(n-1)^{th}$ coefficient of the switching surface. The introduction of a boundary layer around the switching surface leads to an explicit trade-off between tracking precision and ro-

bustness to unmodelled high frequency dynamics while allowing avoidance of control chattering.

Ambrosino et al. [19], also suggested a solution for the chattering problem based on the same lines of slotine and sastry. They replaced the discontinuous sign function by a continuous function of the form $[s(x)/(\mid s(x) \mid +\delta)]$, where δ is a positive constant which makes the control $u(x)$ continuous. But there is no systematic method of choosing the δ.

Burton et al. [7] extended the same solution for multivariable case in which the smoothing function is of the form $[s_i(x)/(\mid s_i(x) \mid +\delta_i)], i = 1, 2, \cdots, m$.

Coetsee et al. [51] discussed how the tracking performance can be further improved using the sliding control and online parameter estimation techniques. The adaptation scheme fully exploits the closed-loop dynamic structure created by the sliding controller and the boundary layer concept. The designer can progressively refine controller tracking performance by identifying the most significant parameter errors and sequentially extending adaptation to them.

Espana et al. [35] proposed a method which allows the designer to simultaneously satisfy the conflicting requirements of short sliding plane reaching time and transient behavior degradation due to the effect of chattering. A switching zone about the switching surface is created such that the state feedback switching parameters, outside the switching zone, are replaced inside the switching zone by switching parameters which make s(x) = 0. The strategy is illustrated with a microprocessor-based design for the control of a d.c. motor. The main drawback of this work is that they did not take parameter variations and external disturbances into consideration.

Olgac and Chang [43] proposed a strategy to eliminate the control chattering. They

used the constant rate reaching law until the first crossing of the sliding plane and then applied the proportional rate reaching law just after the first crossing of the sliding plane. This control will maintain the sliding of the state on $s(x) = 0$. As a result no control chatter appears on the sliding plane. But the disadvantage of the this strategy is that only small ranges of parameter variations are tolerable.

Chang et al. [16] presented a new adaptive chattering alleviation algorithm. The adaptive control algorithm consists of two phases. In phase one, the time required to reach the switching surface is minimized. In phase two, they alleviate the chattering about the switching surface in the sliding mode. The automatic switching between these two phases is based on a recursive prediction procedure performed at each step. But this work doesn't deal with the effect of external disturbances.

Young et al. [59] proposed two different concepts for chattering reduction in sliding mode control. They are Boundary Layer Equivalent Control and Frequency Shaping of Discontinuous control. In the first method, the normal components of the sliding manifold are made continuous which means there is no chattering. In the second method, filtering techniques are used to acquire the disturbance rejection property in finite time with continuous or desirably smooth control inputs.

Zaremba [61] used the idea of hierarchical VSC with on-line iterative tuning of sliding hyperplanes and control function switching terms. The algorithm is based on defining certain local performance indices instead of a global one and is shown to improve the response of the system considerably.

AL-Sunni et al. [1, 2] proposed a new Hybrid scheme employing both adaptive and fuzzy logic schemes to smooth out the chattering phenomenon and simultaneously increase the speed of the system response. The adaptive part provides the

appropriate hyperplane slopes to maximize the system performance and the gain is adjusted depending upon the error and allowable chattering in the system. The fuzzy part along with the self organizing gain effectively reduces chattering in the control signal. The simulation results show that the hybrid scheme is very effective in reducing both magnitude of the control and chattering phenomenon. One way of reducing the steady-state error for systems represented in state space is by inserting an integrator in the feedforward path between the error comparator and the plant [42]. This is known as augmented error approach.

Billing et al. [3] proposed the insertion of a low pass filter ahead of the plant to smooth out the VSC output signal. Filtering methods for suppressing chattering are proposed by in [5, 6, 7].

Chapter 3

Overview of Feedback Linearization and Variable Structure Control Theory

In this Chapter, the fundamental concepts of feedback linearization and variable structure control theory and various properties of VSC are dealt with in detail.

3.1 Feedback Linearization

The input-state feedback linearization principle is described in this section. Feedback Linearization is the use of coordinate transformation and state feedback to algebraically transform a nonlinear system to a linear one. Once the nonlinear system has been suitably transformed, quite possibly in another coordinate system, the resulting linearized system can be controlled through additional state feedback using

well-established linear control methodologies. Consequently, feedback linearization has been an attractive control design method for highly nonlinear systems.

There are two forms of feedback linearization. They are input-state feedback linearization and input-output feedback linearization. This thesis is concerned only with the input-state feedback linearization.

Feedback Linearization relies on transforming the system's differential equations into the controllable canonical form [29] and then introducing a linearizing feedback [60]. A system is said to be in a controllable canonical form if its dynamics are given by:

$$\frac{d^n x}{dt^n} = \mathbf{f}(\mathbf{x}) + \mathbf{g}(\mathbf{x})u \tag{3.1}$$

where u is the scalar control input, and $\mathbf{x} \in R^n$ is the state vector:

$$\mathbf{x} = [x \quad \frac{dx}{dt} \quad \cdots \quad \frac{d^{n-1}x}{dt^{n-1}}]' \tag{3.2}$$

and n is the number of states, and the prime sign stands for transpose. In state space representation this can be written in the following form:

$$\frac{dx_1}{dt} = x_2$$

$$\vdots$$

$$\frac{dx_n}{dt} = \mathbf{f}(\mathbf{x}) + \mathbf{g}(\mathbf{x})u \tag{3.3}$$

In a matrix representation, this can be written as:

$$\begin{bmatrix} \dot{x}_1 \\ \dot{x}_2 \\ \vdots \\ \dot{x}_n \end{bmatrix} = \begin{bmatrix} x_2 \\ x_3 \\ \vdots \\ \mathbf{f}(\mathbf{x}) \end{bmatrix} + \begin{bmatrix} 0 \\ 0 \\ \vdots \\ \mathbf{g}(\mathbf{x}) \end{bmatrix} u \tag{3.4}$$

3.1.1 Mathematical Tools

In this section some mathematical results from differential geometry on which feedback linearization is based are discussed.

A vector function $\mathbf{f} : \mathbf{R}^n \longrightarrow \mathbf{R}^n$ is a smooth vector field if it has continuous partial derivatives of any required order.

If $h(\mathbf{x})$ is a smooth scalar function of the state $\mathbf{x}$, the gradient of h is denoted by ∇h.

$$\nabla h = \frac{\partial h}{\partial \mathbf{x}}$$

The gradient is represented by a row-vector of elements $(\nabla h)_i = \partial h / \partial x_i$.

Similarly, given a vector field $\mathbf{f}(\mathbf{x})$, the Jacobian of $\mathbf{f}$ is denoted by $\nabla \mathbf{f}$,

$$\nabla \mathbf{f} = \frac{\partial \mathbf{f}}{\partial \mathbf{x}}$$

whose elements are:

$$(\nabla \mathbf{f})_{ij} = \frac{\partial f_i}{\partial x_j}$$

3.1.2 Lie Derivatives and Lie Brackets

Let $h : \mathbf{R}^n \longrightarrow \mathbf{R}^n$ be a smooth scalar function, and $\mathbf{f} : \mathbf{R}^n \longrightarrow \mathbf{R}^n$ be a smooth vector field on $\mathbf{R}^n$, then the Lie derivative of h with respect to $\mathbf{f}$ is a scalar function defined by $L_{\mathbf{f}}h = \nabla h\mathbf{f}$, which is directional derivative of h along the direction of the vector $\mathbf{f}$. A recursive definition can be assigned to higher order Lie derivatives as follows:

$$L_{\mathbf{f}}^0 h = h$$

$$L_{\mathbf{f}}^i h = L_{\mathbf{f}}(L_{\mathbf{f}}^{i-1}h) = \nabla(L_{\mathbf{f}}^{i-1}h)\mathbf{f} \qquad for \quad i = 1, 2, \cdots.$$

Similarly, if $\mathbf{f}$&$\mathbf{g}$ are two vector fields on $\mathbf{R}^n$, the Lie bracket of $\mathbf{f}$&$\mathbf{g}$ is a third vector field defined by:

$$ad_{\mathbf{f}}\mathbf{g} = [\mathbf{f}, \mathbf{g}] = \nabla\mathbf{g}.\mathbf{f} - \nabla\mathbf{f}.\mathbf{g}$$

where ad stands for adjoint.

Diffeomorphism

A diffeormorphism can be used to transform a nonlinear system into another nonlinear system in terms of a new set of states.

A function $\phi : \mathbf{R}^n \longrightarrow \mathbf{R}^n$, defined in a region Ω is called a diffeomorphism if it is smooth, and if its inverse ϕ^{-1} exists and is smooth.

If the Jacobian matrix $\nabla\phi$ is non-singular at a point $x = x_0$ of Ω, then $\phi(x)$ defines a local diffeomorphism in a subregion of Ω. If the region Ω is the whole space $\mathbf{R}^n$, then $\phi(x)$ is called a global diffeomorphism.

Frobenius Theorem

A linear independent set of vector fields $\mathbf{f}_1, \mathbf{f}_2, \cdots, \mathbf{f}_m$ is said to be involutive if the Lie bracket of $\mathbf{f}_i \& \mathbf{f}_j$ can be expressed as a linear combination of $\mathbf{f}_i, i = 1, \cdots, m$. In otherwords, a linearly independent set of vector fields $\mathbf{f}_1, \mathbf{f}_2, \cdots, \mathbf{f}_m$ is said to be involutive if and only if there are scalar functions $\alpha_{ijk}(\mathbf{x})$ such that

$$[\mathbf{f}_i, \mathbf{f}_j](\mathbf{x}) = \sum_{k=1}^{m} \alpha_{ijk}(\mathbf{x}) f_k(\mathbf{x}) \qquad \forall i, j \tag{3.5}$$

A linearly independent set of vector fields $\mathbf{f}_1, \mathbf{f}_2, \cdots, \mathbf{f}_m$ on $\mathbf{R}^n$ is said to be completely integrable if and only if there exists n-m scalar functions $h_1(x), h_2(x), \cdots, h_m(x)$ satisfying the system of partial differential equations:

$$\nabla h_i f_j = 0$$

where $1 \leq i \leq n - m$, $1 \leq j \leq m$, and the gradients ∇h_i are linearly independent. Frobenius theorem states that the set of vector fields $\mathbf{f}, \mathbf{g}$ is completely integrable if and only if it is involutive.

3.1.3 Definition of Input-State Linearization

A single-input nonlinear system of the form,

$$\dot{\mathbf{x}} = \mathbf{f}(\mathbf{x}) + \mathbf{g}(\mathbf{x})u$$

with $\mathbf{f}(\mathbf{x})$ and $\mathbf{g}(\mathbf{x})$ being smooth vector fields on $\mathbf{R}^n$, is said to be input-state linearizable if there exists a region Ω in $\mathbf{R}^n$, a diffeomorphism $\phi : \Omega \longrightarrow \mathbf{R}^n$, and a nonlinear feedback control law,

$$u = \alpha(\mathbf{x}) + \beta(\mathbf{x})v$$

such that the new state variables $\mathbf{z} = \phi(\mathbf{x})$ and the new input v satisfy a linear time-invariant relation,

$$\dot{\mathbf{z}} = A\mathbf{z} + bv$$

where

$$\mathbf{A} = \begin{bmatrix} 0 & 1 & 0 & \cdots & 0 \\ 0 & 0 & 1 & \cdots & 0 \\ \vdots & \vdots & \vdots & \cdots & \vdots \\ 0 & 0 & 0 & \cdots & 1 \\ 0 & 0 & 0 & \cdots & 0 \end{bmatrix} \qquad \mathbf{b} = \begin{bmatrix} 0 \\ 0 \\ \vdots \\ 0 \\ 1 \end{bmatrix} \tag{3.6}$$

The new state $\mathbf{z}$ is called the *linearizing state* and the control law is called the

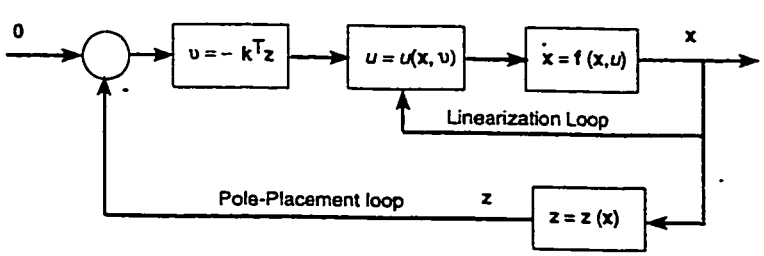

Figure 3.1: Input-State Linearization

linearizing control law.

3.1.4 Conditions for Input-State Linearization

The nonlinear system is input-state linearizable if and only if:

1. The set of vector fields $\{\mathbf{g}, ad_{\mathbf{f}}\mathbf{g}, \cdots ad_{\mathbf{f}}^{n-1}\mathbf{g}\}$ are linearly independent in Ω. Checking this condition, it interprets the controllability condition for the nonlinear system. i.e.

$$rank[\mathbf{g}, ad_{\mathbf{f}}\mathbf{g}, \cdots ad_{\mathbf{f}}^{n-1}\mathbf{g}] = n$$

   For linear systems, the vector fields $\{\mathbf{g}, ad_{\mathbf{f}}\mathbf{g}, \cdots ad_{\mathbf{f}}^{n-1}\mathbf{g}\}$ becomes $[\mathbf{b}, \mathbf{Ab}, \cdots \mathbf{A}^{n-1}\mathbf{b}]$ and therefore their independence is equivalent to the invertibility of the familiar linear controllability matrix.

2. The set $\{\mathbf{g}, ad_{\mathbf{f}}\mathbf{g}, \cdots ad_{\mathbf{f}}^{n-2}\mathbf{g}\}$ is involutive in Ω.

Involutivity means that if one forms the Lie bracket of any pairs of vector fields from the set $\{\mathbf{f}_1, \mathbf{f}_2, \cdots \mathbf{f}_m\}$, then the resulting vector field can be expressed as a linear combination of the original set of vector fields.

If the above two conditions hold, then there exists a nonsingular state transformation, $\mathbf{T}(x)$, defined from $\Omega \longrightarrow \mathbf{R}^n$, which transforms the nonlinear system into the controllable canonical form and a nonlinear feedback control law u which cancels the nonlinear terms in the nth partial differential equation.

The input-state feedback linearization method solves the problem of designing the control input u in order to cancel the nonlinear terms into two steps. First, the nonlinear dynamics is transformed into the controllable canonical form by finding a state transformation T(x). Then, a linearizing input is found in order to transform

the nonlinear system into a linear one.

Example

Consider the control of the mechanism of a single link joint flexible manipulator. Its equations of motion can be easily derived as [52]

$$I\ddot{q}_1 + MgLsinq_1 + k(q_1 - q_2) = 0$$

$$J\ddot{q}_2 - k(q_1 - q_2) = u$$

First, let us put the system's dynamics in a state-space representation. Choosing the state vector as

$$\mathbf{x} = [q_1 \quad \dot{q}_1 \quad q_2 \quad \dot{q}_2]^T$$

the corresponding vector fields f and g can be written as

$$\mathbf{f} = [x_2 \quad -\frac{MgL}{I}sinx_1 - \frac{k}{I}(x_1 - x_3) \quad x_4 \quad \frac{k}{J}(x_1 - x_3)]^T$$

$$\mathbf{g} = [0 \quad 0 \quad 0 \quad \frac{1}{J}]^T$$

Second, let us check the "controllability" and involutivity conditions. The "controllability" matrix is obtained by simple computation as

$$[\mathbf{g} \quad ad_{\mathbf{f}}\mathbf{g} \quad ad^2{}_{\mathbf{f}}\mathbf{g} \quad ad^3{}_{\mathbf{f}}\mathbf{g}] = \begin{bmatrix} 0 & 0 & 0 & -\frac{k}{IJ} \\ 0 & 0 & \frac{k}{IJ} & 0 \\ 0 & -\frac{1}{J} & 0 & \frac{k}{J^2} \\ \frac{1}{J} & 0 & -\frac{k}{J^2} & 0 \end{bmatrix} \tag{3.7}$$

It has rank 4 for $k > 0, IJ < \infty$. Furthermore since the vector fields $\{\mathbf{g} \quad ad_{\mathbf{f}}\mathbf{g} \quad ad^2{}_{\mathbf{f}}\mathbf{g}\}$ are constant, they form an involutive set. Therefore, the system is input-state linearizable.

3.1.5 Limitations of Feedback Linearization

The feedback linearization based on transforming nonlinear systems into a linear one by using state feedback has been successfully applied to a number of practical control problems. It has been used as a controller design tool. However, this method has a number of important limitations:

1. It is only applied for feedback linearizable nonlinear systems which satisfy the "controllability" and involutivity conditions.

2. It is an off-line method.

3. Input-state feedback linearization, in general, is not valid in the whole space.

4. Exact dynamics of the nonlinear plant must be known.

5. The partial differential equations defining the input-state transformation are solved analytically which is not systematic.

3.2 Variable Structure Control

Variable Structure Control is a viable high-speed switching feedback control in which the control is allowed to change its structure, i.e. to switch from one element to another of a set of possible continuous functions of the state variables. VSC utilizes a high-speed switching control law to drive the nonlinear plant's state trajectory onto a specified and user-chosen surface in the state space, called the sliding or switching surface to maintain the plant's state trajectory on that surface for all subsequent time [25].

As the name variable structure control suggests the structure of the control is altered along the switching surfaces in state space with the result that certain desirable properties are achieved. Once the system state reaches the switching plane, the system response thereafter depends only on the gradients of the switching planes and remains insensitive to a class of disturbances and parameter variations [12]. The most distinguished feature of VSC is its ability to result in a very robust control system.

Variable structure control with sliding mode was first proposed in the early 1950s by soviet researchers. In their work, the plant considered was a linear second-order system modelled in canonical form. Later on, VSC has developed into a general design method being examined for a wide spectrum of system types including Nonlinear Systems, MIMO systems, discrete-time models, large-scale and infinite-dimensional systems and stochastic systems. To illustrate the basic philosophy of

the VSC system approach, consider a second-order system [26],

$$\begin{aligned} \dot{x} &= y \\ \dot{y} &= 2y - x + u \\ u &= -\psi x \end{aligned} \tag{3.8}$$

where

$$\psi = \begin{cases} 4, & S(x,y) > 0 \\ -4, & S(x,y) < 0 \end{cases} \tag{3.9}$$

and

$$S(x,y) = x\sigma, \sigma = 0.5x + y. \tag{3.10}$$

A block diagram of the system is shown in Figure 3.2. The variable S(x,y) is the product of two functions, $x = 0$ and $\sigma = 0.5x + y = 0$. The functions describe lines dividing the phase plane into regions where S(x, y) has different sign. The lines $x = 0$ and $\sigma = 0.5x + y = 0$ are often called switching lines and the product of the two, S(x, y), is called a switching function. The set of points in the phase plane where S(x,y)=0 is known as the switching surface.

From the system model, we can see that, the feedback gain ψ switches according to the sign of S(x, y) and hence the performance of the system is defined into several regions of the phase plane by two different mathematical models as shown in Figure 3.3;

In region I, where S(x, y) = x $\sigma > 0$, model is

$$\dot{x} = y$$

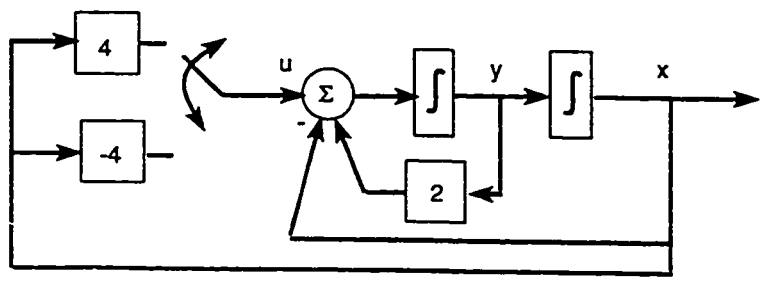

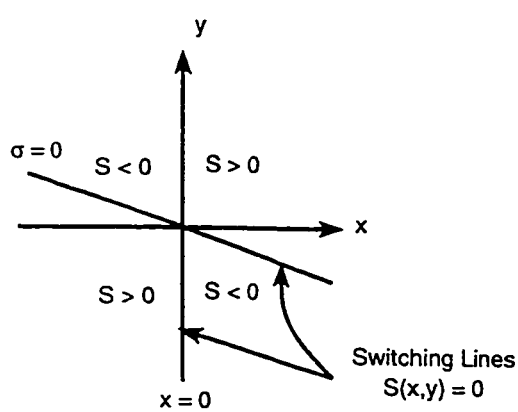

Figure 3.2: A simple VSC example. (a) System Model. (b) Regions defined by the Switching logic

$$\dot{y} = 2y - x + -4x = 2y - 5x$$

In region II, where S(x, y) = x $\sigma < 0$, model is

$$\dot{x} = y$$

$$\dot{y} = 2y - x + 4x = 2y + 3x$$

From the phase plots of the two models, we see that neither structure is asymptotically stable, but the resulting phase plot obtained by combining the two structure shows that there are no unusual motion characteristics on the line $x = 0$ other than possible discontinuities on motion direction.

The line $\sigma = 0$ contains only endpoints of those trajectories coming from both sides of the line and these points constitute a special trajectory along the $\sigma = 0$ line, representing motion called a sliding mode.

Thus, a phase trajectory of this system generally consists of two parts, representing two modes of the system. The first part is the reaching mode, in which the trajectory starting from anywhere on the phase plane moves towards a switching line and reaches the line in finite time. The second part is the sliding mode in which the trajectory assymptotically tends to the origin of the phase plane.

3.2.1 Brief History of VSC

The history of VSC development is marked by three stages of development - the early stage of VSC, the stage of VSC for multi-input linear systems and the stage of complete VSC development.

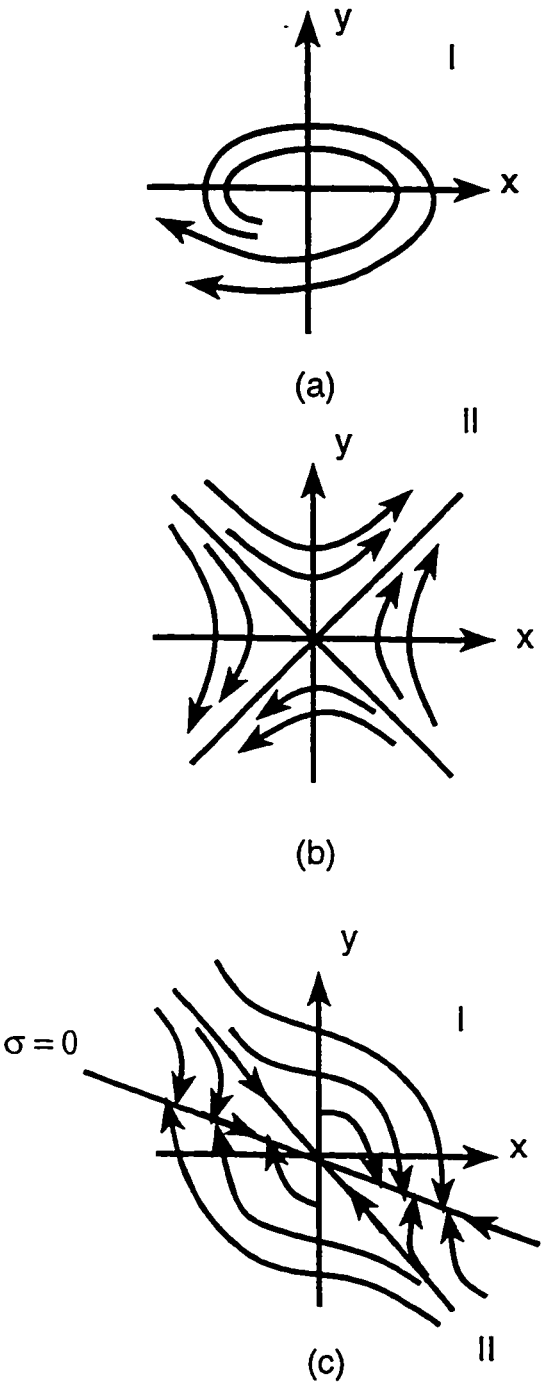

Figure 3.3: Phase Portraits. (a) For System I (b) For System II (c) Overall System

During the early stage, each VSC system was modelled by either a high-order, linear differential equation with a single input:

$$x^{(n)} + a_n x^{(n-1)} + \cdots + a_2 x^{(1)} + a_1 x = bu \tag{3.11}$$

or by its equivalent state space model in controllable canonical form

$$\begin{aligned} \dot{x}_1 &= x_2 \\ \dot{x}_2 &= x_3 \\ &\vdots \qquad (3.12) \\ \dot{x}_n &= -\sum_{i=1}^{n} a_i x_i + bu \qquad (3.13) \end{aligned}$$

The Switching surface was defined in a special quadratic form:

$$S(x) = x_1(c_1 x_1 + c_2 x_2 + \cdots + c_n x_n) \tag{3.14}$$

And the structure of the control was described by:

$$u = \psi x_1$$

where

$$\begin{aligned} \psi &= \alpha \qquad \text{when} \qquad S(x) > 0. \\ &= \beta \qquad \text{when} \qquad S(x) < 0. \end{aligned}$$

α and β are state dependent gains and are chosen to satisfy the reaching condition. Later on, the Variable Structure Systems theory was extended to multi-input, multi-

output(MIMO) systems.

The general system is of the form,

$$\dot{\mathbf{x}} = A\mathbf{x} + B\mathbf{u} \tag{3.15}$$

where dim $\mathbf{x}$ = n and dim $\mathbf{u}$ = m, an m dimensional linear vector switching function S(x) was postulated for the VSC. The control structure for each of the m inputs was described as:

$$\begin{aligned} u_i(\mathrm{x}) &= \psi^+(\mathrm{x}) \qquad \text{when} \qquad S_i(\mathrm{x}) > 0. \\ &= \psi^-(\mathrm{x}) \qquad \text{when} \qquad S_i(\mathrm{x}) < 0. \end{aligned}$$

where $i = 1, 2, \cdots m$ and every scalar switching function $S_i(\mathrm{x})$ was linear in the state variables rather than quadratic.

This VSC theory was overshadowed by the popular linear control system design techniques and the important robustness properties of the VSC system were not yet fully recognized or appreciated.

The present stage represents the period where great attention given to VSC systems. The first is the existence of a general VSC desgin method for complex systems. The second is a full recognition of the property of perfect robustness of a VSC system with respect to system perturbations and disturbances.

3.2.2 Basic Notion of VSS Theory

Consider the nth order linear time-invariant (LTI) system in phase variable form:

$$\begin{aligned} \dot{x}_1 &= x_2 \\ \dot{x}_2 &= x_3 \\ &\vdots \\ \dot{x}_n &= -\sum_{i=1}^{n} a_i x_i + bu \end{aligned} \tag{3.16}$$

Consider the control given by:

$$u(x) = \begin{cases} u^+(x) & \text{if } S(x) > 0 \\ u^-(x), & \text{if } S(x) < 0 \end{cases} \tag{3.17}$$

where $u^+(x) \neq u^-(x)$ and each is chosen to satisfy the reaching condition defined by the pair of inequalities:

$$\begin{aligned} \dot{S}_i > 0, \quad & \text{when} \quad S_i < 0. \\ \dot{S}_i < 0, \quad & \text{when} \quad S_i > 0 \quad i = 1, \cdots, m \end{aligned}$$

or equivalently,

$$S_i \dot{S}_i < 0 \qquad i = 1, \cdots, m$$

The Switching function S(x) is defined by:

$$S(x) = c_1 x_1 + c_2 x_2 + \cdots + c_n x_{n-1} + x_n \tag{3.18}$$

which defines a surface

$$c_1x_1 + c_2x_2 + \cdots + c_nx_{n-1} + x_n = 0$$

in the n dimensional phase space.

Since Eqn. (3.17) is in phase variable form, the coefficients in the switching surface, define the characteristic equation of the sliding mode.

During the sliding mode, $S(x)$ remains zero and thus,

$$x_n = -c_1x_1 - c_2x_2 - \cdots - c_{n-1}x_{n-1}$$

The differential equation of the system in sliding mode becomes:

$$\begin{aligned} \dot{x}_1 &= x_2 \\ \dot{x}_2 &= x_3 \\ &\vdots \\ \dot{x}_{n-1} &= -c_1x_1 - c_2x_2 - \cdots - c_{n-1}x_{n-1} \end{aligned} \tag{3.19}$$

Thus the nth order system behaves like an $(n-1)^{th}$ order system during the sliding mode with the advantage that its dynamics are independent of system parameters. When the states of the system cross the switching surface $S(x) = 0$, and enters the region $S(x) < 0$, the value of $u(x)$ is altered from u^+(x) to u^-(x). The state of the system will immediately recross the switching surface and enter the region $S(x) > 0$ resulting in the value of u(x) being re-altered from u^-(x) to u^+(x). The system state is constrained to remain on the switching surface $S(x) = 0$ by the VSC controller

which oscillates between the values $u^+(x)$ and $u^-(x)$. The condition under which the system state will move toward, reach and slide along the switching surface is called the reaching condition.

3.2.3 Design of VSC

The design of VSC systems consists of two independent stages. The first is the construction of the switching surface so that the original system or plant restricted to the surface responds in a desired manner. There are various design procedures for constructing these surfaces [26].

In the second stage, a VSC system is designed to drive the state of the system from any initial state in state space to reach the switching surface in finite time. This process is called the reaching mode.

Reaching Conditions and the Reaching mode

The condition under which the state will move towards and reach a sliding surface is called a reaching condition. The system trajectory under the reaching condition is called the reaching mode or reaching phase.

Different approches can be used for specifying the reaching condition in the design of VSC systems. They may be designed by a direct switching function (DSF) approach, by a Lyapunov function approach, or by a reaching law approach.

The DSF design approach uses the following reaching condition:

$$\lim_{S(x)\to 0^+} \dot{S}(x) < 0 \quad \text{and} \quad \lim_{S(x)\to 0^-} \dot{S}(x) > 0$$

The Lyapunov function design approach uses the following reaching condition:

$$V(x,t) = S^T(x)S(x) > 0 \qquad \text{where } \dot{V}(x,t) < 0$$

The Reaching law approach uses the following law:

$$\dot{S}(x) = -kS(x) - qsgn(S(x)) \tag{3.20}$$

The reaching law approach not only establishes the reaching condition but also specifies the dynamic characteristics of the system during the reaching phase.

The Control Law

Design of the VSC control law depends on two factors:

- The choice of a sliding mode entering scheme.
- Whether or not the structure of the control law has been prespecified.

Whether the structure of the control is free or preassigned at the outset, the objective is to satisfy a reaching condition.

In the case of free structure of control, the reaching law approach (Eqn. (3.20)) can be used where k and q are positive gains. The term, $-kS(x)$, forces the system state to approach the switching surface faster when | S(x) | is large. The term. $-qsgn(S(x))$, is used to counteract the system parameter variations and external

disturbances present in the system.

In some cases, it is convenient to preassign the structure of the VSC and then determine the vlaues of the controller gains such that the desired reaching law is satisfied. There are two types of preassigned VSC structues. The Relay Control type has the following preassigned structure:

$$u(x) = \begin{cases} K^+ & \text{if } S(x) > 0 \\ K^-, & \text{if } S(x) < 0 \end{cases} \tag{3.21}$$

The values of K^+ and K^- are chosen to satisfy the desired reaching condition.

The linear feedback with switched gains type has the following preassigned structure:

$$u = \psi x$$

where

$$\begin{aligned} \psi_{ij} &= \alpha_{ij} \qquad \text{where} \qquad S_i(\mathrm{x})x_j > 0. \\ &= \beta_{ij} \qquad \text{where} \qquad S_i(\mathrm{x})x_j < 0. \end{aligned}$$

with i=1 to m and j=1 to n and ψ_{ij} is an $m \times n$ matrix and the state dependent gains α and β are chosen to satisfy the desired reaching condition.

3.2.4 Chattering

One of the underlying assumptions in the design and analysis of VSC systems is that the control can be switched from one value to another at infinite speed. But practically, it is impossible to achieve the high switching control that is necessary to most VSC designs. There are several reasons for this. One reason is the presence

of finite time delays for control computation. The second cause is the limitations of physical actuators.

Since it is impossible to switch the control at infinite rate, chattering always occurs in the sliding and steady-state modes of a VSC system. In the steady state, chattering appears as a high-frequency oscillation about the desired equilibrium point and may also serve as a source to excite the unmodeled high frequency dynamics of the system. Since chattering is almost always objectionable, significant research effort has been directed at eliminating or reducing its effects. Two of the main approaches proposed are the Continuation Approach and Tuning the Reaching Law approach.

The Continuation Approach

In many VSC designs, the control contains terms that are relay like in nature. The ideal relay characteristic is practically impossible to implement, so one approach to reduce the chatter is to replace relay control by a saturating continuous approximation. In state space, a *boundary layer* around the switching surface is introduced. Within this boundary layer, the control is chosen to be a continuous approximation of the switching function. An interpretation is that no high-gain control is used near the surface. A consequence of the continuation method is that invariance is lost. The system possesses robustness that is a function of the boundary layer width.

The continuation approach eliminates the high-frequency chattering at the price of losing invariance. A high degree of robustness can still be maintained with a small boundary layer width, but significant delays in the control actuator may dictate the need for a "thicker" boundary layer. In the extreme case, large amplitude

low-frequency oscillation may result and the system may cease to possess any variable structure behavior. The invariance and robustness properties of the system no longer exist.

Tuning the Reaching Law Approach

Chattering can be reduced by tuning parameters q_i and k_i in the reaching law

$$\dot{S}_i = -q_i sgn(S_i) - k_i S_i \qquad i = 1, \cdots, m.$$

Near the switching surface, $s_i \approx 0$, so $\mid \dot{S}_i \mid \approx q_i$. By choosing the gain q_i small, the momentum of the motion will be reduced as the system trajectory approaches the switching surface. As a result, the amplitude of the chatter will be reduced. However, q_i cannot be chosen equal to zero becuase the reaching time would become infinite; the system fails to be a sliding mode control system. A large value for k_i increases the reaching rate when the state is not near the switching surface. In summary, chattering is a hindrance to the widespread use of VSC in many practical control systems. Elimination or reduction of chattering remains an important and challenging problem.

3.2.5 Robustness of VSC

Robustness is one of the most distinguishing properties of VSC systems. For a plant represented by either a linear or nonlinear high-order differential equation, the differential equation of the sliding mode can be entirely independent of effects due to modeling error and external disturbances. Thus the sliding mode is said to be

invariant to modeling error and disturbances. The invariance property requires that certain *matching conditions* be satisfied.

Consider a general linear system of the form

$$\dot{\mathbf{x}} = (\mathbf{A} + \Delta\mathbf{A})\mathbf{x} + \mathbf{B}\mathbf{u} + \mathbf{f}(t) \tag{3.22}$$

where $\Delta\mathbf{A}$ and $\mathbf{f}(\mathrm{t})$ represent the modeling error and external disturbance, respectively. If there exist $\Delta\tilde{\mathbf{A}}$ and $\tilde{\mathbf{f}}$ (t) such that matching conditions

$$\Delta\mathbf{A} = \mathbf{B}\Delta\tilde{\mathbf{A}} \quad \text{and} \quad \mathbf{f}(t) = \mathbf{B}\Delta\tilde{\mathbf{f}}$$

are satisfied, then the sliding mode is invariant. The physical meaning of matching conditions is that all modeling uncertainties and disturbances should enter the system through the control channel.

The same result can be extended to nonlinear systems

$$\dot{\mathbf{x}} = \mathbf{A}(\mathbf{x}) + \Delta\mathbf{A}(\mathbf{x}) + \mathbf{B}(\mathbf{x})\mathbf{u} + \mathbf{f}(x, t) \tag{3.23}$$

For the more general case, where $\mathrm{B}(\mathbf{x})$ is also perturbed

$$\dot{\mathbf{x}} = A(\mathbf{x}) + \Delta A(\mathbf{x}) + B(\mathbf{x})\mathbf{u} + \Delta B(\mathbf{x})\mathbf{u} + \mathbf{f}(t)$$

where $\Delta A(\mathbf{x})$, $\Delta B(\mathbf{x})$ and $\mathbf{f}(t)$ represent the uncertainty and external disturbance, respectively. If there exist $\Delta\tilde{A}$, $\Delta\tilde{B}$ and $\tilde{\mathbf{f}}(t)$ such that matching conditions,

$$\Delta A(\mathbf{x}) = B(\mathbf{x})\Delta\tilde{A}(\mathbf{x})$$

$$\Delta B(\mathbf{x}) = B(\mathbf{x})\Delta\tilde{B}(\mathbf{x})$$

$$\mathbf{f}(t) = B(\mathbf{x})\Delta\tilde{\mathbf{f}}(t)$$

are satisfied for certain $\Delta\tilde{A}$, $\Delta\tilde{B}$ and $\tilde{\mathbf{f}}$, then the sliding mode is invariant.

3.2.6 Attractive Features of VSS

1. VSS is capable of producing robust sysems that are sometimes invariant to plant parameter variations and disturbances. The invariance property requires that specific conditions of matching be satisfied. The physical meaning of matching conditions is that all system parameter variations and external disturbances should enter the system through the control channel only.

2. Another attractive feature of VSS is decoupling the VSC design problem into two independent stages. During the first stage, a sliding mode is created and in the second stage, the desired motion on the slding mode is provided by an appropriate equation designed by the closed-loop eigenvalue placement technique.

3. The system in sliding mode can be described by a dynamic system of lower order than the original system.

4. High speed of response without loss of stability. This is obtained by increasing the gains of the VSC system and by a suitable choice of switching surfaces.

5. Straight forward synthesis of asymptotically stable systems by combining two or more structures which may be unstable on their own.

Chapter 4

Plant Augmentation Methodology

The switching of the control at infinite rate when designing a controller using VSS theory may excite unmodelled high frequency plant dynamics and may jeopardize the system performance. In this chapter, a filtering method is proposed to remove the excessive chatter in the control signal.

Three points are stressed at the outset for Nonlinear Systems [23, 26, 51]:

1. Basic concepts and the fundamental theory of VSC are similar to those for linear systems.

2. The derivation of a control u(x) is similarly simple and straightforward.

3. But the analysis of sliding mode and the search for the corresponding switching function becomes a more difficult problem.

For nonlinear systems, various state transformations are used to put the differential equations of the system in one of several possible canonical forms.

Consider the nonlinear system

$$\dot{\mathbf{x}} = \mathbf{f}(\mathbf{x}, p) + \mathbf{g}(\mathbf{x}, p)u \tag{4.1}$$

where $\mathbf{f}(\mathbf{x}, p)$ and $\mathbf{g}(\mathbf{x}, p)$ are smooth vector fields on R^n and p is a set of uncertain parameters [9]. The expressions for $\mathbf{f}$ and $\mathbf{g}$ are known but the values of the parameters p are unknown. Let us assume that the system is feedback equivalent, under a (local) diffeomorphic coordinate transformation (T) and a nonlinear state feedback input coordinate transformation (S),

$$\mathbf{z} = T(\mathbf{x}, p) \simeq T \tag{4.2}$$

$$u = S(\mathbf{x}, p, v) = \alpha(\mathbf{x}, p) + \beta(\mathbf{x}, p)v \simeq \alpha + \beta v \tag{4.3}$$

to a linear controllable canonical form as described in Chapter 3.

The system is augmented by a pure integrator, which serves as a buffer, so that the chattering appears at the augmented system rather than the original system. By transforming the augmented system model into a controllable canonical form, the coefficients of the switching surface will define the characteristic equation of the sliding mode [58]. The VSC technique is then applied to the augmented plant which consists of the original plant and the pure integrator. This procedure for designing a VSC ensures the stability of the augmented system and reduces the control chattering to a great extent.

After the feedback linearization, now we have a linearized system. The uncertainties and external disturbances can be represented by Δp which can be estimated using

the Luenberger observer. Now, by properly designing the switching surface and estimating the Δp, we can design the controller for the augmented linearized system. Note that $z_{n+1} = v$ where v is the linearizing control and $\mathbf{z}$ is the linearizing state vector. And now, by ensuring that the reaching condition is satisfied and adjusting the magnitude (q) of the signum term such that it neutralizes the effects of system uncertainties and external disturbances, we can obtain the linearizing control signal. And then the original control signal for the nonlinear system, which is a function of the linearizing state vector and the linearizing control, can be obtained.

Firstly, the design of VSC for the unaugmented plant is considered. The linearized system is a LTI which can be augmented with an integrator and a VSC can be developed for the augmented system. The development of the VSC for a SISO (LTI) in canonical form is presented next.

Consider a single-input single-output (LTI) plant [40] with a single input disturbance $f(t)$ represented by the controllable canonical form:

$$\begin{bmatrix} \dot{x}_1 \\ \dot{x}_2 \\ \vdots \\ \dot{x}_n \end{bmatrix} = \begin{bmatrix} 0 & 1 & \cdots & 0 \\ 0 & 0 & \cdots & 0 \\ \vdots & \vdots & \cdots & \vdots \\ -a_1 & -a_2 & \cdots & -a_n \end{bmatrix} \begin{bmatrix} x_1 \\ x_2 \\ \vdots \\ x_n \end{bmatrix} + \begin{bmatrix} 0 \\ 0 \\ \vdots \\ b \end{bmatrix} u + \begin{bmatrix} 0 \\ 0 \\ \vdots \\ d \end{bmatrix} f(t) \qquad (4.4)$$

$$y = \begin{bmatrix} 1 & 0 & \cdots & 0 \end{bmatrix} \begin{bmatrix} x_1 \\ x_2 \\ \vdots \\ x_n \end{bmatrix}$$

The VSC is defined by:

$$u(x) = \begin{cases} u^{+}(x) & \text{if } S(x) > 0 \\ u^{-}(x), & \text{if } S(x) < 0 \end{cases} \tag{4.5}$$

where the switching function S(x) is

$$S(x) = c_1 x_1 + c_2 x_2 + \cdots + x_n \tag{4.6}$$

and defines a surface:

$$c_1 x_1 + c_2 x_2 + \cdots + x_n = 0 \tag{4.7}$$

From the reaching law condition:

$$\dot{S}(x) = -kS(x) - qsgn(S(x)) \tag{4.8}$$

where k and q are positive gains.

Taking the derivative of Eqn. (4.6), we get

$$\dot{S}(x) = c_1 \dot{x}_1 + c_2 \dot{x}_2 + \cdots + \dot{x}_n \tag{4.9}$$

From Eqn. (4), Eqn. (4.8) and Eqn. (4.9), the controller is given by

$$u = -\frac{1}{b}[kS(x) + \sum_{i=1}^{n}(c_{i-1} - a_i)x_i + qsgn(S(x)) + df(t)] \tag{4.10}$$

All quantities are known except f(t). So, replace df(t) by a known quantity f_c, which yields,

$$u = -\frac{1}{b}[kS(x) + \sum_{i=1}^{n}(c_{i-1} - a_i)x_i + qsgn(S(x)) + f_c] \tag{4.11}$$

where, f_c should be chosen to satisfy the reaching condition.

Substituting Eqn. (4) and Eqn. (4.11) into Eqn. (4.9) and simplifying, we get:

$$\dot{S}(x) = -K^{*}S(x) - qsgn(S(x)) - (f_c - df(t)) \tag{4.12}$$

Comparing Eqn. (4.12) to Eqn. (4.8), shows that an additional term, $(f_c - df(t))$ appears in the reaching dynamics due to the arrangement for handling the unknown disturbance $f(t)$.

Assume some priori bounds on $df(t)$, i.e. $f_l(t) \leq df(t) \leq f_u(t)$ where $f_l(t)$ and $f_u(t)$ are the lower and upper boundary limits of df(t). To ensure the reaching condition, f_c should dominate the unknown $df(t)$. Therefore,

When	$S(x) > 0$,	set $f_c = f_u(t)$	to guarantee that $\dot{S}(x) < 0$
When	$S(x) < 0$,	set $f_c = f_l(t)$	to guarantee that $\dot{S}(x) > 0$

Define

$$f_{c_1} = \frac{(f_u(t) + f_l(t))}{2} \quad \text{and} \quad f_{c_2} = \frac{(f_u(t) - f_l(t))}{2}$$

then

$$f_c = (f_{c_1} + f_{c_2} sgn(S(x))) \tag{4.13}$$

The final control law is given by:

$$u = -\frac{1}{b}[kS(x) + qsgn(S(x)) + \sum_{i=1}^{n}(c_{i-1} - a_i)x_i + (f_{c1} + f_{c2}sgn(S(x)))] \tag{4.14}$$

The above VSC design is capable of making the system robust against external disturbances as long as the range of $df(t)$ is known. The conventional approach in designing a VSC system is to set f_c as given in Eqn. (4.13). A large magnitude for f_c results in a robust system over a wide range of disturbances but with a large chattering amplitude.

4.1 Augmenting the plant with an integrator

When the plant is augmented with an integrator (1/s), as shown in Figure 4.1, the chattering appears at the input of the augmented plant rather than the original plant. The state equations after plant augmentation become:

$$\begin{bmatrix} \dot{x}_1 \\ \dot{x}_2 \\ \vdots \\ \dot{x}_n \\ \dot{x}_{n+1} \end{bmatrix} = \begin{bmatrix} 0 & 1 & \cdots & 0 & 0 \\ 0 & 0 & \cdots & 0 & 0 \\ \vdots & \vdots & \cdots & \vdots & \vdots \\ -a_1 & -a_2 & \cdots & -a_n & b \\ 0 & 0 & \cdots & 0 & 0 \end{bmatrix} \begin{bmatrix} x_1 \\ x_2 \\ \vdots \\ x_n \\ x_{n+1} \end{bmatrix} + \begin{bmatrix} 0 \\ 0 \\ \vdots \\ 0 \\ 1 \end{bmatrix} \mathrm{u_a} + \begin{bmatrix} 0 \\ 0 \\ \vdots \\ d \\ 0 \end{bmatrix} \mathrm{f(t)} \tag{4.15}$$

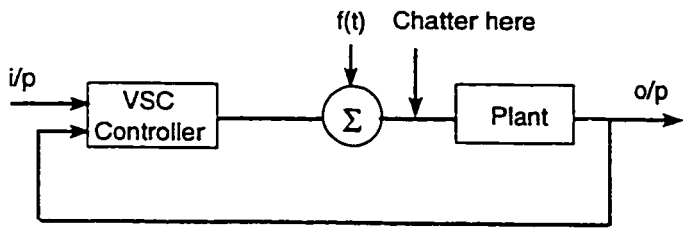

a) Usual VSC System

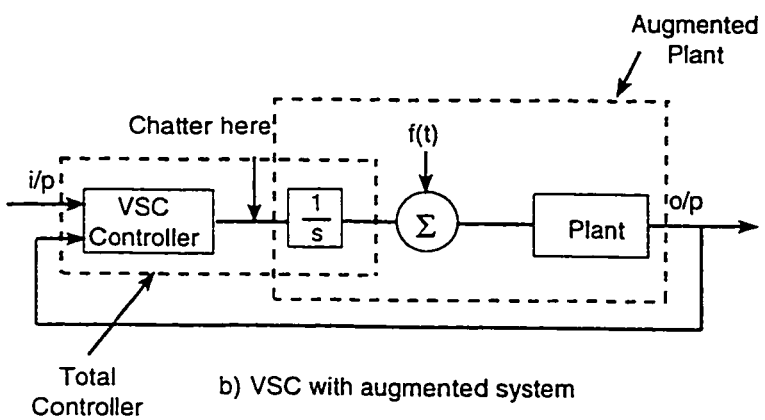

b) VSC with augmented system

Figure 4.1: The augmented plant concept

$$y = \begin{bmatrix} 1 & 0 & \cdots & 0 \end{bmatrix} \begin{bmatrix} x_1 \\ x_2 \\ \vdots \\ x_n \end{bmatrix} \tag{4.16}$$

The switching function now becomes:

$$S(x) = c_1 x_1 + c_2 x_2 + \cdots + c_n x_n + x_{n+1} \tag{4.17}$$

which defines a surface

$$c_1 x_1 + c_2 x_2 + \cdots + c_n x_n + x_{n+1} = 0 \tag{4.18}$$

in the $n+1$ dimensional phase space.

The state equations of Eqn. (4.15) can be transformed into the controllable canon-

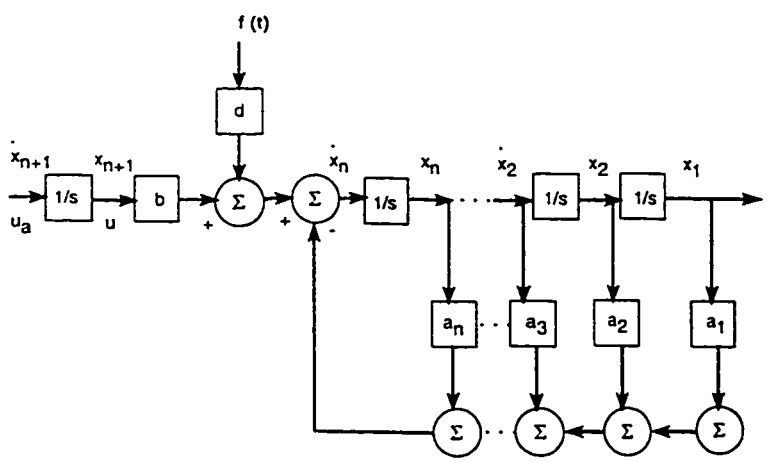

Figure 4.2: Model of the augmented plant with a pure integrator

ical form to yield:

$$\begin{bmatrix} \dot{x}_1 \\ \dot{x}_2 \\ \vdots \\ \dot{x}_n \\ \dot{x}_{n+1} \end{bmatrix} = \begin{bmatrix} 0 & 1 & \cdots & 0 \\ 0 & 0 & \cdots & 0 \\ \vdots & \vdots & \cdots & \vdots \\ 0 & 0 & \cdots & 1 \\ 0 & -a_1 & \cdots & -a_n \end{bmatrix} \begin{bmatrix} x_1 \\ x_2 \\ \vdots \\ x_n \\ x_{n+1} \end{bmatrix} + \begin{bmatrix} 0 \\ 0 \\ \vdots \\ 0 \\ b \end{bmatrix} \mathrm{u_a} + \begin{bmatrix} 0 \\ 0 \\ \vdots \\ d \\ -da_n \end{bmatrix} \mathrm{f(t)} \quad (4.19)$$

The coefficients in the switching function in Eqn. (4.18) define the characteristic equation of the sliding mode and the motion along the sliding surface can be considered as the dynamics of a system with n eigenvalues.

Let $\lambda_1, \lambda_2, \cdots, \lambda_n$ be the desired n eigenvalues with negative real parts. Define

$$S(x) = (D - \lambda_1)(D - \lambda_2) \cdots (D - \lambda_n) x_1 \quad (4.20)$$

where $D = (d/dt)$, then the coefficients of the switching surface can be obtained as:

$$\begin{aligned} c_1 &= (-1)^n (\lambda_1 \lambda_2 \cdots \lambda_n) \\ c_2 &= (-1)^{n-1} (\lambda_2 \lambda_3 \cdots \lambda_n + \lambda_1 \lambda_3 \cdots \lambda_n + \lambda_1 \lambda_2 \cdots \lambda_{n-1}) \\ c_n &= -(\lambda_1 + \lambda_2 + \cdots + \lambda_n) \end{aligned} \quad (4.21)$$

Differentiating Eqn. (4.17), substituting Eqn. (4.19) and equating it to Eqn. (4.8), we get,

$$u_a = -\frac{1}{b}[kS(x) + \sum_{i=1}^{n+1} (c_{i-1} - a_i) x_i + qsgn(S(x)) + (c_n - a_n) df(t)] \quad (4.22)$$

The magnitude of the signum term q is determined by taking the time derivative of Eqn. (4.17) and subsituting the untransformed augmented plant model, Eqn. (4.15), with Eqn. (4.22) into it. This gives

$$\dot{S}(x) = G_1(x) - \frac{1}{b}KS(x) - \frac{q}{b}sgn(S(x)) + c_n(bx_{n+1} + df(t)) - \frac{(c_n - a_n)}{b}df(t) \tag{4.23}$$

where

$$G_1(x) = [\sum_{i=1}^{n-1}(C_i x_{i+1}) - \sum_{i=1}^{n}(c_n a_i)x_i - \sum_{i=1}^{n+1}\frac{(c_{i-1} - a_{i-1})}{b}x_i] \tag{4.24}$$

Note that $x_{n+1} = u$. By appropriate substitution,

$$\dot{S}(x) = G_2(x) - \frac{1}{b}KS(x) + [c_n - \frac{(c_n - a_n)}{b^2}](bu + df(t)) - \frac{q}{b}sgn(S(x)) + \frac{F}{b}$$

where

$$G_2(x) = [\sum_{i=1}^{n-1}(C_i x_{i+1}) - \sum_{i=1}^{n}(c_n a_i + \frac{(c_{i-1} - a_{i-1})}{b}x_i] \tag{4.25}$$

and

$$F = \frac{(c_n - a_n)(1 - b)}{b}df(t) \tag{4.26}$$

To ensure the reaching condition is satisfied, q is chosen so as dominate the unknown F. This will be achieved if

When	$S(x) > 0$,	set	$q > \mid F \mid$	to guarantee that	$\dot{S}(x) < 0$
When	$S(x) < 0$,	set	$q < \mid F \mid$	to guarantee that	$\dot{S}(x) > 0$

If q is set accordingly, then we can have a robust system over a wide range of disturbance with suppressed chattering.

4.2 Adaptive VSC Methodology

Augmenting the system by a pure integrator will reduce the control chattering. The effect of control chattering can further be reduced by adjusting the magnitude of the signum term of Eqn. (4.8) according to the estimated system uncertainties and external disturbances present in the system. An $n+1$ order Luenberger observer is required to estimate these uncertainties and disturbances through the observer reconstruction error equations. Thus, for a nominal case, the magnitude of the signum term is zero and control chattering does not exist. However, when system uncertainties and disturbances are present the magnitude of the signum term is adjusted to be large enough to maintain the robustness of the augmented system. The state equations of a general single-input single-output(LTI) augmented plant,

with system uncertainties and a single input disturbance, are represented by

$$\begin{bmatrix} \dot{x}_1 \\ \dot{x}_2 \\ \vdots \\ \dot{x}_n \\ \dot{x}_{n+1} \end{bmatrix} = \begin{bmatrix} 0 & 1 & \cdots & 0 & 0 \\ 0 & 0 & \cdots & 0 & 0 \\ \vdots & \vdots & \vdots & & \\ -\overline{a}_1 & -\overline{a}_2 & \cdots & -\overline{a}_n & b \\ 0 & 0 & \cdots & 0 & 0 \end{bmatrix} \begin{bmatrix} x_1 \\ x_2 \\ \vdots \\ x_n \\ x_{n+1} \end{bmatrix} + \begin{bmatrix} 0 \\ 0 \\ \vdots \\ 0 \\ 1 \end{bmatrix} u_a + \begin{bmatrix} 0 \\ 0 \\ \vdots \\ d \\ 0 \end{bmatrix} f(t) \quad (4.27)$$

where the system parameter uncertainties are expressed by:

$$\overline{a}_i = (a_i + \Delta a_i) \qquad \text{for i} = 1,2 \cdots \text{n}.$$

with a_i, the nominal value and Δa_i is the uncertainty in $\overline{a}_i$.

The switching function, $S(x)$, is defined by

$$S(x) = c_1 x_1 + c_2 x_2 + \cdots + c_n x_n + x_{n+1} \tag{4.28}$$

which defines a surface

$$c_1 x_1 + c_2 x_2 + \cdots + c_n x_n + x_{n+1} = 0 \tag{4.29}$$

in the $n+1$ dimensional phase plane. The coefficients of the switching surface, Eqn. (4.29), define the characteristic equation of the sliding mode, if Eqn. (4.27) is

described in controllable canonical form. Eqn. (4.27) may be written as

$$\begin{bmatrix} \dot{x}_1 \\ \dot{x}_2 \\ \vdots \\ \dot{x}_n \\ \dot{x}_{n+1} \end{bmatrix} = \begin{bmatrix} 0 & 1 & \cdots & 0 & 0 \\ 0 & 0 & \cdots & 0 & 0 \\ \vdots & \vdots & \cdots & \vdots & \\ -a_1 & -a_2 & \cdots & -a_n & b \\ 0 & 0 & \cdots & 0 & 0 \end{bmatrix} \begin{bmatrix} x_1 \\ x_2 \\ \vdots \\ x_n \\ x_{n+1} \end{bmatrix} + \begin{bmatrix} 0 \\ 0 \\ \vdots \\ 0 \\ 1 \end{bmatrix} \mathrm{u_a} + \begin{bmatrix} 0 \\ 0 \\ \vdots \\ 1 \\ 0 \end{bmatrix} \Delta \mathrm{p} \quad (4.30)$$

where

$$\Delta p = -\sum_{i=1}^{n} \Delta a_i x_i + df(t) \quad (4.31)$$

The controllable canonical form of Eqn. (4.27) is

$$\begin{bmatrix} \dot{x}_1 \\ \dot{x}_2 \\ \vdots \\ \dot{x}_n \\ \dot{x}_{n+1} \end{bmatrix} = \begin{bmatrix} 0 & 1 & \cdots & 0 \\ 0 & 0 & \cdots & 0 \\ \vdots & \vdots & \cdots & \vdots \\ 0 & 0 & \cdots & 0 \\ 0 & -a_1 & \cdots & -a_n \end{bmatrix} \begin{bmatrix} x_1 \\ x_2 \\ \vdots \\ x_n \\ x_{n+1} \end{bmatrix} + \begin{bmatrix} 0 \\ 0 \\ \vdots \\ 0 \\ b \end{bmatrix} \mathrm{u_a} + \begin{bmatrix} 0 \\ 0 \\ \vdots \\ 1 \\ -a_n \end{bmatrix} \Delta \mathrm{p} \quad (4.32)$$

The corresponding Luenberger Observer State equations are represented by:

$$\begin{bmatrix} \dot{\hat{x}}_1 \\ \dot{\hat{x}}_2 \\ \vdots \\ \dot{\hat{x}}_n \\ \dot{\hat{x}}_{n+1} \end{bmatrix} = \begin{bmatrix} 0 & 1 & \cdots & 0 & 0 \\ 0 & 0 & \cdots & 0 & 0 \\ \vdots & \vdots & \cdots & \vdots & \\ -a_1 & -a_2 & \cdots & -a_n & b \\ 0 & 0 & \cdots & 0 & 0 \end{bmatrix} \begin{bmatrix} \hat{x}_1 \\ \hat{x}_2 \\ \vdots \\ \hat{x}_n \\ \hat{x}_{n+1} \end{bmatrix} + \begin{bmatrix} 0 \\ 0 \\ \vdots \\ 0 \\ 1 \end{bmatrix} \mathrm{u_a} + \begin{bmatrix} g_1 \\ g_2 \\ \vdots \\ g_n \\ g_{n+1} \end{bmatrix} \mathrm{e_1} \quad (4.33)$$

The Luenberger Observer is basically an image of the plant model with additional input [32] [31]. This additional input is proportional to the error in observed output as is defined by e_1. The Luenberger Observer has its inputs and the outputs of the system whose state is approximated and has a state vector that is linearly related to the desired approximation [57]. Since the Luenberger observer is depedent on

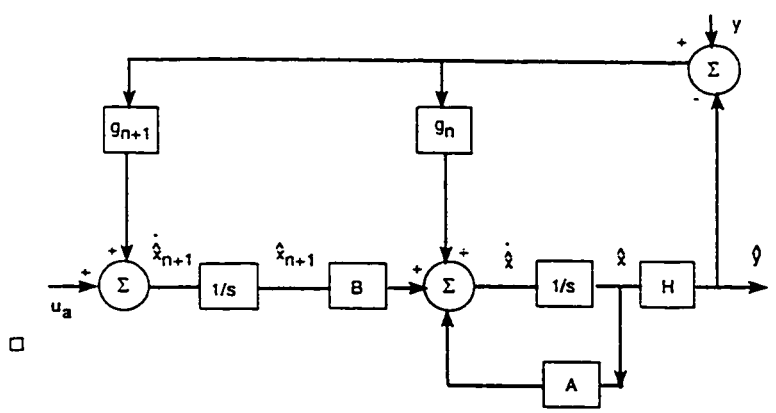

Figure 4.3: Block diagram of the Luenberger Observer

the plant model, system parametric uncertainties and external disturbances can be estimated by the observer reconstruction error defined as $e_i = x_i - \hat{x}_i$; $i = 1, 2, \cdots n$. So, subtracting Eqn. (4.27) from Eqn. (4.33), we get the observer-error

state equations as

$$\begin{bmatrix} \dot{e}_1 \\ \dot{e}_2 \\ \vdots \\ \dot{e}_n \\ \dot{e}_{n+1} \end{bmatrix} = \begin{bmatrix} -g_1 & 1 & \cdots & 0 & 0 \\ -g_2 & 0 & \cdots & 0 & 0 \\ \vdots & \vdots & \cdots & \vdots & \\ -(a_1+g_n) & -a_2 & \cdots & -a_n & b \\ -g_{n+1} & 0 & \cdots & 0 & 0 \end{bmatrix} \begin{bmatrix} e_1 \\ e_2 \\ \vdots \\ e_n \\ e_{n+1} \end{bmatrix} + \begin{bmatrix} 0 \\ 0 \\ \vdots \\ 1 \\ 0 \end{bmatrix} \Delta \mathrm{p} \tag{4.34}$$

Thus,

$$\dot{e}_n = -g_n e_1 - \sum_{i=1}^{n} a_i e_i + b e_{n+1} + \Delta p \tag{4.35}$$

or

$$\Delta p = g_n e_1 + \sum_{i=1}^{n} a_i e_i + \dot{e}_n - b e_{n+1} \tag{4.36}$$

Figure 4.4 shows how system uncertainties and external disturbances are estimated by augmenting the original system by a pure integrator and by a Luenberger observer.

4.2.1 Design of Adaptive VSC

The VSC technique is applied to the augmented plant which consists of the original plant and the pure integrator as shown in Figure 4.1. The VSC is determined directly from the reaching law method,

$$\dot{S}(x) = -kS(x) - qsgn(S(x)) \tag{4.37}$$

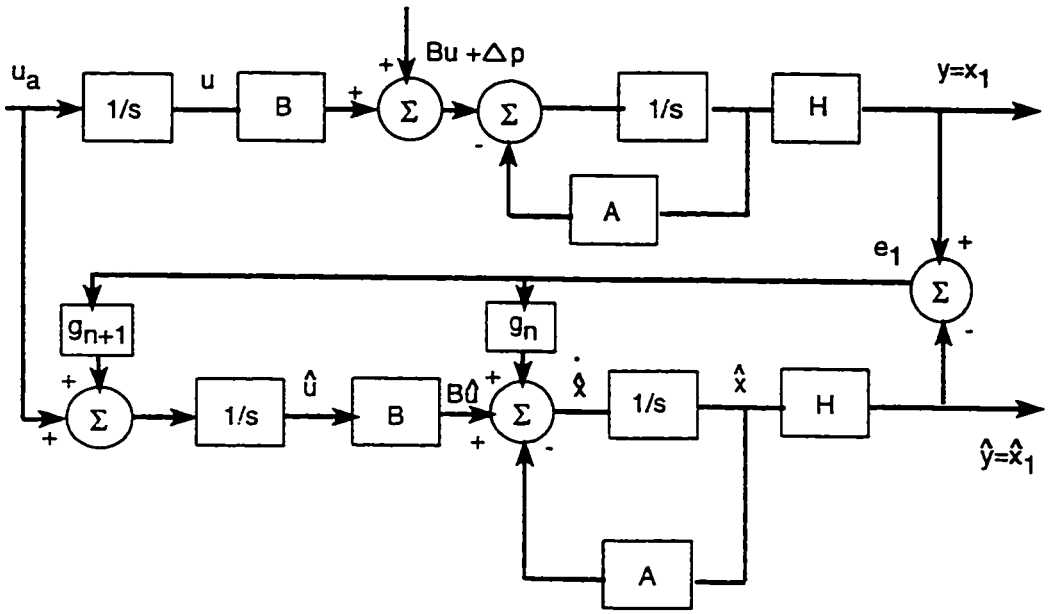

Figure 4.4: Block diagram of the augmented system along with n+1 order Luenberger Observer

where k and q are positive gains.

To design the VSC system, one proceeds by taking the time derivative of Eqn. (4.6), which gives,

$$\dot{S}(x) = c_1\dot{x}_1 + c_2\dot{x}_2 + \cdots + c_n\dot{x}_n + \dot{x}_{n+1} \tag{4.38}$$

Equating Eqn. (4.8) and Eqn. (4.38), substituting Eqn. (4.32) into it, and then solving for the control u_a yields

$$u_a = -\frac{1}{b}[kS(x) + \sum_{i=1}^{n+1}(c_{i-1} - a_{i-1})x_i + qsgn(S(x)) + (c_n - a_n)\Delta p] \tag{4.39}$$

To make sure that the reaching condition is always satisfied, substitute Eqn. (4.32) and Eqn. (4.39) into Eqn. (4.9), to get

$$\dot{S}(x) = G_2(x) - \frac{1}{b}[kS(x) - (c_n - (\frac{(c_n - a_n)}{b})(bu + \Delta p) \\ +qsgn(S(x)) - F\Delta p]$$

where

$$G_2(x) = \sum_{i=1}^{n-1}(C_i x_{i+1}) - \sum_{i=1}^{n}(c_n a_i + \frac{(c_{i-1} - a_{i-1})}{b} x_i] \tag{4.40}$$

$$F = \frac{(c_n - a_n)(1 - b)}{b} \tag{4.41}$$

Note that $x_{n+1} = u$.

The reaching condition is always satisfied as long as the magnitude of the signum term term q dominates the uncertainty. The magnitude of the signum term is chosen as:

$$q = z \mid F\Delta p \mid \tag{4.42}$$

where z is a positive constant which is used to make q just large enough to handle and neutralize the effects of system uncertainties and external disturbances.

In this way, the reaching condition is satisfied and we can adjust the magnitude(q) of the signum term such that it neutralizes the effects of system uncertainties and external disturbances. And we can obtain the linearizing control signal for the nonlinear system. The original control signal for the nonlinear system (U_{org}), which is a function of the linearizing state vector and the linearizing control can be obtained.

The above scheme is summarized as shown in Figure 4.5. But the linearizing control

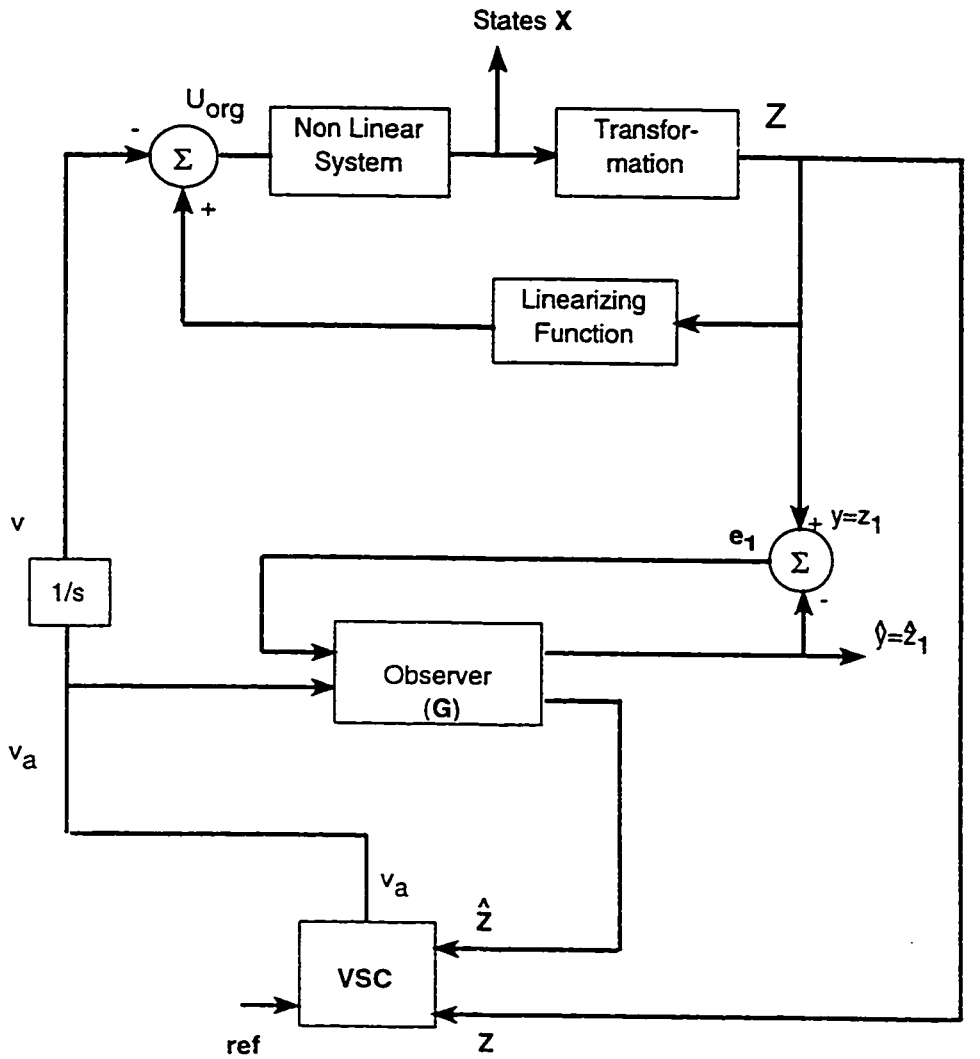

Figure 4.5: Proposed Scheme(States of the NL system are Accessible.)

requires completely accessible states. This does not happen very often in practice. A state observer can be designed to implement the linearizing control law with the observer estimates. But even though the observer may be a 'good' and fast one, some instabilities may appear. When the states of the nonlinear system are not accessible, we have to introduce a nonlinear observer to reconstruct the states of the

nonlinear system and proceed in the same way as in the case of accessible states. To this end, we use the idea of Solsona et al. [36] for designing the nonlinear observer. This approach guarantees the stability of the whole system i.e. the plant plus observer if state feedback control is used. This scheme is summarized as shown in Figure 4.6

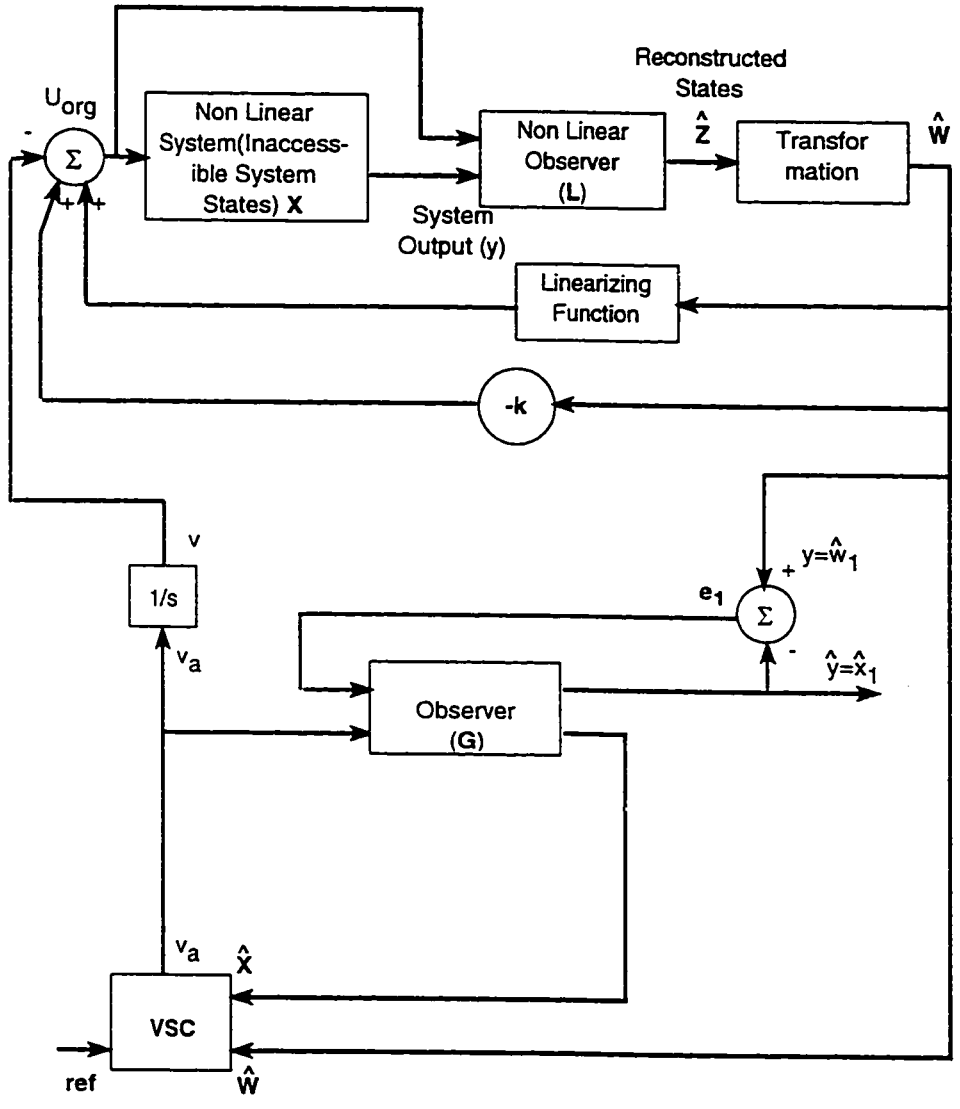

Figure 4.6: Proposed Scheme(States of the NL system are not Accessible.)

4.2.2 Inaccessible States case

When the states of the nonlinear system are not accessible, then the linearizing feedback law can be implemented by designing a nonlinear observer and using the state estimates for feedback.

Now consider the SISO nonlinear system [36],

$$\dot{\mathbf{x}} = \mathbf{f}(\mathbf{x}) + \mathbf{g}(\mathbf{x})u \tag{4.43}$$

$$y = h(x) \tag{4.44}$$

When we linearize this system, the linearizing state feedback law, $u = \alpha(\mathbf{x}) + \beta(\mathbf{x})\mathbf{v}$ requires completely accessible states. This does not happen very often. We may design a state obsrever and implement the feedback law with the observer estimates. But this may lead to instability of the whole system i.e. the plant plus observer. So, we have to set proper sufficient condition that makes possible the stabilization of the whole sytem: i.e. the plant plus observer.

The above nonlinear system can be linearized through coordinate transformation and nonlinear feedback law.

So, the system is given by

$$\dot{\mathbf{z}} = A\mathbf{z} + bv + \Delta p \tag{4.45}$$

$$y = cz \tag{4.46}$$

where Δp is the uncertainty in the parameters of the nonlinear system and

$$\mathbf{A} = \begin{bmatrix} 0 & 1 & 0 & \cdots & 0 \\ 0 & 0 & 1 & \cdots & 0 \\ \vdots & \vdots & \vdots & \cdots & \vdots \\ 0 & 0 & 0 & \cdots & 1 \\ 0 & 0 & 0 & \cdots & 0 \end{bmatrix} \qquad \mathbf{b} = \begin{bmatrix} 0 \\ 0 \\ \vdots \\ 0 \\ b_1 \end{bmatrix} \tag{4.47}$$

The observer is of the form

$$\dot{\hat{\mathbf{z}}} = A\hat{\mathbf{z}} + bv + \Delta p + \mathbf{L}(y - \hat{y}) \tag{4.48}$$

$$\hat{y} = c\hat{z} \tag{4.49}$$

with $\mathbf{G} = [l_1 \cdots l_n]^T$, the vector of observer gains. The error ($e = z - \hat{z}$) dynamics are given by

$$\dot{e} = (A - \mathbf{L}c)e$$

An observerable pair (c, A) implies that $\mathbf{L}$ may be designed so that $(A - \mathbf{L}c)$ is a stability matrix. Now for both systems to be in comparable coordinates, $\hat{z}$ must be transformed into $\hat{w} = \phi(\hat{z})$ and feed $u = \alpha(\phi(\hat{z})) + \beta(\phi(\hat{z}))v$ back to the input of the plant, to complete the 'linearization'. The observer must also undergo the previous

feedback. Hence the whole feedback system, plant plus observer is given by

$$\dot{\mathbf{W}} = \begin{bmatrix} 0 & 1 & \cdots & 0 & 0 & 0 & 0 & \cdots & 0 \\ 0 & 0 & \cdots & 0 & 0 & 0 & 0 & \cdots & 0 \\ \vdots & \vdots & \cdots & \vdots & \vdots & \vdots & \vdots & \cdots & \vdots \\ 0 & 0 & \cdots & 1 & 0 & 0 & 0 & \cdots & 0 \\ 0 & 0 & \cdots & 0 & 0 & 0 & 0 & \cdots & 0 \\ l_1 & 0 & \cdots & 0 & -l_1 & 1 & 0 & \cdots & 0 \\ l_2 & 0 & \cdots & 0 & -l_2 & 0 & 1 & \cdots & 0 \\ \vdots & \vdots & \cdots & \vdots & \vdots & \vdots & \vdots & \cdots & \vdots \\ l_{n-1} & 0 & \cdots & 0 & -l_{n-1} & 0 & 0 & \cdots & 1 \\ l_n & 0 & \cdots & 0 & -l_n & 0 & 0 & \cdots & 0 \end{bmatrix} \mathbf{W} + \begin{bmatrix} 0 \\ 0 \\ \vdots \\ 0 \\ 1 \\ \cdots \\ 0 \\ 0 \\ \vdots \\ 0 \\ 1 \end{bmatrix} \mathrm{v} + \begin{bmatrix} 0 \\ 0 \\ \vdots \\ 0 \\ 1 \\ \cdots \\ 0 \\ 0 \\ \vdots \\ 0 \\ 1 \end{bmatrix} \Delta \mathrm{p} \quad (4.50)$$

with $\mathbf{W} = [w_1 \quad w_2 \quad \cdots \quad w_n \quad \hat{w}_1 \quad \hat{w}_2 \quad \cdots \quad \hat{w}_n]^T$.

If we feedback the whole system with $v = -k\hat{w}$, the matrix of the linear part becomes,

$$J = \begin{bmatrix} A & -bk \\ Lc & A - Lc - bk \end{bmatrix} \quad (4.51)$$

where $k = [k_1 \cdots k_n]$

Because the pair (A, b) is controllable and the pair (c, A) is observable, there exist constant matrices k and $\mathbf{L}$ such that the eigenvalues of J are, a bit far from the $j\omega$ axis, in the left half-plane, i.e. J is a stability matrix.

Thus the whole system, nonlinear plant plus the observer, remains stable. This is true for the $v = -k\hat{w}$ case [36] but not necessarily for the VSC controller.

4.2.3 Replacing the integrator with Low Pass Filter

The insertion of a 1st-order low-pass filter ahead of the plant was originally suggested by Zinober et al. [3]. The low-pass filter is not considered as a part of the system during the design process of the VSC.

The design procedure of Adaptive VSC can also be extended to include systems augmented with 1st-order low-pass filters. Here we consider the low-pass filter as a

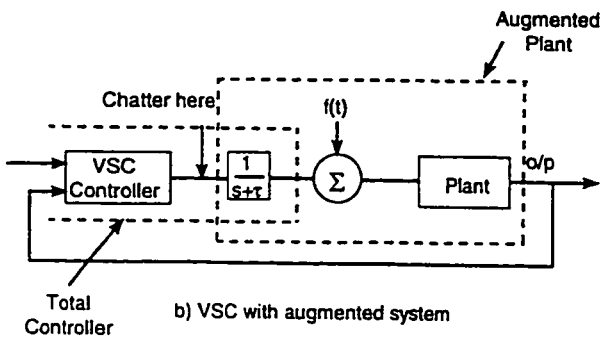

Figure 4.7: Integrator replaced with LPF

part of the system as shown in Figure 4.7 and design the controller. The augmented plant is given by

$$\begin{bmatrix} \dot{x}_1 \\ \dot{x}_2 \\ \vdots \\ \dot{x}_n \\ \dot{x}_{n+1} \end{bmatrix} = \begin{bmatrix} 0 & 1 & \cdots & 0 & 0 \\ 0 & 0 & \cdots & 0 & 0 \\ \vdots & \vdots & \cdots & \vdots & \vdots \\ -a_1 & -a_2 & \cdots & -a_n & b \\ 0 & 0 & \cdots & 0 & -\frac{1}{\tau} \end{bmatrix} \begin{bmatrix} x_1 \\ x_2 \\ \vdots \\ x_n \\ x_{n+1} \end{bmatrix} + \begin{bmatrix} 0 \\ 0 \\ \vdots \\ 0 \\ \frac{1}{\tau} \end{bmatrix} \mathrm{u_a} + \begin{bmatrix} 0 \\ 0 \\ \vdots \\ 1 \\ 0 \end{bmatrix} \Delta \mathrm{p} \quad (4.52)$$

where τ is the time constant. And Δp is the uncertainty in the system. Now, following the same procedure as in the case of integrator, an adaptive VSC can be designed.

Chapter 5

Simulation Results

The performance of the proposed scheme will be investigated and an extensive simulation study will be performed in this chapter.

5.1 Example 1

Consider a Nonlinear System as shown below:

$$\begin{aligned} \dot{x}_1 &= x_2 + sin(x_1) \\ \dot{x}_2 &= a_1 U_{org} + a_2 x_1^2 \end{aligned} \tag{5.1}$$

Let $a_1 = 2$ and $a_2 = 10$ and let the parameters a_1 and a_2 be perturbed by Δa_1 and Δa_2, respectively.

Consider the new set of state variables,

$$z_1 = x_1$$

$$z_2 = x_2 + sinx_1 \tag{5.2}$$

then, the new state equations are

$$\begin{aligned} \dot{z_1} &= z_2 \\ \dot{z_2} &= a_2 z_1^2 + z_2 cos z_1 + a_1 U_{org} + \Delta p \end{aligned} \tag{5.3}$$

where Δp is the Uncertainty. The nonlinearities can be cancelled by the control law of the form

$$U_{org} = -\frac{1}{a_1}(bv - a_2 z_1^2 - z_2 cos z_1) \tag{5.4}$$

where v is an equivalent input to be designed i.e. the linearizing control from the original control signal for the nonlinear system may be obtained, leading to a linear input-state relation

$$\begin{aligned} \dot{z_1} &= z_2 \\ \dot{z_2} &= bv + \Delta p \end{aligned} \tag{5.5}$$

After Linearization, the linearized system in state space representation is given by:

$$\begin{bmatrix} \dot{z_1} \\ \dot{z_2} \end{bmatrix} = \begin{bmatrix} 0 & 1 \\ 0 & 0 \end{bmatrix} \begin{bmatrix} z_1 \\ z_2 \end{bmatrix} + \begin{bmatrix} 0 \\ b \end{bmatrix} v + \begin{bmatrix} 0 \\ 1 \end{bmatrix} \Delta p \tag{5.6}$$

where

$$\Delta p = \Delta a_2 x_1^2 + \Delta a_1 U_{org} + f(t) \tag{5.7}$$

Here $f(t) = 5sin(2\pi t)$ is the external disturbance.

When the system is augmented by an integrator, the canonical controllable form of the augmented linearized system is given by:

$$\begin{bmatrix} \dot{z_1} \\ \dot{z_2} \\ \dot{z_3} \end{bmatrix} = \begin{bmatrix} 0 & 1 & 0 \\ 0 & 0 & 1 \\ 0 & 0 & 0 \end{bmatrix} \begin{bmatrix} z_1 \\ z_2 \\ z_3 \end{bmatrix} + \begin{bmatrix} 0 \\ 0 \\ b \end{bmatrix} v_a + \begin{bmatrix} 0 \\ 1 \\ 0 \end{bmatrix} \Delta p \tag{5.8}$$

Note that $z_3 = v$. The switching function of the augmented system is

$$S(z) = 902.25 z_1 + 60 z_2 + z_3 \tag{5.9}$$

where the coefficients of the S(x) are chosen according to

$$\begin{aligned} c_1 &= -(\lambda_1 \lambda_2) \\ c_2 &= -(\lambda_1 + \lambda_2) \end{aligned} \tag{5.10}$$

where λ_1 and λ_2 represent the desired closed-loop eigenvalues which are chosen as

The desired eigenvalues are

$$\lambda_{1,2} = -30 \pm j1.5 \tag{5.11}$$

The augmented control law is given by:

$$v_a = -(\frac{1}{30})[10S(z) + 902.5z_2 + 60z_3 + qsgn(S(z))] \tag{5.12}$$

Here b = 30 and k = 10. And q is given by:

$$q = z \mid \frac{(c2 - a2)(1 - b)}{b} \mid \Delta p \tag{5.13}$$

where z =30

Since the unknown system uncertainty $(\Delta a_2 z_1^2 + \Delta a_1 U_{org})$ and the external distrubance $f(t)$ are included in Δp, the magnitude of the signum term, q, in the VSC system is adjusted according to Δp. As seen from Equation 5.13, q will be large enough to maintain the robustness of the system against system uncertainties and external disturbance. When these unknown uncertainties and disturbance are absent, the magnitude of the signum term is zero and chattering does not exist.

The Luenberger Observer matrix, **G** is synthesized by ITAE Butterworth standard forms for closed-loop responses for optimal performance indices. The eigenvalues of the $\mathbf{A} - \mathbf{GH}$ matrix are determined by the characteristic polynomial

$$\mid sI - (A - GH) \mid = s^3 + 2\omega_0 s^2 + 2\omega_0^2 s + \omega_0^3 \tag{5.14}$$

where $\omega_0 = 2$. The elements of the matrix G are

$$g_1 = 2\omega_0 \quad and \quad g_2 = 2\omega_0^2 \tag{5.15}$$

$$g_3 = \omega_0^3/b \tag{5.16}$$

$$G = [4 \quad 8 \quad 8/30]$$

For inaccessible states of the Nonlinear System case, an Observer is designed for the nonlinear System as mentioned earlier and the same two cases are repeated. The Observer for this Nonlinear system is given by:

$$\begin{aligned} \dot{\hat{x}}_1 &= \hat{x}_2 + sin(x_1) + l_1(x_1 - \hat{x}_1) \\ \dot{\hat{x}}_2 &= a_1 U_{org} + a_2 x_1^2 + l_2(x_1 - \hat{x}_1) \end{aligned} \tag{5.17}$$

The output of the Nonlinear system is $y = x_1$ with $G_1 = [l_1 \quad l_2]^T$, the vector of observer gains. Following the procedure of designing the observer for a Nonlinear system as mentioned in Chapter 4, the observer gains vector, G can be taken as $\mathbf{L} = [10 \quad 10]^T$ so that the necessary and sufficient conditions for the stability of the nonlinear system plus its observer are satisfied with the feedback controller. Simulations of the closed-loop augmented system were performed using matlab.

5.1.1 Results

- **Case 1:** When the two parameters a_1 and a_2 have sinusoidal parameter uncertainty with 50% variations i.e. $\Delta a_1 = sin(2\pi t)$ and $\Delta a_2 = 5sin(2\pi t)$. Ref Figure 5.5.

- **Case 2:** When the two parameters a_1 and a_2 have sinusoidal Parameter Uncertainty with 50% variations and an external disturbance $f(t) = 5sin(2\pi t)$ is considered. Ref Figure 5.6.

- Figure 5.1 and Figure 5.2 show the simulation results when the plant is not augmented with an integrator. From these simulation results we can see that there is a large of chattering appearing in the linearizing control(v) as well as the control input signal to the original nonlinear plant. And in addition to that, we can see the chatter appearing in the states also.

- Figure 5.3 shows the simulation results for Example 1. when the states of the system are accessible and only the constant parameter uncertainties are considered. And Figure 5.4 shows the simulation results when both constant parameter uncertainties and external disturbance are considered.

- Figure 5.5 shows the simulation results for Example 1. when the states of the system are accessible and only the sinusoidal parameter uncertainties are taken into consideration.

- Figure 5.5 (a) shows the estimation of the system parameter uncertainties, $\Delta p = (\Delta a_2 x_1^2 + \Delta a_1 U_{org})$, which is done by Eqn. 4.36.

- Figure 5.5 (b) shows the input to the augmented linearized system and Figure 5.5 (d) shows the control, which is the input to the original system. Here we can see the magnitude of chatter at the input of the augmented linearized system but the presence of chatter in the control signal of the original nonlinear system is very much suppressed.

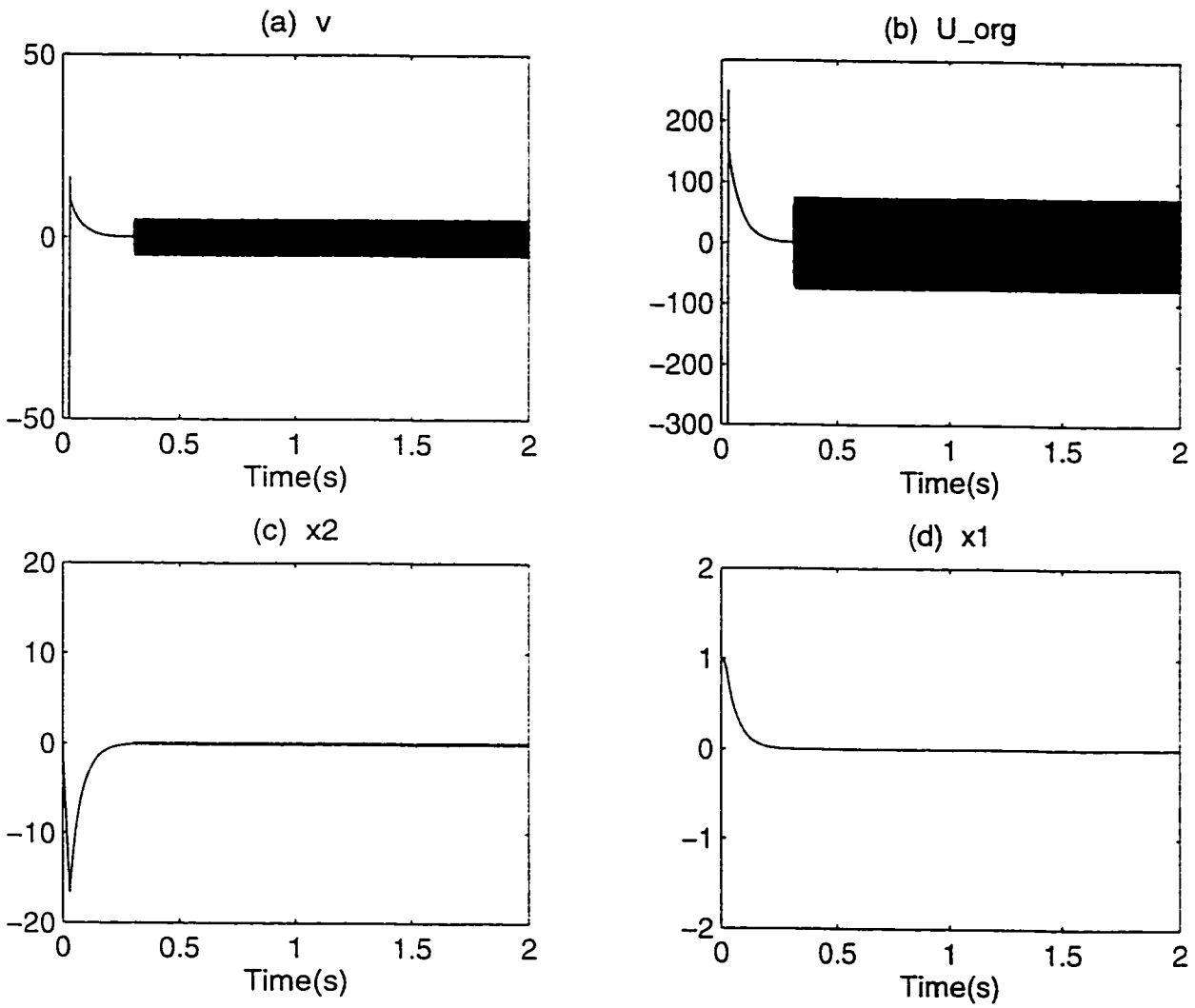

Figure 5.1: Example 1. Accessible States: Const. Par. Uncertainty (Without Integrator)

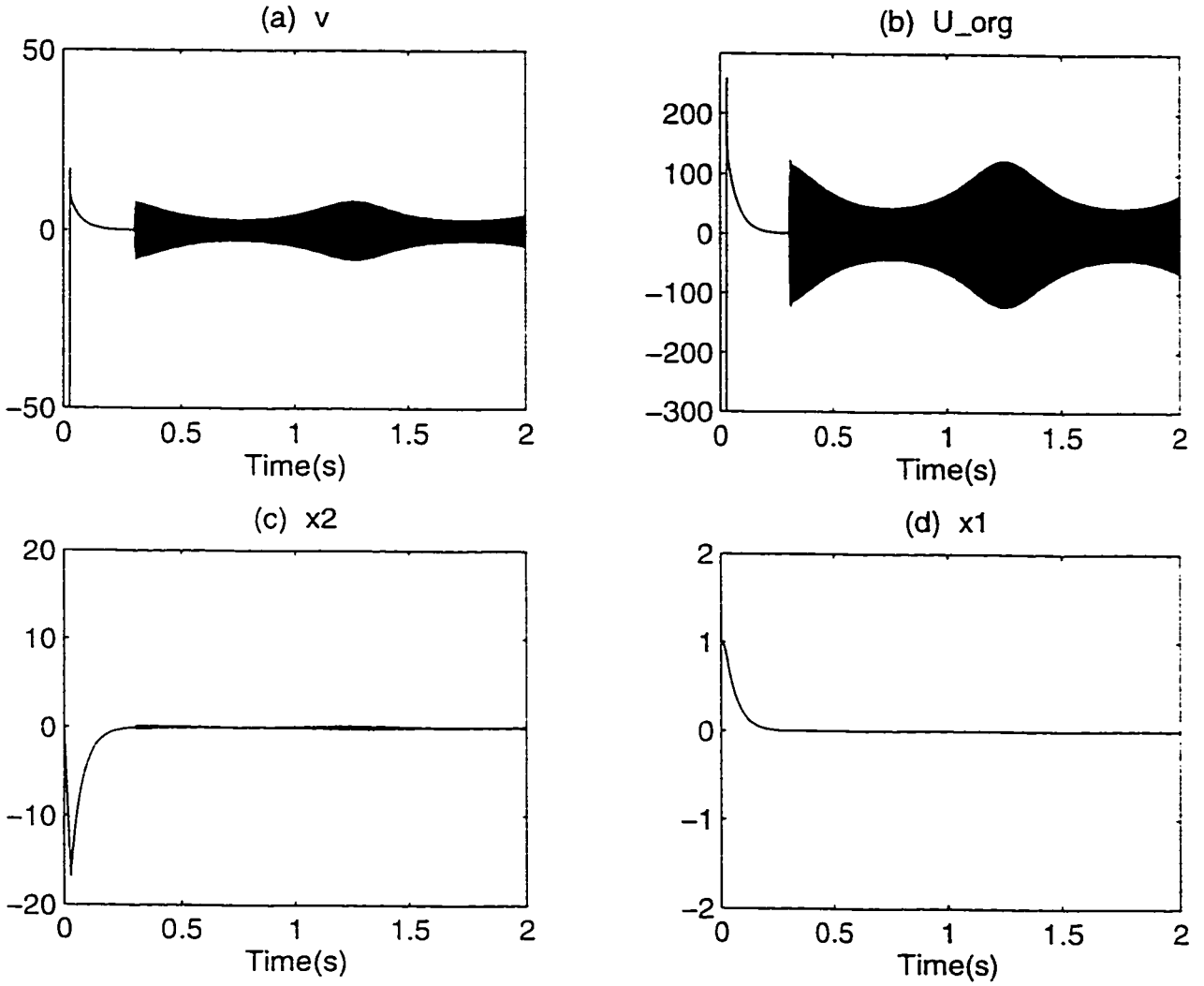

Figure 5.2: Example 1. Accessible States: Sine par. Uncertainty. (Without Integrator)

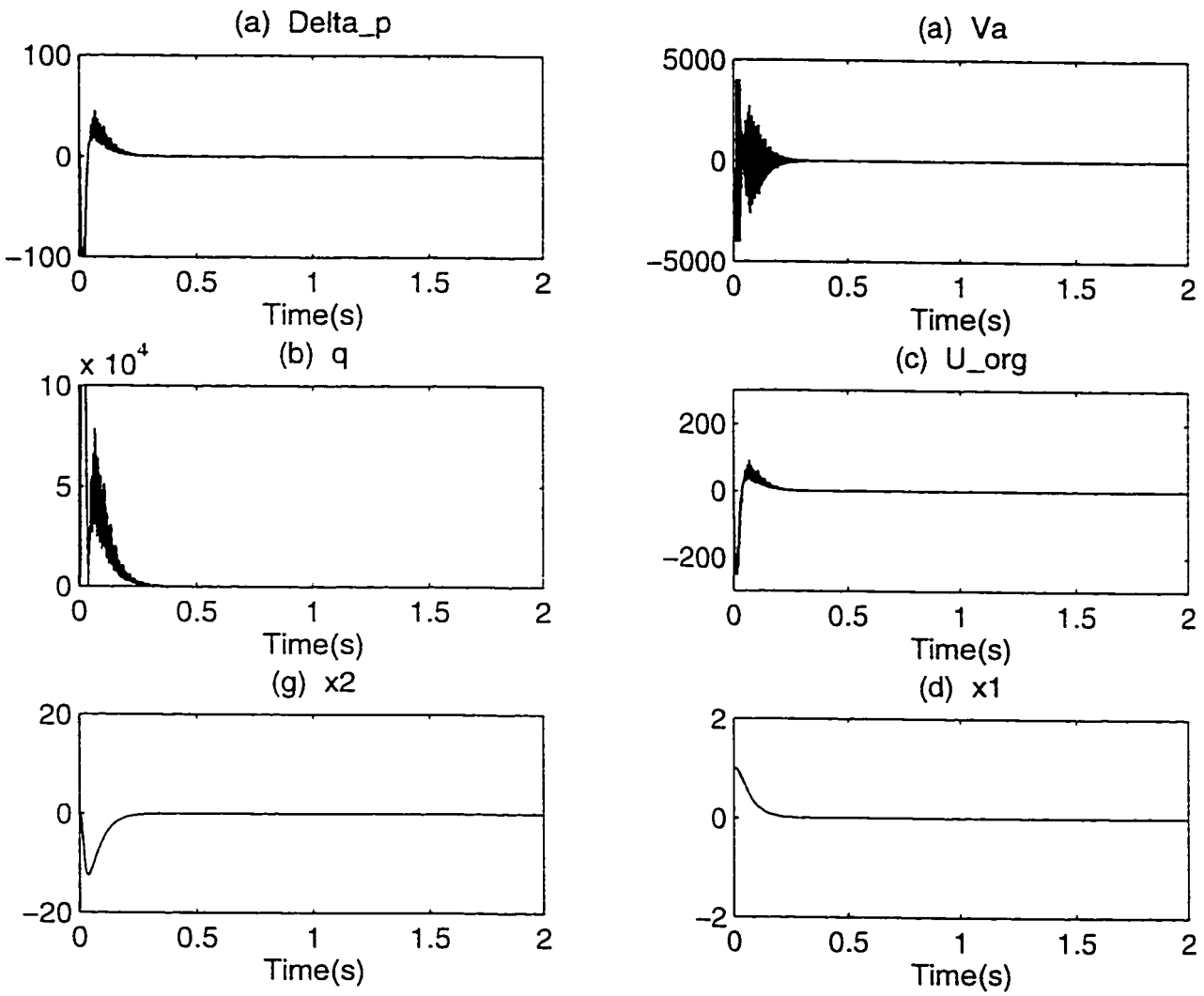

Figure 5.3: Example 1. Accessible States: Only Constant Par. Uncertainty

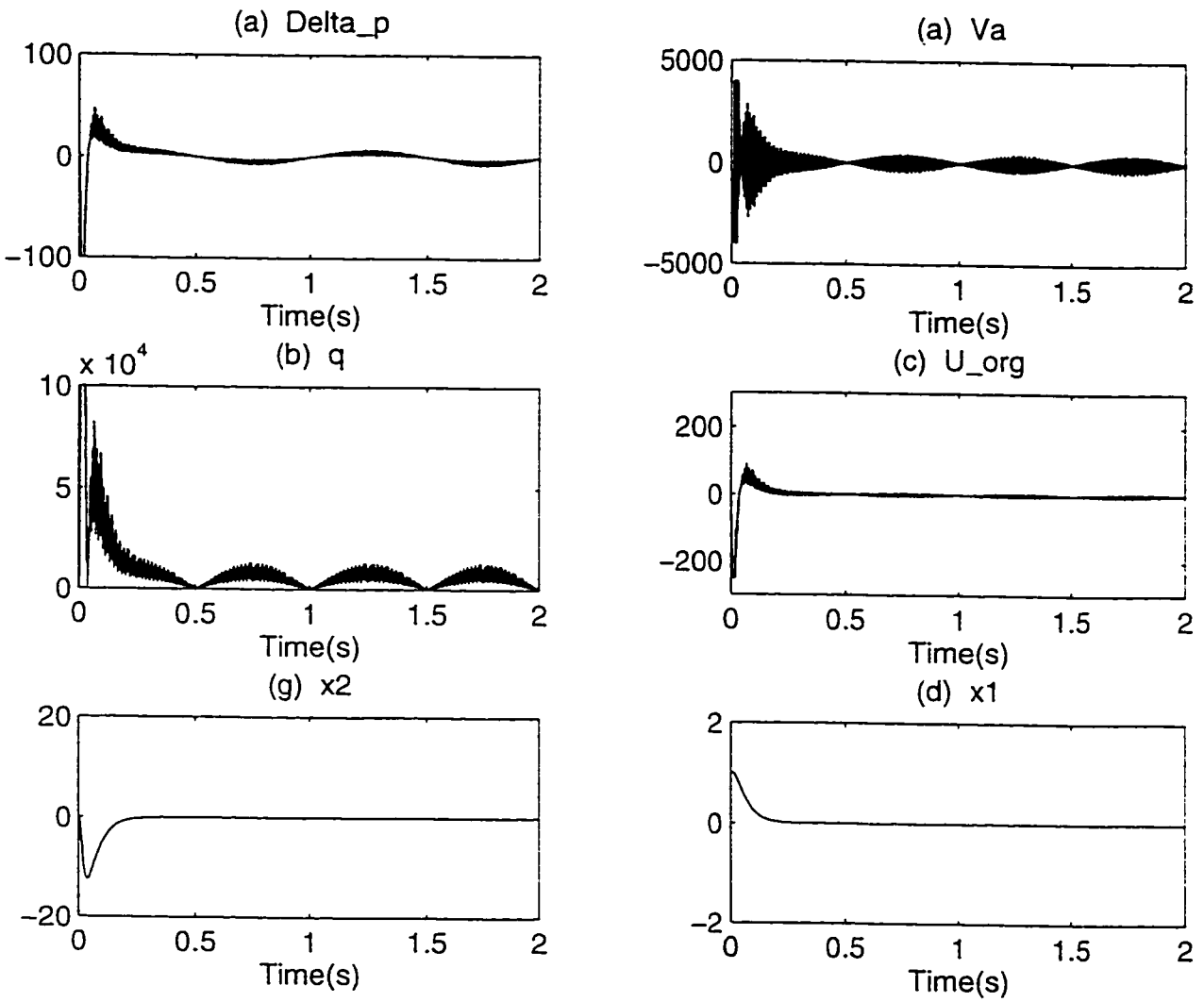

Figure 5.4: Example 1. Accessible States: Constant Par. Uncrt. with ext. disturbance

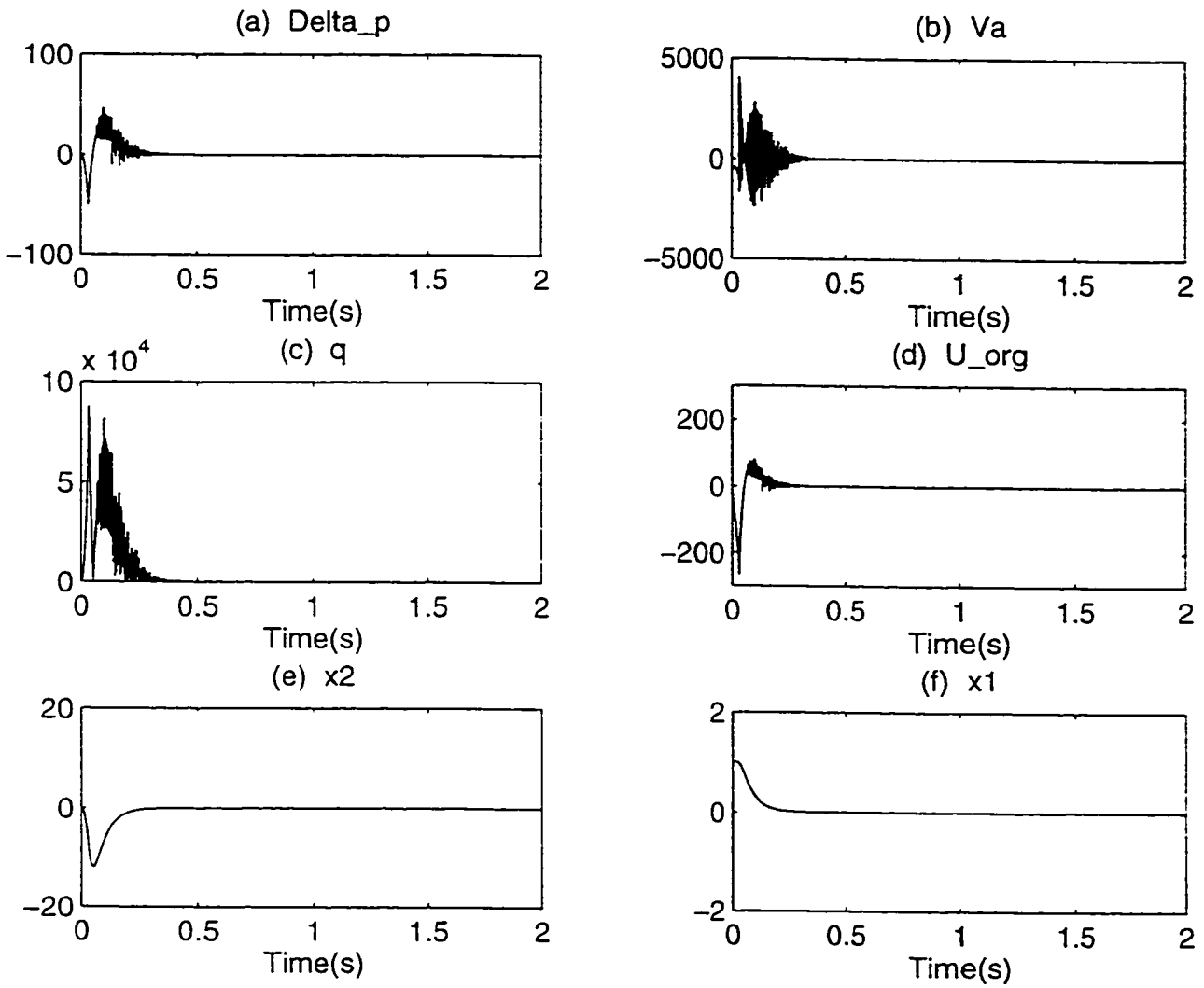

Figure 5.5: Example 1. Accessible States: Case 1.

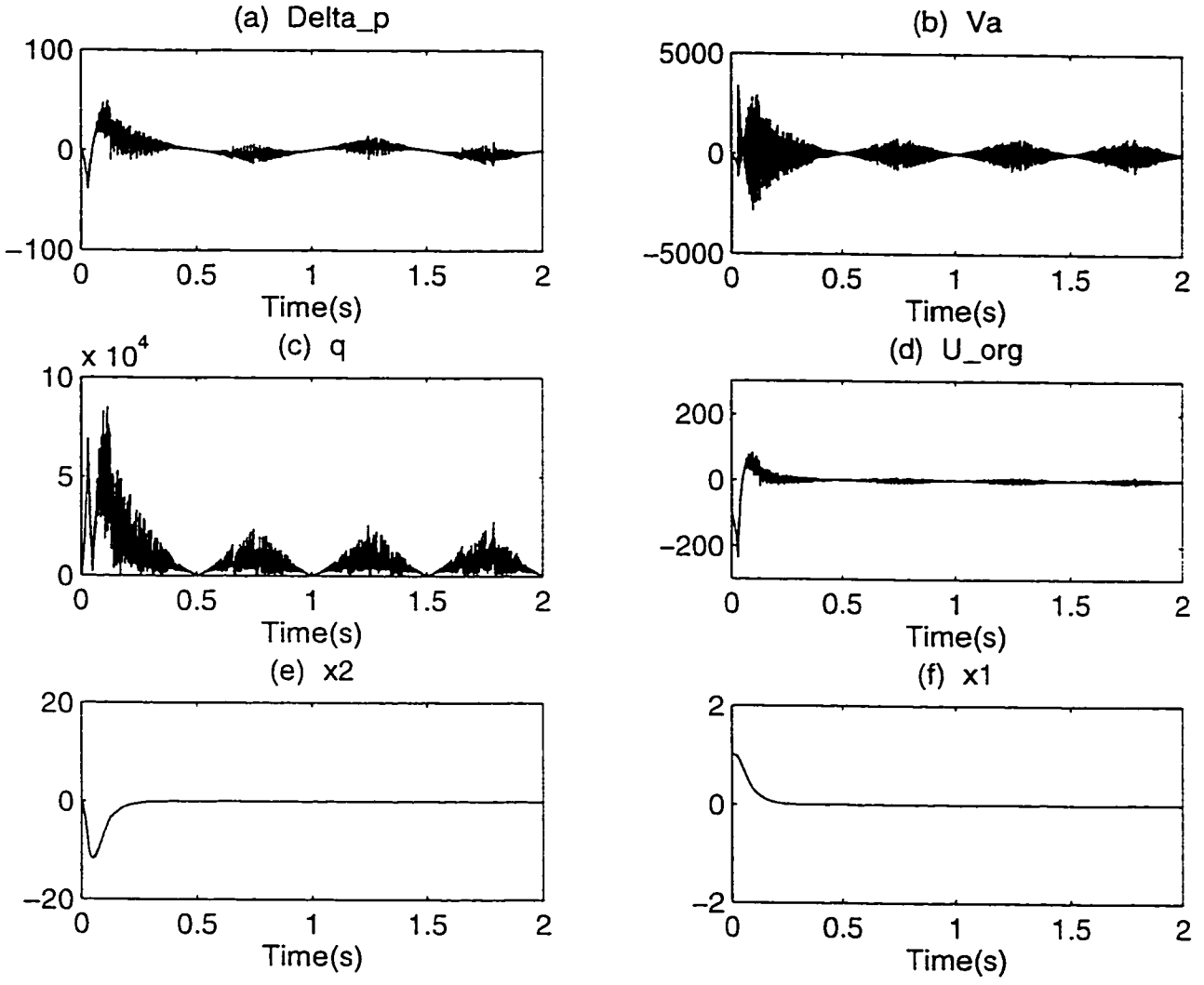

Figure 5.6: Example 1. Accessible States: Case 2.

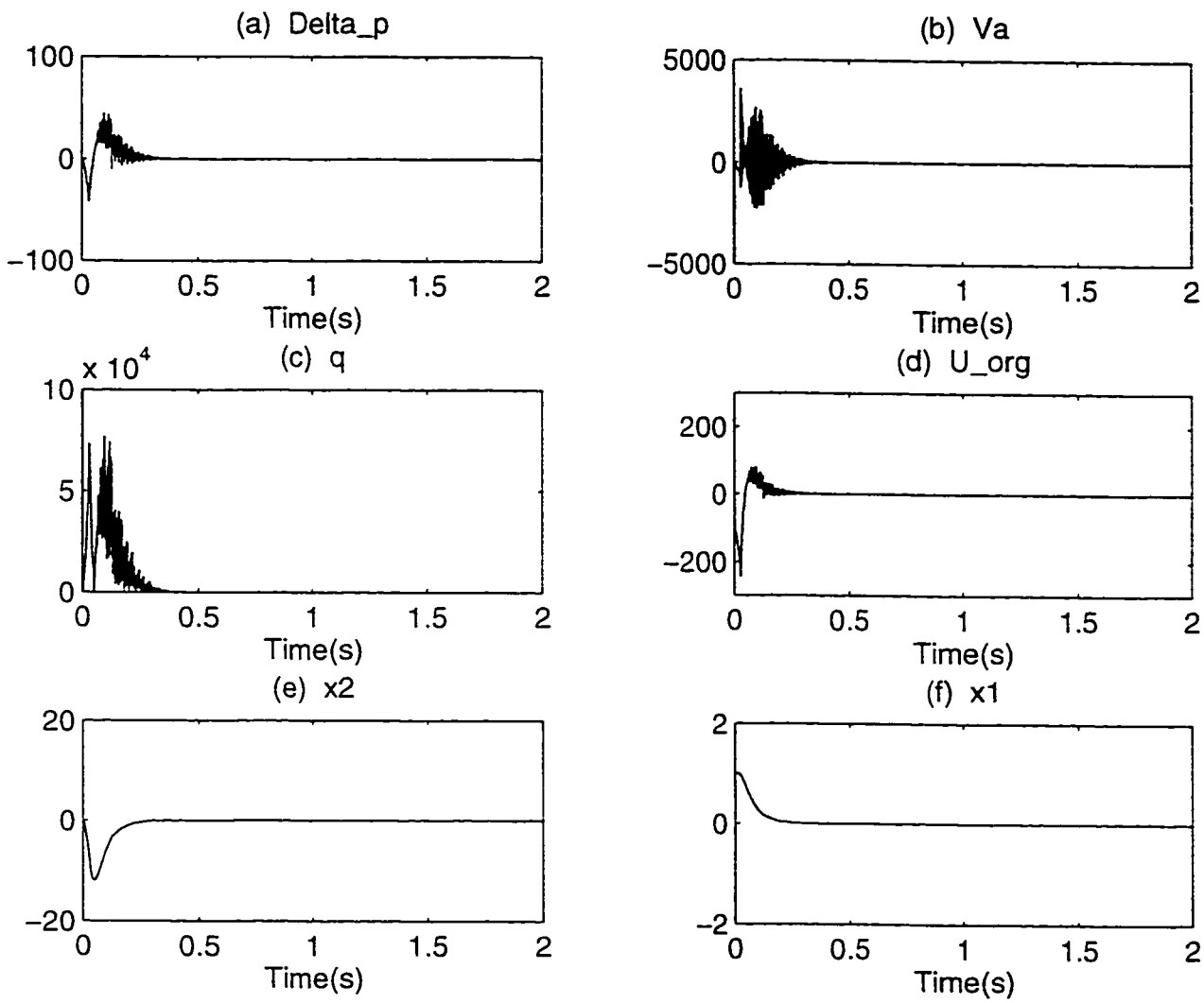

Figure 5.7: Example 1. Accessible States: Case 1.(with integrator replaced by LPF)

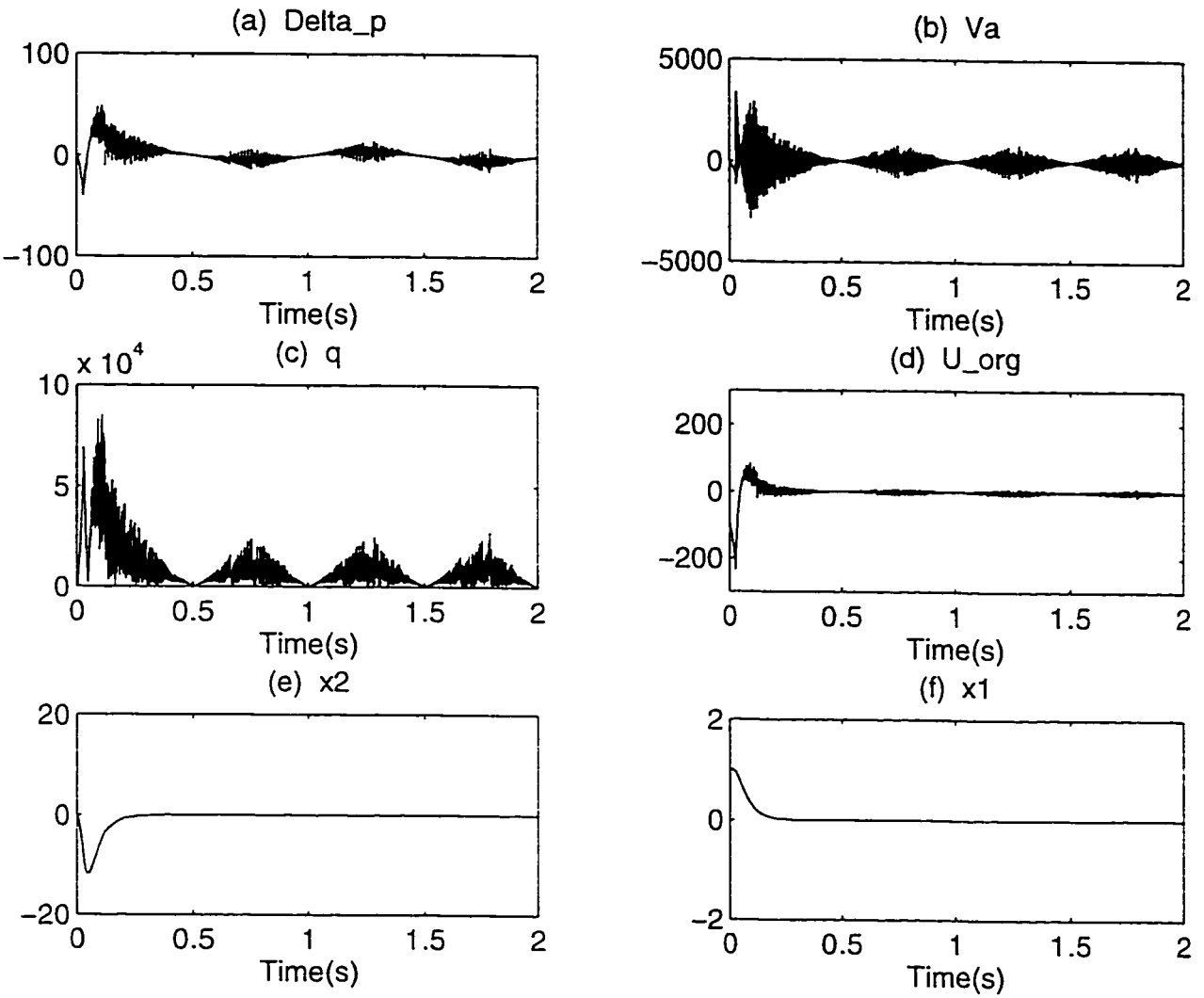

Figure 5.8: Example 1. Accessible States: Case 2. (with integrator replaced by LPF)

- Figure 5.5 (c) shows the adaptive value of the magnitude of the signum term.q, determined by Eqn. 5.13. Initially, the value of q is very large as the value of the estimate of the parameter uncertainty is large. The magnitude of the signum term should be large enough to maintain the robustness of the system.

- Augmenting the linearized system by a pure integrator will also suppress state variable chattering. The chatter is not visible in the output as shown in Figure 5.5 (f). So, the given system is stable and robust against system parameter uncertainties.

- Figure 5.6 shows the simulation results for Ex.1 when the states of the system are accessible and both the system parameter uncertainties and external disturbance are taken into consideration.

- As in the previous case, the given system is stable and robust against parameter uncertainties and external disturbances. $\Delta p = \Delta a_2 x_1^2 + \Delta a_1 U_{org} + f(t)$ where $f(t) = 20sin(2\pi 0.4t)$. These uncertainties are estimated by Δp given by Eqn. 4.36, as shown in the Figure 5.6 (a).

- Figure 5.6 (c) shows the adaptive value of the magnitude of the signum term.q.

- Figure 5.6 (f) shows the control signal for the original nonlinear system. We can see from Figure 5.6 (b) and (f), the chattering of the input signal to the original system is reduced.

- Figure 5.7 and Figure 5.8 show the simulation results for Example 1, when the states of the system are accessible and the integrator is replaced by a 1st-order low-pass filter. Both the cases are considered here also.

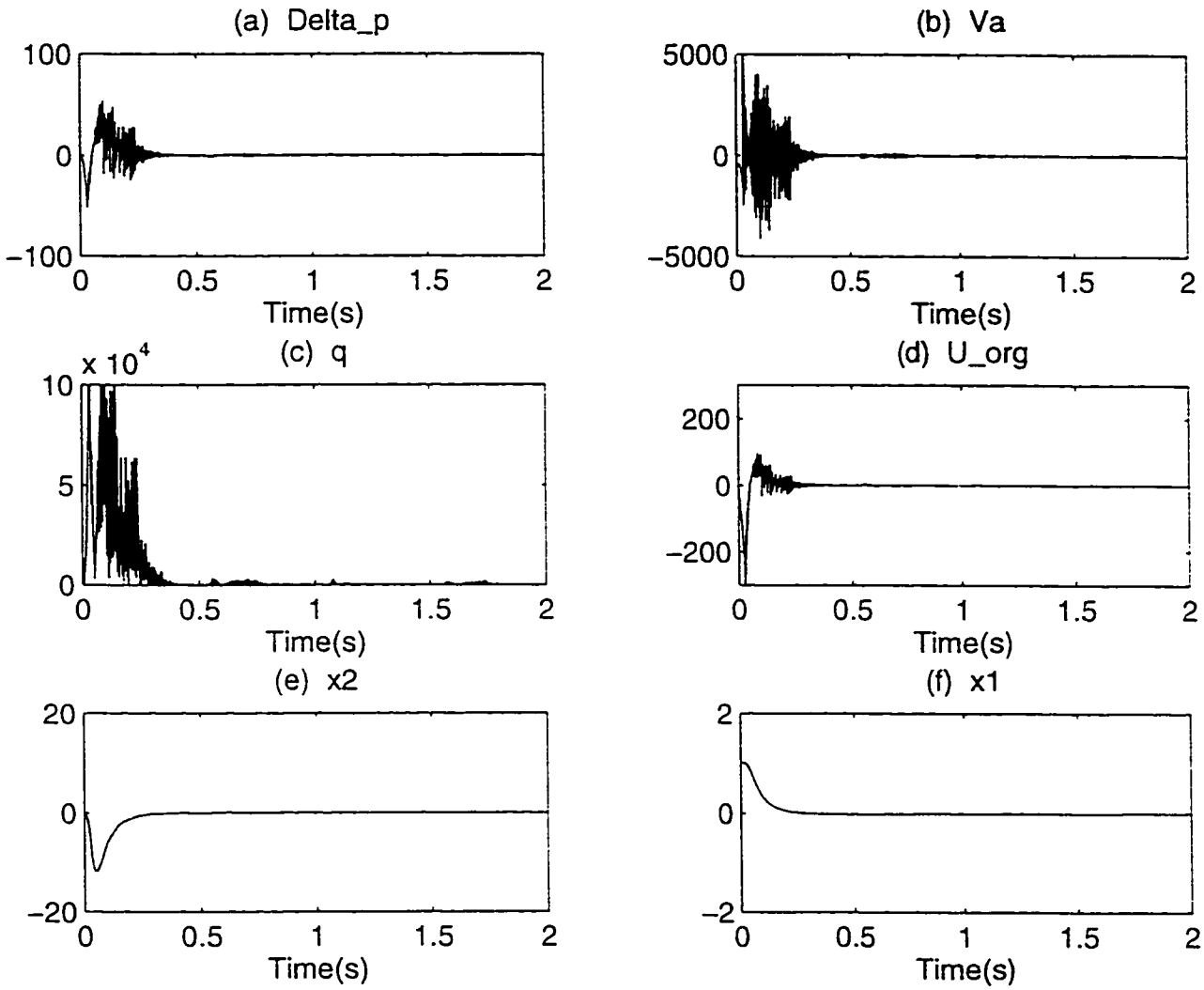

Figure 5.9: Example 1. Inaccessible States: Case 1.

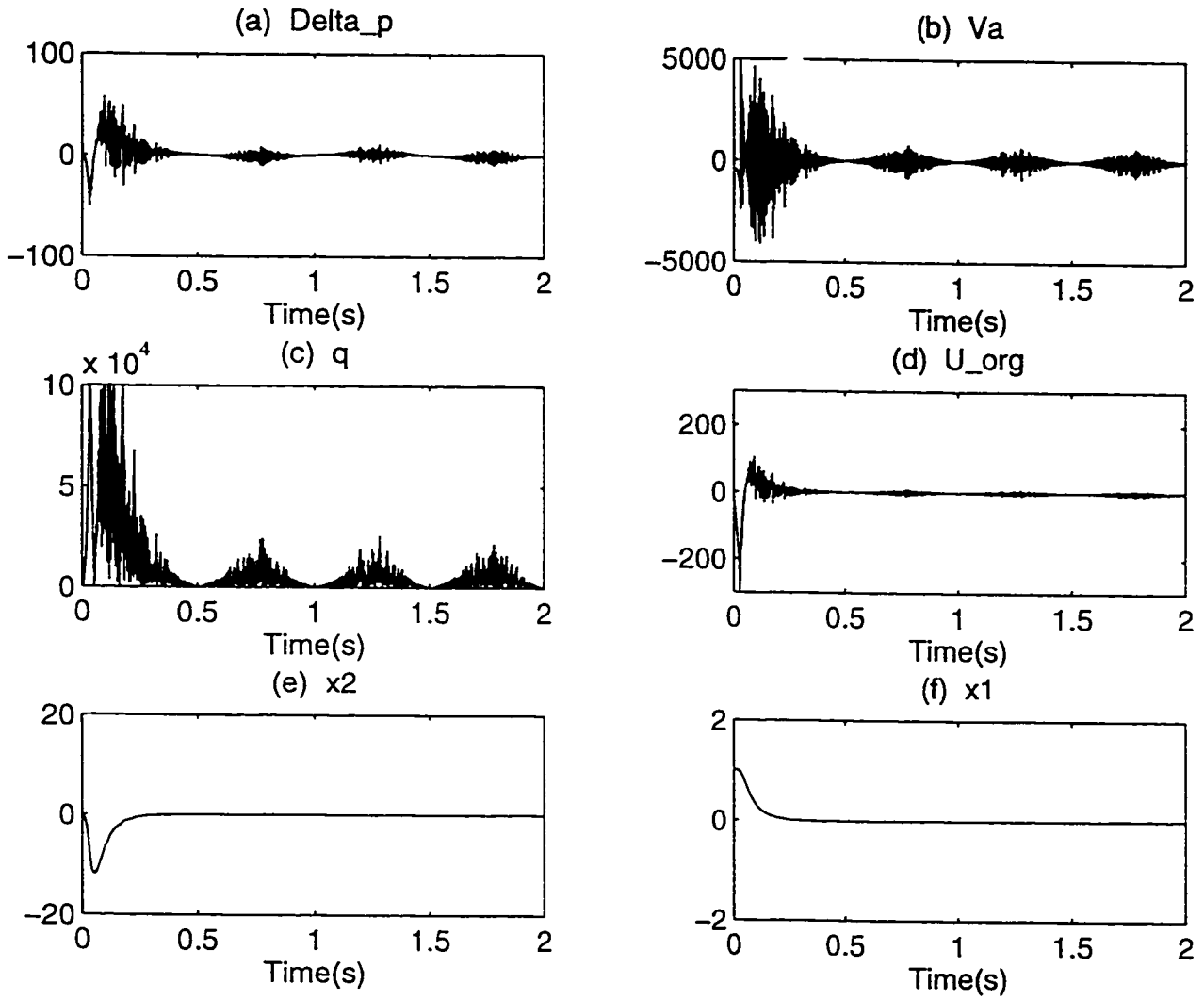

Figure 5.10: Example 1. Inaccessible States: Case 2.

States	Case	Power of U	Settling Time		No. of Switchings		
			x_1	x_2	U_{org}	V_a	S
Accessible	Case 1	1073.3	0.197	0.357	942	1358	1360
"	Case 2	1083.4	0.19	1.363	1193	1383	1389
Inaccessible	Case 1	1106.9	0.584	1.667	270	844	651
"	Case 2	1201.8	0.643	1 911	1099	1303	1299

Table 5.1: Results of Example 1.

- Figure 5.9 and Figure 5.10 show the simulation results when the states of the nonlinear system are inaccessible. Here we have designed the observer for the nonlinear system [36] which guarantees the stability of the whole system, the plant plus the observer. The same two cases are repeated.

- We can see from Figure 5.9 and Figure 5.10 that the magnitude of chattering of the input signal to the augmented linearized system and the original system is more when compared to the case of accessible states. And the states also take a longer settling time.

From Table 5.1, we can get the summary of the simulation of Example 1. We can see that the inaccessible states case requires more control effort and longer settling times of the states when compared to the accessible states case. And the controller is robust enough to deal with both the parameter uncertainties and external disturbances. The chattering index can be measured by the number of switchings in the control signal. We can see that the number of switchings in the control signal for the augmented linearized system is much more than that of the control signal for the Nonlinear system.

5.2 Example. 2

Consider a single link joint flexible manipulator represented by:

$$
\begin{aligned}
\dot{x}_1 &= x_2 \\
\dot{x}_2 &= -\frac{Mgl}{I} sin(x_1) - \frac{k}{I}(x_1 - x_3) \\
\dot{x}_3 &= x_4 \\
\dot{x}_4 &= \frac{k}{J}(x_1 - x_3) + \frac{1}{J} U_{org}
\end{aligned} \tag{5.18}
$$

Let $p_1 = \frac{Mgl}{I} = 10$, $k = 5$, $I = 1$ and $J = 0.5$.

Now let the parameters p_1 and k be perturbed by Δp_1 and Δk, respectively.

Consider the new set of state variables,

$$
\begin{aligned}
z_1 &= x_1 \\
z_2 &= x_2 \\
z_3 &= -p_1 sin x_1 - \frac{k}{I}(x_1 - x_3) \\
z_4 &= -p_1 x_2 cos x_1 - \frac{k}{I}(x_2 - x_4)
\end{aligned} \tag{5.19}
$$

then, the new state equations are

$$
\begin{aligned}
\dot{z}_1 &= z_2 \\
\dot{z}_2 &= z_3 - [\Delta p_1 sin x_1 + \frac{\Delta k}{I}(x_1 - x_3)] \\
\dot{z}_3 &= z_4 \\
\dot{z}_4 &= l_1 + l_2 + l_3 + \Delta p[p_1 cos x_1 + \frac{k}{I}]
\end{aligned} \tag{5.20}
$$

where

$$
\begin{aligned}
l_1 &= p_1 x_2^2 sinx_1 + p_1^2 sinx_1 cosx_1 \\
l_2 &= \frac{p_1 k}{I}(x_1 - x_3)cosx_1 + \frac{k^2}{JI}(x_1 - x_3) \\
l_3 &= \frac{p_1 k}{I} sinx_1 + \frac{k^2}{I^2}(x_1 - x_3)
\end{aligned} \tag{5.21}
$$

and

$$
\Delta p = \Delta p_1 sinx_1 + \frac{\Delta k}{I}(x_1 - x_3) \tag{5.22}
$$

The nonlinearities can be cancelled by the control law of the form

$$
U_{org} = -\frac{JI}{k}[l_1 + l_2 + l_3 - bv] \tag{5.23}
$$

where v is an equivalent input to be designed lead to a linear input-state relation. After linearization, the linearized system is given by:

$$
\begin{aligned}
\dot{z}_1 &= z_2 \\
\dot{z}_2 &= z_3 - \Delta p \\
\dot{z}_3 &= z_4 \\
\dot{z}_4 &= v + \Delta p(p_1 cosx_1 + \frac{k}{I})
\end{aligned} \tag{5.24}
$$

where $\Delta p = \Delta p_1 sinz_1 - \frac{\Delta k}{k}(p_1 z_1 + z_3)$.

Performing another coordinate transformation and assuming constant uncertainty.

the final linearized system is given by

$$\begin{bmatrix} \dot{w}_1 \\ \dot{w}_2 \\ \dot{w}_3 \\ \dot{w}_4 \end{bmatrix} = \begin{bmatrix} 0 & 1 & 0 & 0 \\ 0 & 0 & 1 & 0 \\ 0 & 0 & 0 & 1 \\ 0 & 0 & 0 & 0 \end{bmatrix} \begin{bmatrix} w_1 \\ w_2 \\ w_3 \\ w_4 \end{bmatrix} + \begin{bmatrix} 0 \\ 0 \\ 0 \\ b \end{bmatrix} v + \begin{bmatrix} 0 \\ 0 \\ 0 \\ 1 \end{bmatrix} \Delta p_{new} \tag{5.25}$$

where

$$\begin{aligned} \Delta p_{new} = \Delta p(p_1 cos w_1 + \frac{k}{I}) - (w_3 cos w_1 - w_2^2 sin w_1) \\ (\Delta p_1 - \frac{\Delta k p_1}{k}) \\ + \frac{\Delta k \Delta p}{k}(p_1 cos w_1 + \frac{k}{I}) + \frac{\Delta k}{k} v + f(t) \end{aligned} \tag{5.26}$$

Here $f(t) = 20 sin(2\pi 0.4t)$ is the external disturbance

and

$$v = l_1 + l_2 + l_3 + \frac{k}{JI} U_{org} \tag{5.27}$$

When the system is augmented by an integrator, the canonical controllable form of the augmented linearized system is given by:

$$\begin{bmatrix} \dot{w}_1 \\ \dot{w}_2 \\ \dot{w}_3 \\ \dot{w}_4 \\ \dot{w}_5 \end{bmatrix} = \begin{bmatrix} 0 & 1 & 0 & 0 & 0 \\ 0 & 0 & 1 & 0 & 0 \\ 0 & 0 & 0 & 1 & 0 \\ 0 & 0 & 0 & 0 & 1 \\ 0 & 0 & 0 & 0 & 0 \end{bmatrix} \begin{bmatrix} w_1 \\ w_2 \\ w_3 \\ w_4 \\ w_5 \end{bmatrix} + \begin{bmatrix} 0 \\ 0 \\ 0 \\ 0 \\ b \end{bmatrix} v_a + \begin{bmatrix} 0 \\ 0 \\ 0 \\ 1 \\ 0 \end{bmatrix} \Delta p_{new} \tag{5.28}$$

Note that $w_5 = v$. The switching function of the augmented system is

$$S(w) = 1500w_1 + 1150w_2 + 235w_3 + 32w_4 + w_5 \tag{5.29}$$

where the coefficients of the S(x) are chosen according to the formula as mentioned before. The desired eigenvalues are

$$\lambda_{1,2,3,4} = -15, -10, -5 \ \& -2 \tag{5.30}$$

The augmented control law is given by:

$$v_a = -(\frac{1}{30})[10S(w) + 1500w_2 + 1150w_3 + 235w_4 + 32w_5 + qsgn(S(w))] \tag{5.31}$$

Here b = 30, k = 10 and q is given by:

$$q = z \mid \frac{(c5 - a5)(1 - b)}{b} \mid \Delta p_{new} \tag{5.32}$$

where z =30 and a5=0.

The Luenberger Observer matrix, **G** is synthesized by ITAE Butterworth standard forms for closed-loop responses to get optimal performance indices. The eigenvalues of the **A** − **GH** matrix are determined by the characteristic polynomial

$$\mid sI - (A - GH) \mid = s^5 + 3.23\omega_0 s^4 + 5.23\omega_0^2 s^3 + 5.23\omega_0^3 s^2 \tag{5.33}$$

$$+3.23\omega_0^4 s + \omega_0^5/b \tag{5.34}$$

where $\omega_0 = 5$. The elements of the matrix **G** are

$$g_1 = 3.23\omega_0, \quad g_2 = 5.23\omega_0^2, \quad g_3 = 5.23\omega_0^3, \quad g_4 = 3.23\omega_0^4$$

$$g_5 = \omega_0^5/b \tag{5.35}$$

$$G = [16.15 \quad 130.75 \quad 653.75 \quad 2018.8 \quad 104.16]$$

When the states of the NL system are inaccessible, then an observer can be designed as mentioned in Chapter 4. The Observer for this Nonlinear system is given by:

$$\begin{aligned}
\dot{\hat{x}}_1 &= \hat{x}_2 + l_1(x_1 - \hat{x}_1) \\
\dot{\hat{x}}_2 &= -\frac{Mgl}{I} sin(x_1) - \frac{k}{I}(x_1 - \hat{x}_3) + l_2(x_1 - \hat{x}_1) \\
\dot{\hat{x}}_3 &= \hat{x}_4 + l_3(x_1 - \hat{x}_1)
\end{aligned}$$

$$\dot{\hat{x}}_4 = \frac{k}{J}(x_1 - \hat{x}_3) + \frac{1}{J}U_{org} + l_4(x_1 - \hat{x}_1) \tag{5.36}$$

The output of the Nonlinear system is $y = x_1$ with $bfL = [l_1 \quad l_2 \quad l_3 \quad l_4]^T$, the vector of observer gains. Following the procedure of designing the observer for a Nonlinear system as mentioned in Chapter 4, the observer gains vector, **L** can be taken as $\mathbf{L} = [13 \quad 61 \quad 107 \quad 58]^T$ so that the necessary and sufficient conditions for the stability of the nonlinear system plus its observer are satisfied with the feedback controller.

Simulations of the closed-loop augmented system were performed using Matlab.

5.2.1 Results

- Case 1: When the two parameters p_1 and k have constant Parameter Uncertainty with 25% variations. Ref Figure 5.11.

- Case 2: When the two parameters a_1 and a_2 have constant Parameter Uncertainty with 25% variations and an external disturbance $f(t) = sin(0.8\pi t)$ is considered. Ref Figure 5.12.

- Figure 5.11 shows the simulation results for Example 2. when the states of the system are accessible and only the parameter uncertainties are taken into account.

- From Figure 5.11 (a) and (c), we can see the presence of chatter at the input of the augmented linearized system, v_a, but the presence of chatter in the control signal of the original nonlinear system, U_{org}, is suppressed.

- Figure 5.11 (b) shows the adaptive value of the magnitude of the signum term, q, determined by Eqn. 5.13.

- Figure 5.11 shows the simulation results for Example 2. when the states of the nonlinear system are accessible and both the parameter uncertainties and external disturbances are taken into account.

- As seen from the simulation results, the given system is stable and robust against the parameter uncertainties and external disturbance, $f(t)$ given by $f(t) = sin(0.8\pi t)$.

- Figure 5.11 (b) shows the adaptive value of the magnitude of the signum term. q.

- As evident from Figure 5.11 (a) and (c), inspite of the external disturbance. the presence of chatter in the control signal of the original nonlinear system is suppressed.

- Figure 5.13 and Figure 5.14 are the simulation results for the inaccessible states case. We can see from Figure 5.9 and Figure 5.10 that the magnitude of chattering of the input signal to the augmented linearized system and the original system is more when compared to the case of accessible states. And the states also take a longer settling time.

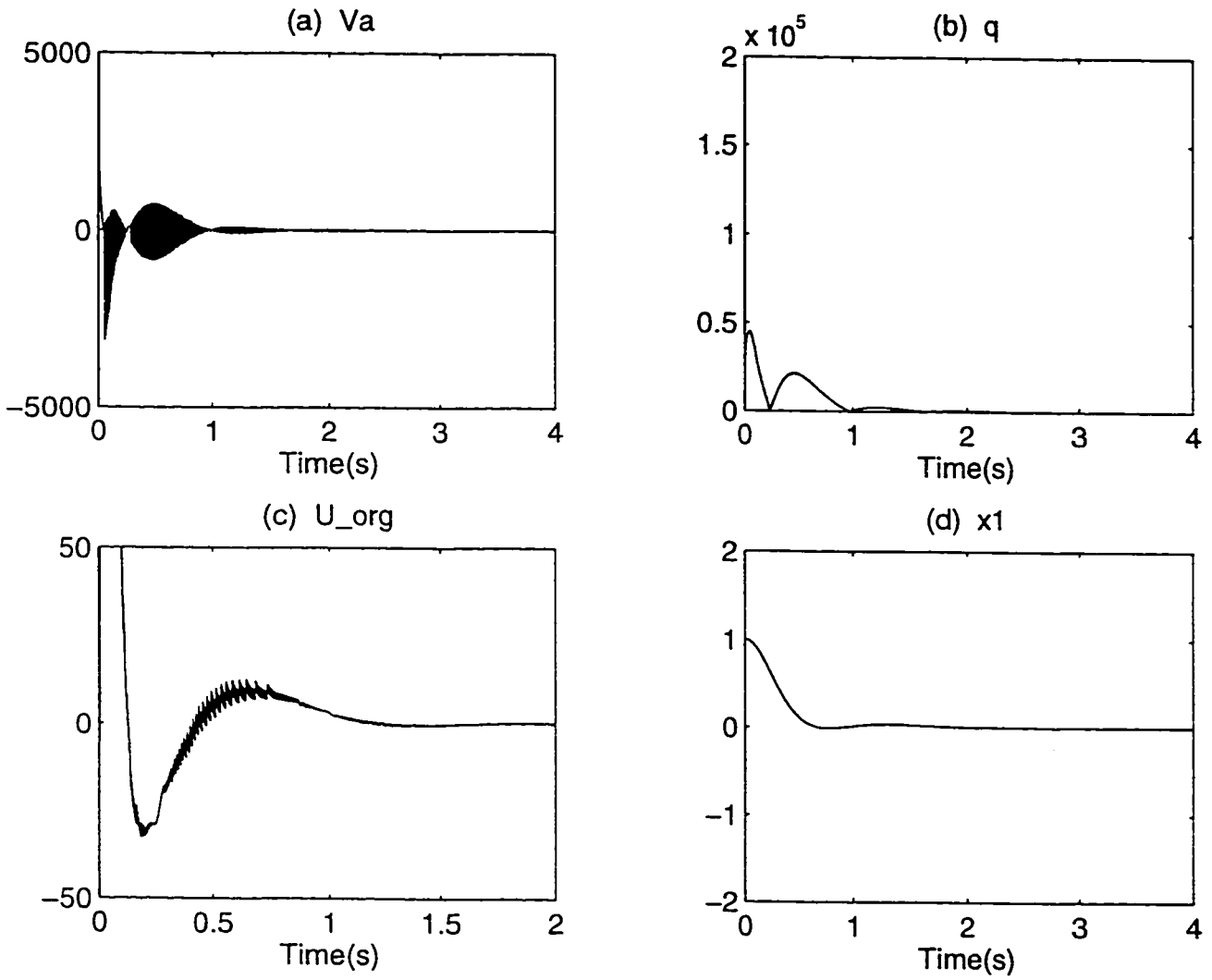

Figure 5.11: Example 2. Accessible States: Case 1.

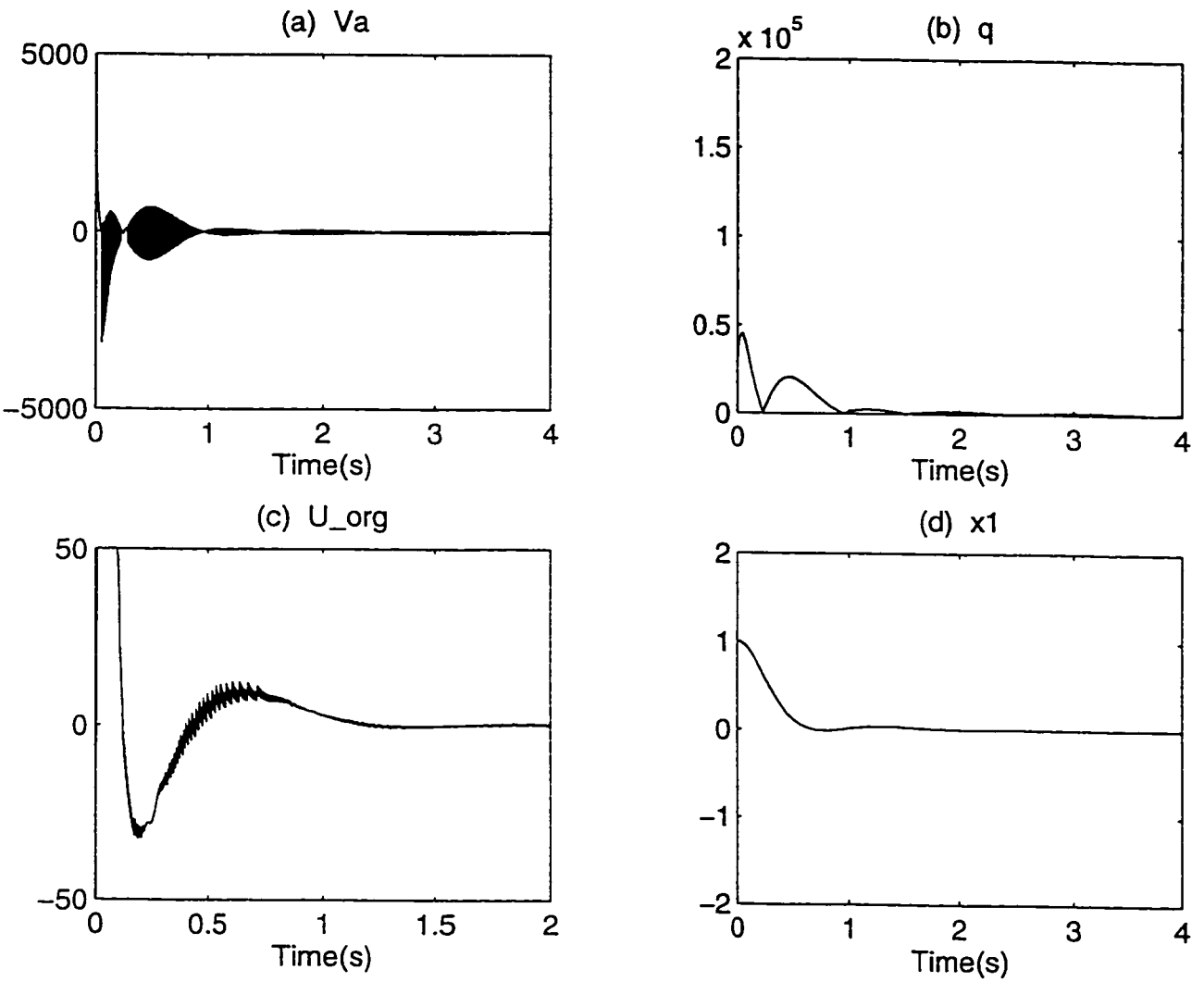

Figure 5.12: Example 2. Accessible States: Case 2.

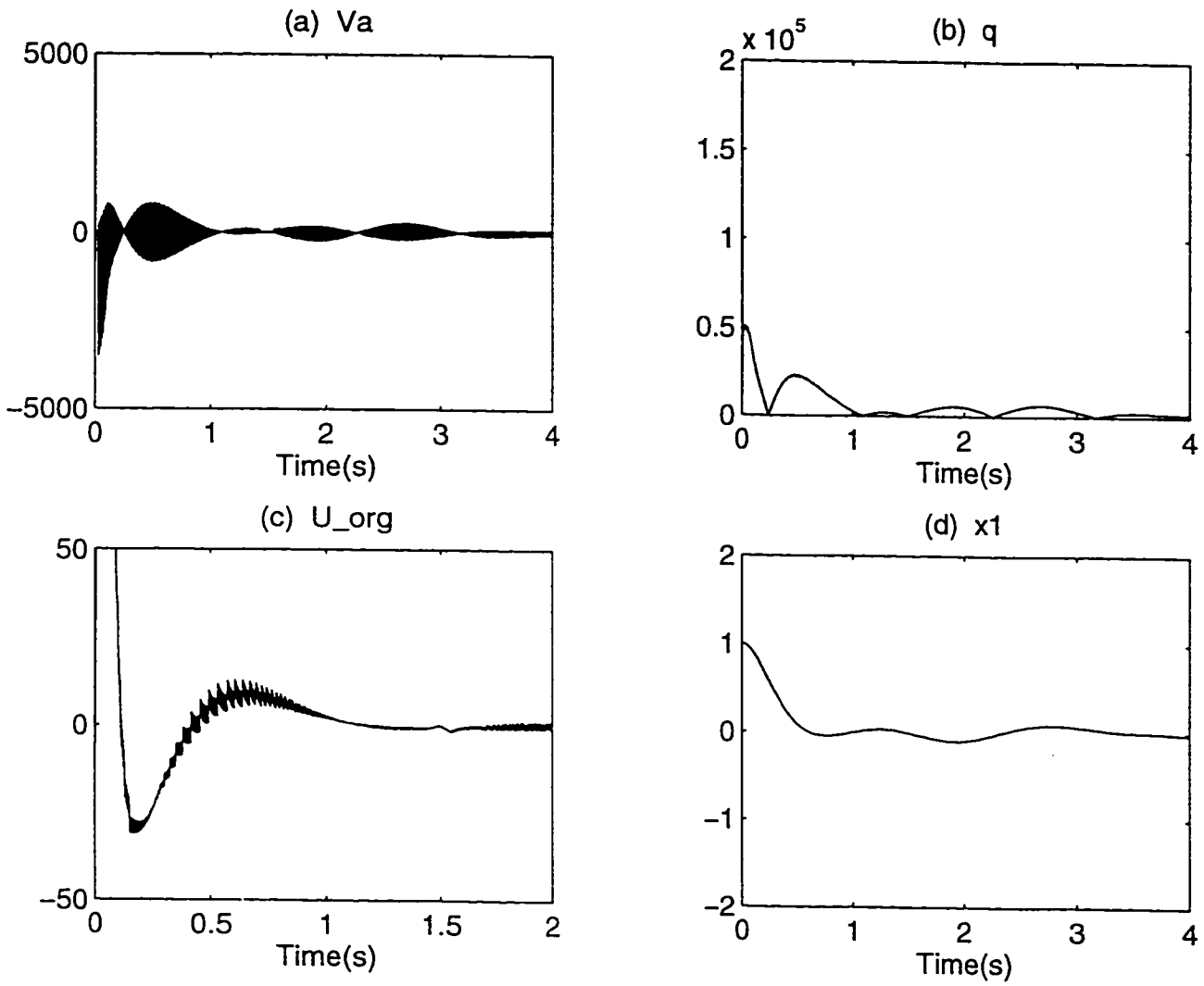

Figure 5.13: Example 2. Inaccessible States: Case 1.

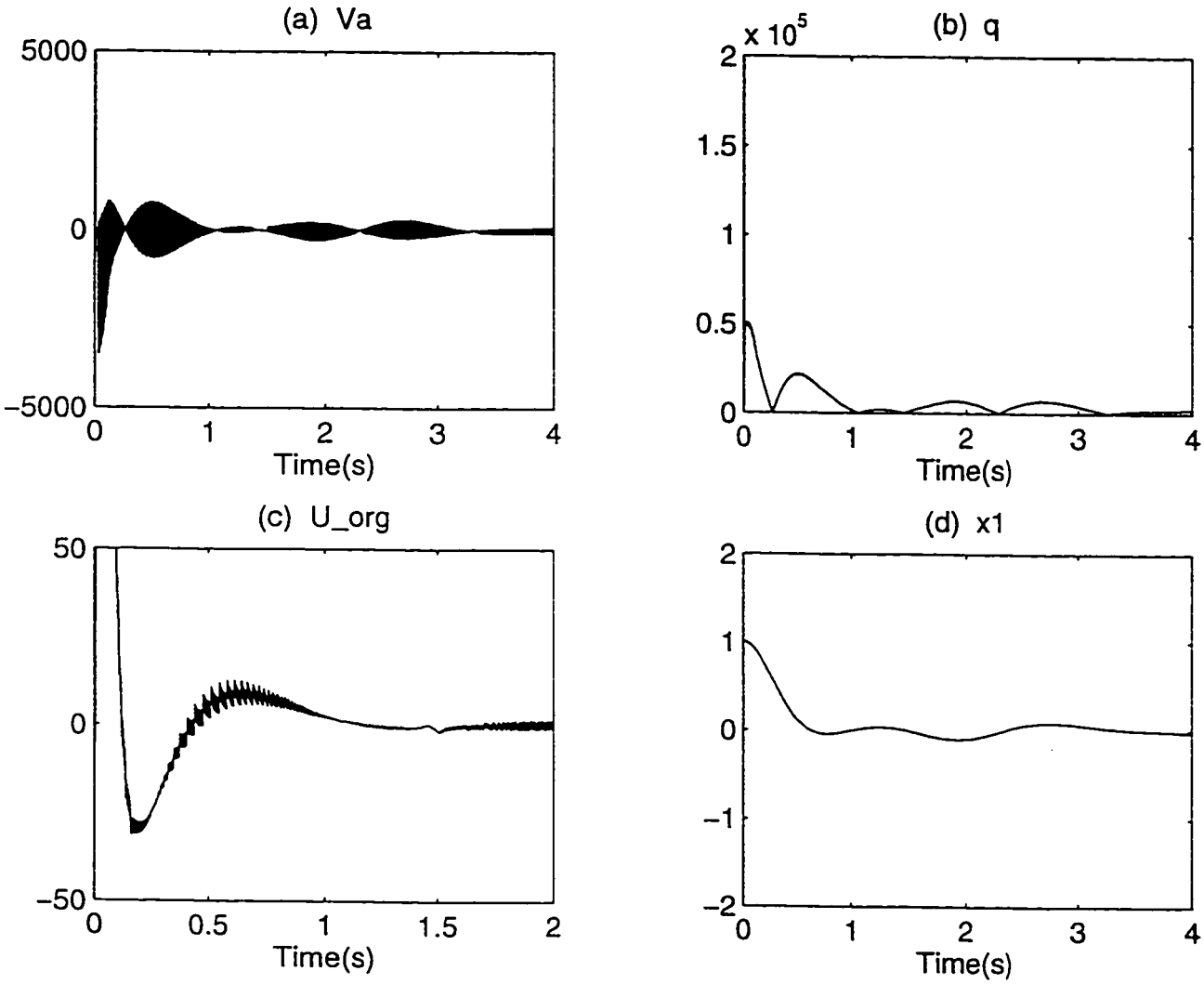

Figure 5.14: Example 2. Inaccessible States: Case 2.

States	Case	Power of U	Settling Time				No. of Switchings		
			x_1	x_2	x_3	x_4	U_{org}	V_a	S
Accessible	Case 1	456.5	0.992	1.326	1.328	2.05	902	1755	1747
"	Case 2	465.8	1.011	1.33	1.35	2.15	1312	1843	1837
Inaccessible	Case 1	476.3	4.15	5.52	5.61	5.87	1822	2489	2475
"	Case 2	489.9	4.25	5.94	5.78	5.92	2171	2682	2672

Table 5.2: Results of Example 2.

From Table 5.2, we can get the summary of the simulation of Example 2. We can see that the inaccessible states case requires more control effort and longer settling times of the states when compared to the accessible states case. And similar is the case when external disturbance is also considered.

5.3 Example 3

Consider the Nonlinear System:

$$\begin{aligned} \dot{x}_1 &= x_2 + x_2^2 + ax_3^2 + U_{org} \\ \dot{x}_2 &= x_3 + sin(x_1 - x_3) \\ \dot{x}_3 &= ax_3^2 + U_{org} \end{aligned} \tag{5.37}$$

Let $a = 10$ and be perturbed by Δa.

Consider the new set of state variables.

$$\begin{aligned} z_1 &= x_1 - x_3 \\ z_2 &= x_2 + x_2^2 \\ z_3 &= (1 + 2x_2)[x_3 + sin(x_1 - x_3)] \end{aligned}$$

then, the new state equations are

$$\begin{aligned} \dot{z}_1 &= z_2 \\ \dot{z}_2 &= z_3 - [\Delta p_1 sin x_1 + \frac{\Delta k}{I}(x_1 - x_3)] \\ \dot{z}_3 &= l_1 + l_2 + l_3 + l_4 U_{org} + \Delta p \end{aligned} \tag{5.38}$$

where

$$\begin{aligned} l_1 &= ax_3^2 + 2ax_2x_3^2 + 2x_3^2 + 2x_3 sin(x_1 - x_3) \\ l_2 &= (x_2 + x_2^2)(1 + 2x_2)cos(x_1 - x_3) \end{aligned}$$

$$
\begin{aligned}
l_3 &= 2[x_3 sin(x_1 - x_3) + sin^2(x_1 - x_3)] \\
l_4 &= 1 + 2x_2
\end{aligned}
\tag{5.39}
$$

and

$$
\Delta p = \Delta a(x_3^2 + 2x_2 x_3^2) \tag{5.40}
$$

The nonlinearities can be cancelled by the control law of the form

$$
U_{org} = -\frac{1}{l_4}[l_1 + l_2 + l_3 - bv] \tag{5.41}
$$

where v is an equivalent input to be designed lead to a linear input-state relation

$$
\begin{aligned}
\dot{z}_1 &= z_2 \\
\dot{z}_2 &= z_3 \\
\dot{z}_3 &= bv + \Delta p
\end{aligned}
\tag{5.42}
$$

After Linearization, the linearized system in state space representation is given by:

$$
\begin{bmatrix} \dot{z}_1 \\ \dot{z}_2 \\ \dot{z}_3 \end{bmatrix} = \begin{bmatrix} 0 & 1 & 0 \\ 0 & 0 & 1 \\ 0 & 0 & 0 \end{bmatrix} \begin{bmatrix} z_1 \\ z_2 \\ z_3 \end{bmatrix} + \begin{bmatrix} 0 \\ 0 \\ b \end{bmatrix} v + \begin{bmatrix} 0 \\ 0 \\ 1 \end{bmatrix} \Delta p \tag{5.43}
$$

where

$$\Delta p = \Delta a(x_3^2 + 2x_2x_3^2) + f(t) \tag{5.44}$$

Here $f(t) = 2sin(2\pi t)$ is the external disturbance.

When the system is augmented by an integrator, the canonical controllable form of the augmented linearized system is given by:

$$\begin{bmatrix} \dot{z}_1 \\ \dot{z}_2 \\ \dot{z}_3 \\ \dot{z}_4 \end{bmatrix} = \begin{bmatrix} 0 & 1 & 0 & 0 \\ 0 & 0 & 1 & 0 \\ 0 & 0 & 0 & 1 \\ 0 & 0 & 0 & 0 \end{bmatrix} \begin{bmatrix} z_1 \\ z_2 \\ z_3 \\ z_4 \end{bmatrix} + \begin{bmatrix} 0 \\ 0 \\ 0 \\ b \end{bmatrix} v_a + \begin{bmatrix} 0 \\ 0 \\ 1 \\ 0 \end{bmatrix} \Delta p \tag{5.45}$$

Note that $z_3 = v$. The switching function of the augmented system is

$$S(z) = 290z_1 + 129z_2 + 20z_3 + z_4 \tag{5.46}$$

where the coefficients of the S(x) are chosen according to the formulae as mentioned earlier.

The desired eigenvalues are

$$\lambda_{1,2} = -5 \pm j2, \quad \lambda_3 = -10$$

and

The augmented control law is given by:

$$v_a = -(\frac{1}{30})[10S(z) + 290z_2 + 129z_3 + 20z_4 + qsgn(S(z))] \tag{5.47}$$

Here b = 30 and k = 10. And q is given by:

$$q = z \mid \frac{(c3 - a3)(1 - b)}{b} \mid \Delta p \tag{5.48}$$

where z =30

Since the unknown system uncertainty $\Delta a(x_3^2 + 2x_2x_3^2)$ and external disturbance $f(t)$ are estimated by Δp, the magnitude of the signum term, q, in the VSC system is adjusted according to Δp. As seen from Equation 5.48, q will be large enough to maintain the robustness of the system against system uncertainties and external disturbance. When these unknown uncertainties and disturbance are absent, the magnitude of the signum term is zero and chattering does not exist.

The Luenberger Observer matrix, G is synthesized by ITAE Butterworth standard forms for closed-loop responses. The eigenvalues of the $\mathbf{A} - \mathbf{GH}$ matrix are determined by the characteristic polynomial

$$\mid sI - (A - GH) \mid = s^4 + 2.6\omega_0 s^3 + 3.4\omega_0^2 s^2 + 2.6\omega_0^3 s + \omega_0^4 \tag{5.49}$$

where $\omega_0 = 5$. The elements of the matrix $\mathbf{G}$ are

$$g_1 = 2.6\omega_0, g_2 = 3.4\omega_0^2, g_3 = 2.6\omega_0^3 \text{ and } g_4 = \omega_0^4/b$$

$$G = [13 \quad 85 \quad 195 \quad 20.8]$$

When the states of the NL system are inaccessible, then an observer can be designed as mentioned in Chapter 4. The Observer for this Nonlinear system is given by:

$$\begin{aligned}
\dot{\hat{x}}_1 &= \hat{x}_2 + \hat{x}_2^2 + a\hat{x}_3^2 + U_{org} + l_1(x_1 - \hat{x}_1) \\
\dot{\hat{x}}_2 &= \hat{x}_3 + sin(x_1 - \hat{x}_3) + l_2(x_1 - \hat{x}_1) \\
\dot{\hat{x}}_3 &= a\hat{x}_3^2 + U_{org} + l_3(x_1 - \hat{x}_1)
\end{aligned} \tag{5.50}$$

The output of the Nonlinear system is $y = x_1$ with $\mathbf{L} = [l_1 \quad l_2 \quad l_3]^T$, the vector of observer gains. Following the procedure of designing the observer for a Nonlinear system as mentioned in Chapter 4, the observer gains vector, $\mathbf{L}$ can be taken as $\mathbf{L} = [20 \quad 20 \quad 10]^T$ so that the necessary and sufficient conditions for the stability of the nonlinear system plus its observer are satisfied with a feedback controller. Simulations of the closed-loop augmented system were performed using matlab.

5.3.1 Results

- **Case 1:** When the parameter a has sinusoidal Parameter Uncertainty with 50% variation. Ref Figure 5.15.

- **Case 2:** When the parameter a has sinusoidal Parameter Uncertainty with 50% variation and an external disturbance $f(t) = sin(\pi t)$ is considered. Ref Figure 5.16.

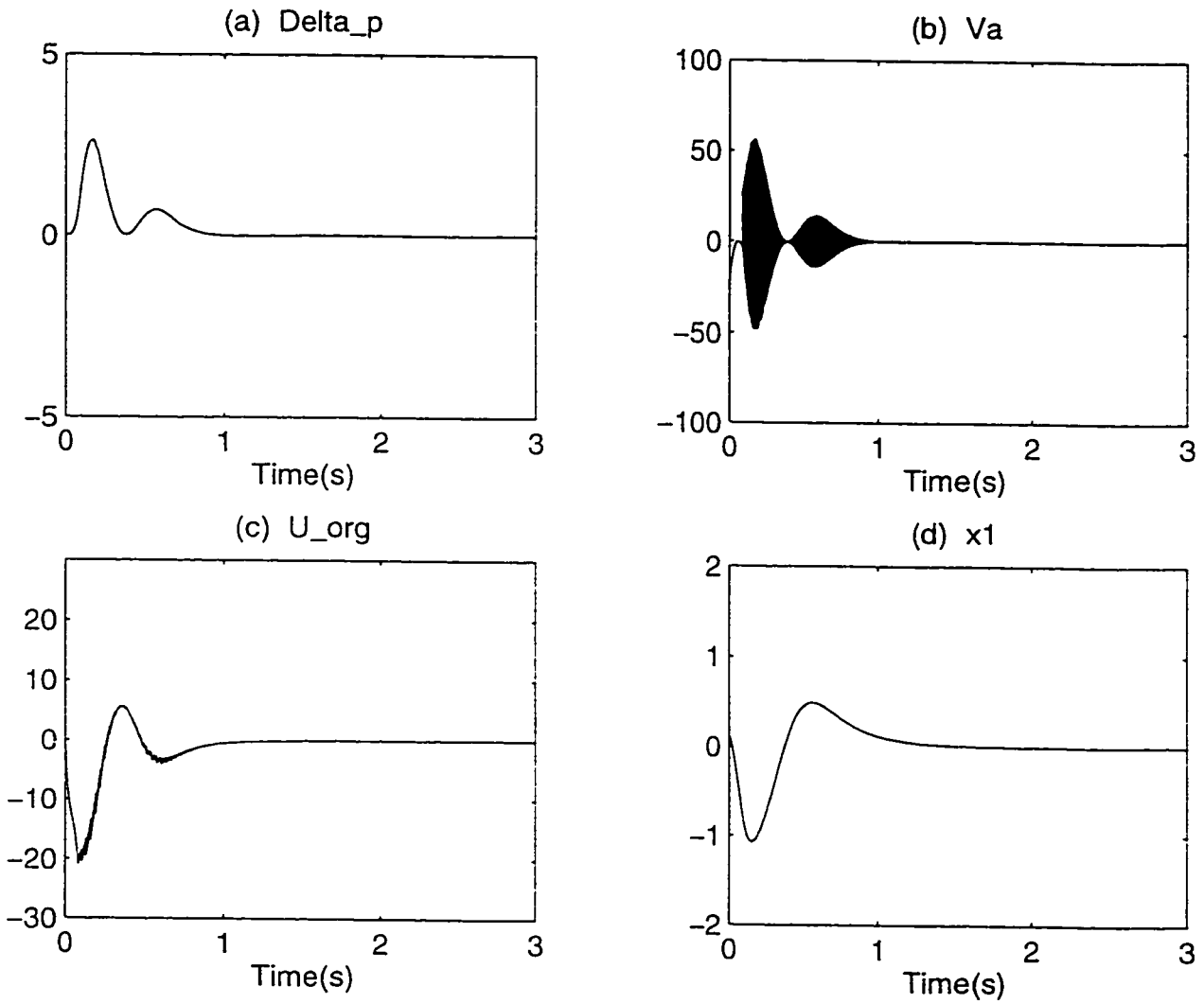

Figure 5.15: Example 3. Accessible States: Case 1.

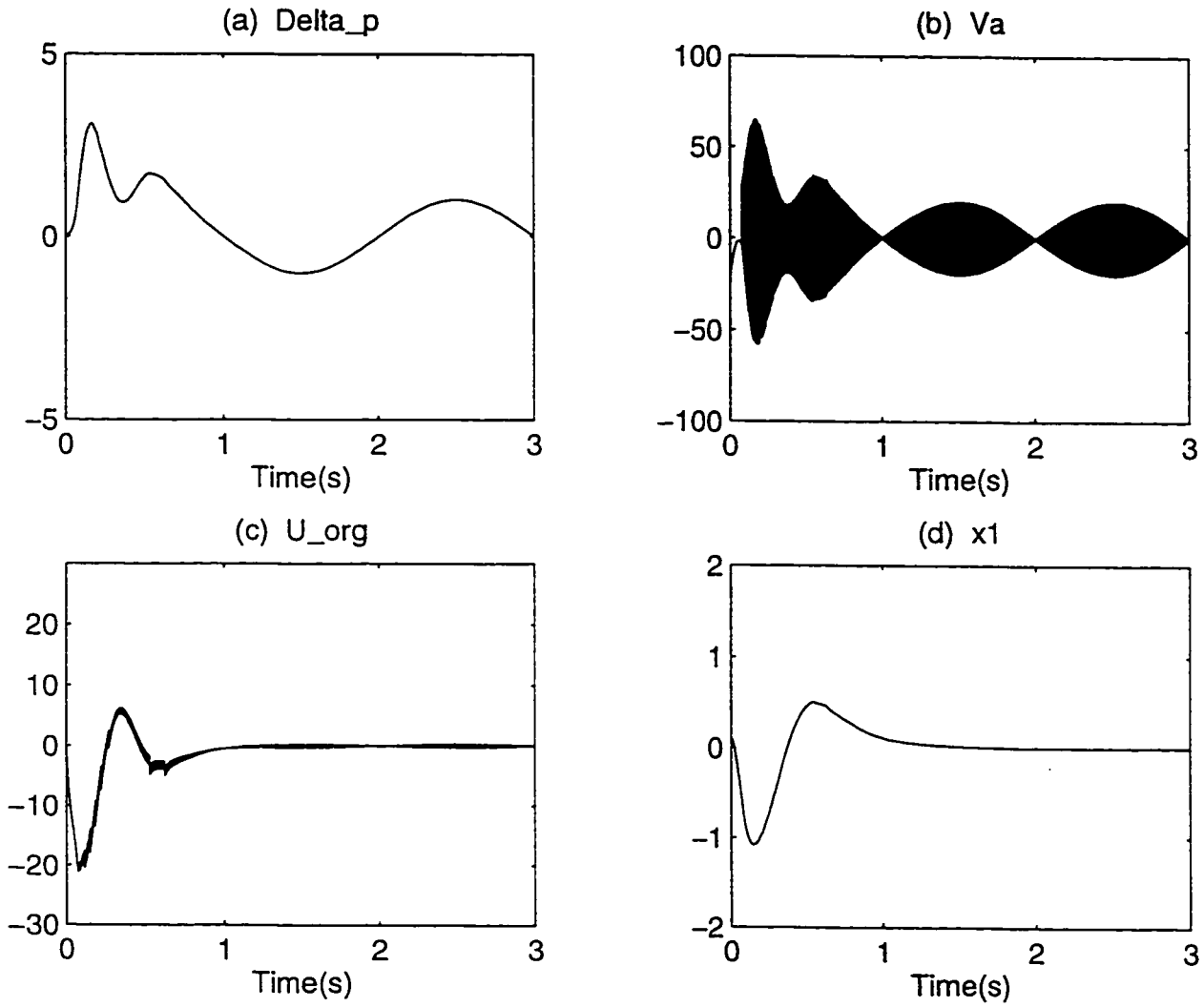

Figure 5.16: Example 3. Accessible States: Case 2.

- Figure 5.15 shows the simulation results for Example 3. when the states of the system are accessible and only the parameter uncertainties are taken into account.

- Figure 5.15 (a) shows the estimation of the system parameter variations given by Δp.

- From Figure 5.16 (b) and (c), we can see the presence of chatter at the input of the augmented linearized system, v_a, but the presence of chatter in the control signal of the original nonlinear system, U_{org}, is suppressed.

- Figure 5.11 (c) shows the output of the system. Here we can see that there is no presence of chatter in the output.

- Figure 5.16 shows the simulation results for Example 2. when the states of the nonlinear system are accessible and both the parameter uncertainties and external disturbances are taken into account.

- As seen from the simulation results, the given system is stable and robust against the parameter uncertainties and external disturbance. $f(t)$ given by $f(t) = sin(\pi t)$.

- Figure 5.11 (a) shows the estimation of the system parameter variations.

- As evident from Figure 5.11 (b) and (c), inspite of the external disturbance, the presence of chatter in the control signal of the original nonlinear system is suppressed.

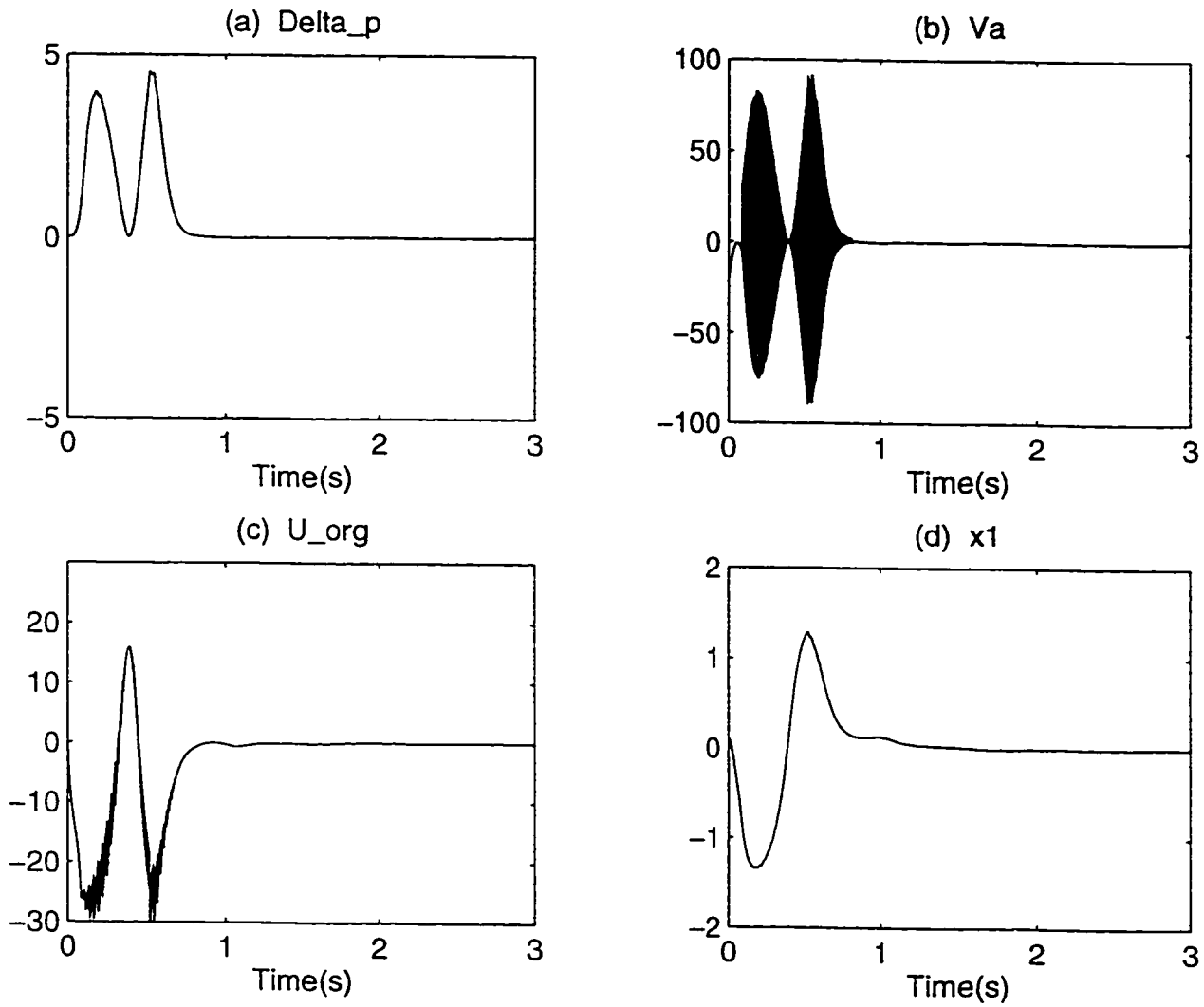

Figure 5.17: Example 3. Inaccessible States: Case 1.

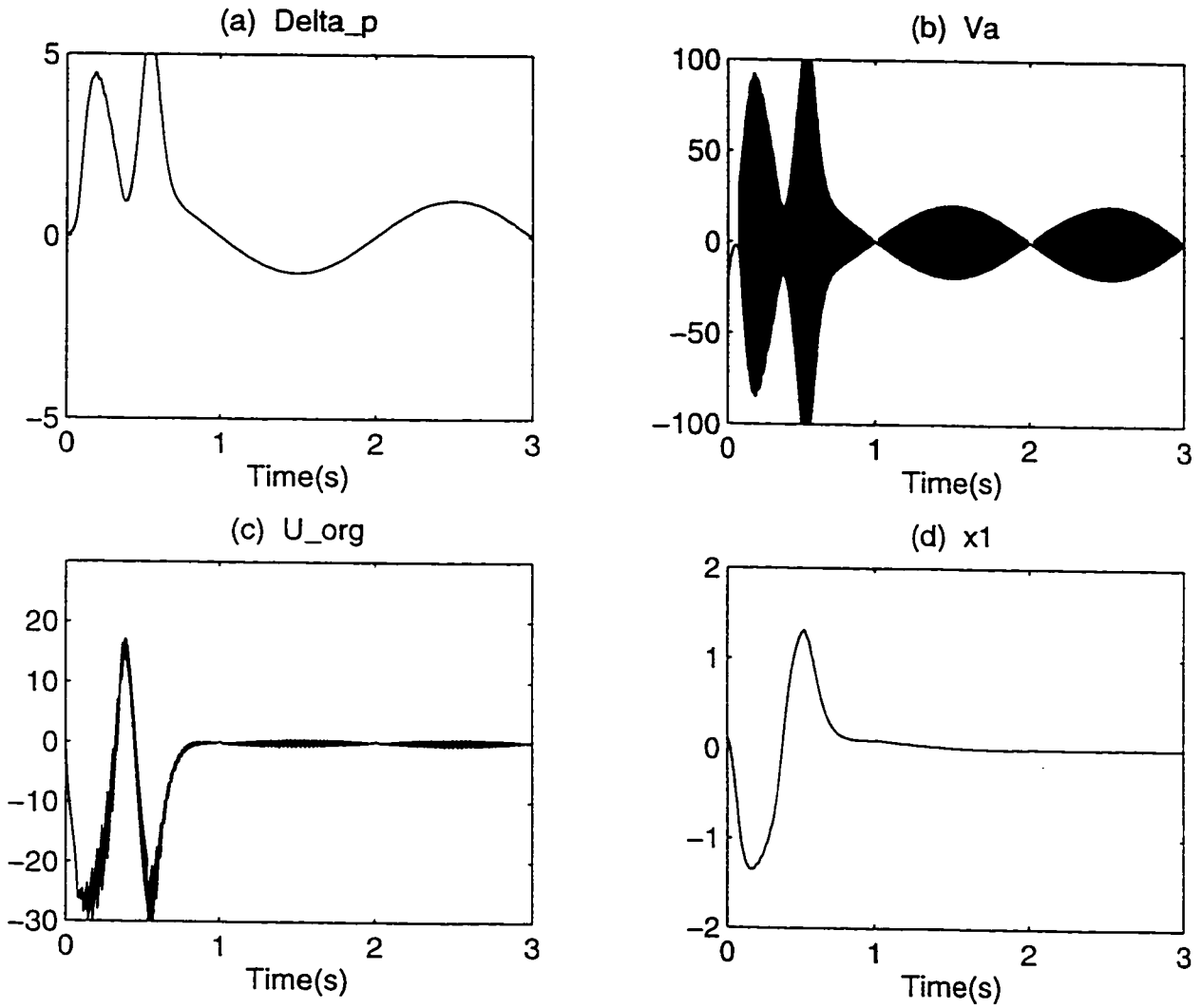

Figure 5.18: Example 3. Inaccessible States: Case 2.

States	Case	Power of U	Settling Time		No. of switchings			
			x_1	x_2	x_3	U_{org}	V_a	S
Accessible	Case 1	54.4	1.689	1.365	1.686	130	2062	2154
"	Case 2	56.57	1.73	1.39	1.726	1822	2897	2899
Inaccessible	Case 1	215.09	1.934	1.416	2.85	22	645	644
"	Case 2	223.93	1.992	1.512	2.87	1623	2627	2622

Table 5.3: Results of Example 3.

- Figure 5.17 and Figure 5.18 are the simulation results for the inaccessible states case. We can see from Figure 5.17 and Figure 5.18 that the magnitude of chattering of the input signal to the augmented linearized system and the original system is more when compared to the case of accessible states. And the states also take a longer settling time.

From Table 5.3, we can get the summary of the simulation of Example 3. We can see that the inaccessible states case requires more control effort and longer settling times of the states when compared to the accessible states case. And similar is the case when external disturbance is also considered.

5.4 Comparison with Kanellakopoulos et al. Scheme

5.4.1 Kanellakopulos et al. Method (Scheme 1)

Consider the example [23]

$$\begin{aligned} \dot{x}_1 &= x_2 + \theta x_1^2 \\ \dot{x}_2 &= x_3 \\ \dot{x}_3 &= u \end{aligned} \tag{5.51}$$

where θ is an unknown constant parameter. This is a "benchmark" example of adaptive nonlinear regulation as it violates the restrictions and asuumptions taken into consideration in the uncertainty-constrained schemes and the nonlinearity-constrained schemes proposed in [10,24 and 50]. Restrictions on the type of nonlinearities and assuming some geometric conditions in order to satisfy the matching conditions were set. But this example violates all the geometric conditions and growth assumptions mentioned in [10,24 and 50].

The adaptive control scheme involves successive estimation of the unknown constant parameter with the design of a new parameter estimator at each step. This method is a self tuning parameter estimation type of adaptive scheme. The whole scheme results in solving the following set of differential equations of the adaptive system

$$\begin{aligned} \dot{z}_1 &= -2z_1 + z_2 + z_1^2(\theta - \nu_1) \\ \dot{z}_2 &= -2z_2 + z_3 + 2z_1^2(1 + \nu_1 z_1)(\theta - \nu_2) \\ \dot{z}_3 &= -2z_3 + [4z_1^2(1 + \nu_1 z_1)(1 + \nu_2 z_1) + 2\nu_1(x_2 + \nu_2 x_1^2)x_1^2 + 5z_1^6](\theta - \nu_3) \end{aligned} \tag{5.52}$$

and

$$\begin{aligned}
\dot{\nu}_1 &= z_1^3 \\
\dot{\nu}_2 &= 2z_2 z_1^2(1+\nu_1 z_1) \\
\dot{\nu}_3 &= z_3[4z_1^2(1+\nu_1 z_1)(1+\nu_2 z_1) + 2nu_1(x_2+\nu_2 x_1^2)x_1^2 + 5z_1^6]
\end{aligned} \tag{5.53}$$

where ν_1, ν_2 and ν_3 are the successive estimates of the parameter θ. And z is the linearized system.

5.4.2 Adaptive VSC Method (Scheme 2)

Considering the same example taken by Kanellakoupolos et al., we apply the adaptive VSC concept.

$$\begin{aligned}
\dot{x}_1 &= x_2 + \theta x_1^2 \\
\dot{x}_2 &= x_3 \\
\dot{x}_3 &= u
\end{aligned} \tag{5.54}$$

Now let the parameters θ be perturbed by $\Delta\theta$.

After performing the Feedback Linearization with three coordinate transformations, the final linearized system is given by

$$\begin{bmatrix} \dot{w}_1 \\ \dot{w}_2 \\ \dot{w}_3 \end{bmatrix} = \begin{bmatrix} 0 & 1 & 0 \\ 0 & 0 & 1 \\ 0 & 0 & 0 \end{bmatrix} \begin{bmatrix} w_1 \\ w_2 \\ w_3 \end{bmatrix}$$

$$+\begin{bmatrix} 0 \\ 0 \\ b \end{bmatrix} v + \begin{bmatrix} 0 \\ 0 \\ 1 \end{bmatrix} \Delta p \tag{5.55}$$

where

$$\Delta p = 2\Delta\theta[x_1x_3 + 2\theta x_1^2x_2 + 2\theta^2x_1^4 + 2\Delta\theta x_1^2x_2 + 4\Delta\theta x_1^4$$
$$+\Delta\theta x_1^3 + x_2 + \theta x_1^2 + \Delta\theta x_1^2] + f(t) \tag{5.56}$$

Here $f(t) = 20sin(2\pi 0.4t)$ is the external disturbance.

When the system is augmented by an integrator, the canonical controllable form of the augmented linearized system is given by:

$$\begin{bmatrix} \dot{w}_1 \\ \dot{w}_2 \\ \dot{w}_3 \\ \dot{w}_4 \end{bmatrix} = \begin{bmatrix} 0 & 1 & 0 & 0 \\ 0 & 0 & 1 & 0 \\ 0 & 0 & 0 & 1 \\ 0 & 0 & 0 & 0 \end{bmatrix} \begin{bmatrix} w_1 \\ w_2 \\ w_3 \\ w_4 \end{bmatrix}$$
$$+\begin{bmatrix} 0 \\ 0 \\ 0 \\ b \end{bmatrix} v_a + \begin{bmatrix} 0 \\ 0 \\ 1 \\ 0 \end{bmatrix} \Delta p \tag{5.57}$$

Note that $w_4 = v$. The switching function of the augmented system is

$$S(z) = 290w_1 + 129w_2 + 20w_3 + w_4 \tag{5.58}$$

where the desired eigenvalues are

$$\lambda_{1,2} = -5 \pm j2, \quad \lambda_3 = -10$$

and

The augmented control law is given by:

$$v_a = -(\frac{1}{30})[10S(z) + 290z_2 + 129z_3 + 20z_4 + qsgn(S(z))] \tag{5.59}$$

Here b = 20 and k = 5. And q is given by:

$$q = z \mid \frac{(c3 - a3)(1 - b)}{b} \mid \Delta p \tag{5.60}$$

where z =7

The Luenberger Observer matrix, **G** is synthesized by ITAE Butterworth standard forms for closed-loop responses. The eigenvalues of the $\mathbf{A} - \mathbf{GH}$ matrix are determined by the characteristic polynomial

$$\mid sI - (A - GH) \mid = s^4 + 2.6\omega_0 s^3 + 3.4\omega_0^2 s^2 + 2.6\omega_0^3 s + \omega_0^4 \tag{5.61}$$

where $\omega_0 = 20$. The elements of the matrix **G** are

$$g_1 = 2.6\omega_0, \quad g_2 = 3.4\omega_0^2, \quad g_3 = 2.6\omega_0^3 \ \ and \ \ g_4 = \omega_0^4/b$$

$$G = [52 \quad 1360 \quad 20800 \quad 8000]$$

Measures		Scheme 1			Scheme 2		
		Case 1	Case 2	Case 3	Case 1	Case 2	Case 3
Control Effort	U_{max}	2663.2	5857.1	13285	91.89	457.37	1710.7
"	U_{power}	5035.4	2.03×10^6	1.3×10^7	4262.6	4306.8	4583.8
"	$\#Switches$	18	22	-	2	2	4536
Settling Time	x_1	3.43	4.91	very high	3.22	1.44	1.77
"	x_2	3.85	5.12	very high	3.45	1.78	2.13
"	x_3	4.38	5.28	very high	3.66	2.09	2.51
Par. Estimate	$\hat{\theta}$	-1.2	2.4	–	2	1.97	–

Table 5.4: Comparison table for both schemes

5.4.3 Comparison

Simulations of this system were performed with $\theta = 2$ using the employing the two schemes and the results are compared. Three different cases are considered. They are as follows:

- **Case 1:** When the parameter θ has no uncertainty.
- **Case 2:** When the parameter θ has constant parameter uncertainty with 50% variation.
- **Case 3:** When the parameter θ has constant parameter uncertainty with 100% variation and an external disturbance $f(t) = 20sin(2\pi 0.4t)$ is considered.

From the simulation results and comparison table of both the schemes, we can conclude the following:

- Scheme 2 requires much less control effort when compared to Scheme 1.
- The states of the system using scheme 2 take a smaller settling time when compared to scheme 1.

- Scheme 2 works very well in the presence of external disturbances also where as Scheme 1 does not stabilize the states of the system inspite of much larger control effort when compared to Scheme 2.

- The parameter estimation through Scheme 2 is much better than that to Scheme 1.

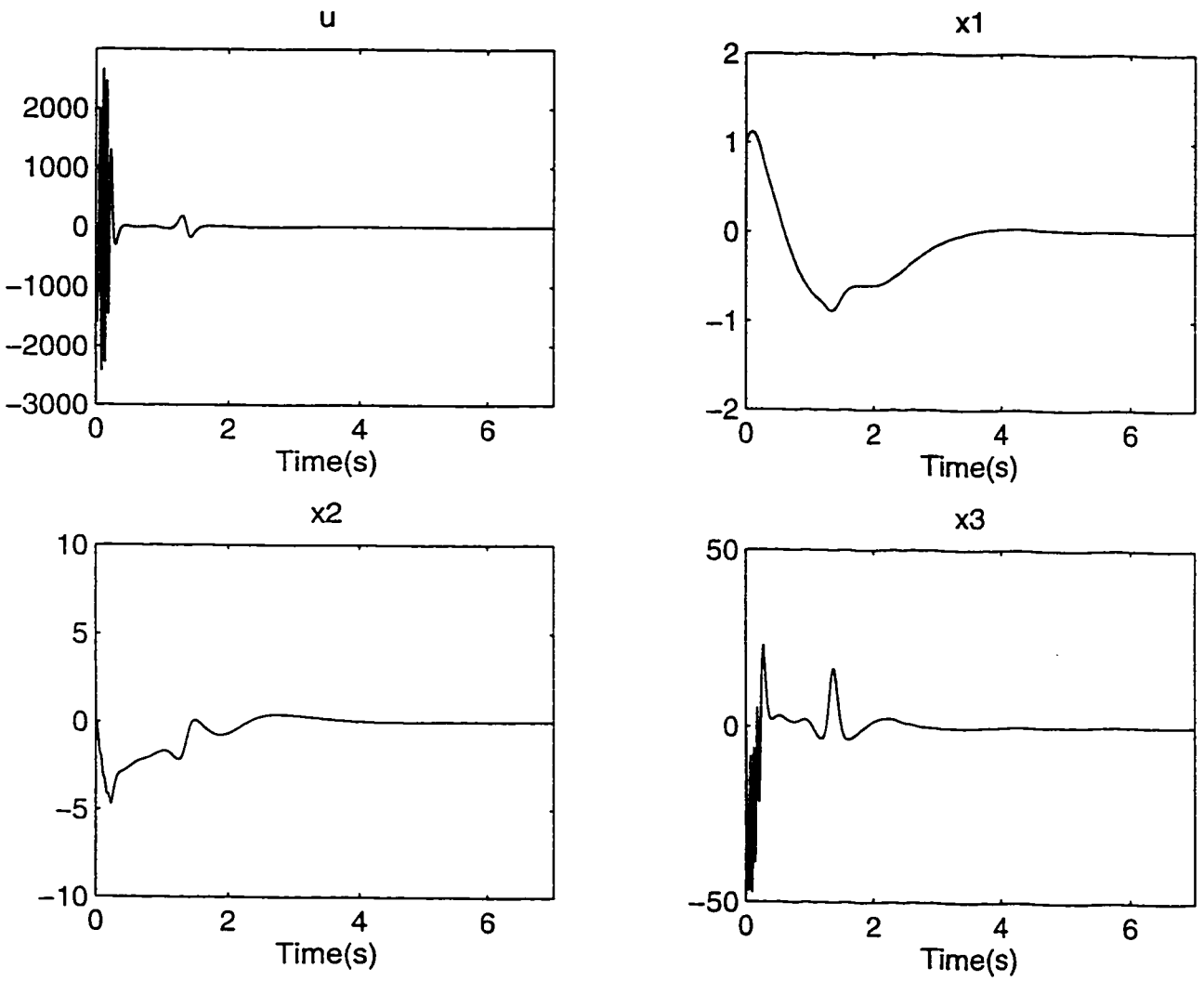

Figure 5.19: Kanellakopoulos Scheme: case 1.

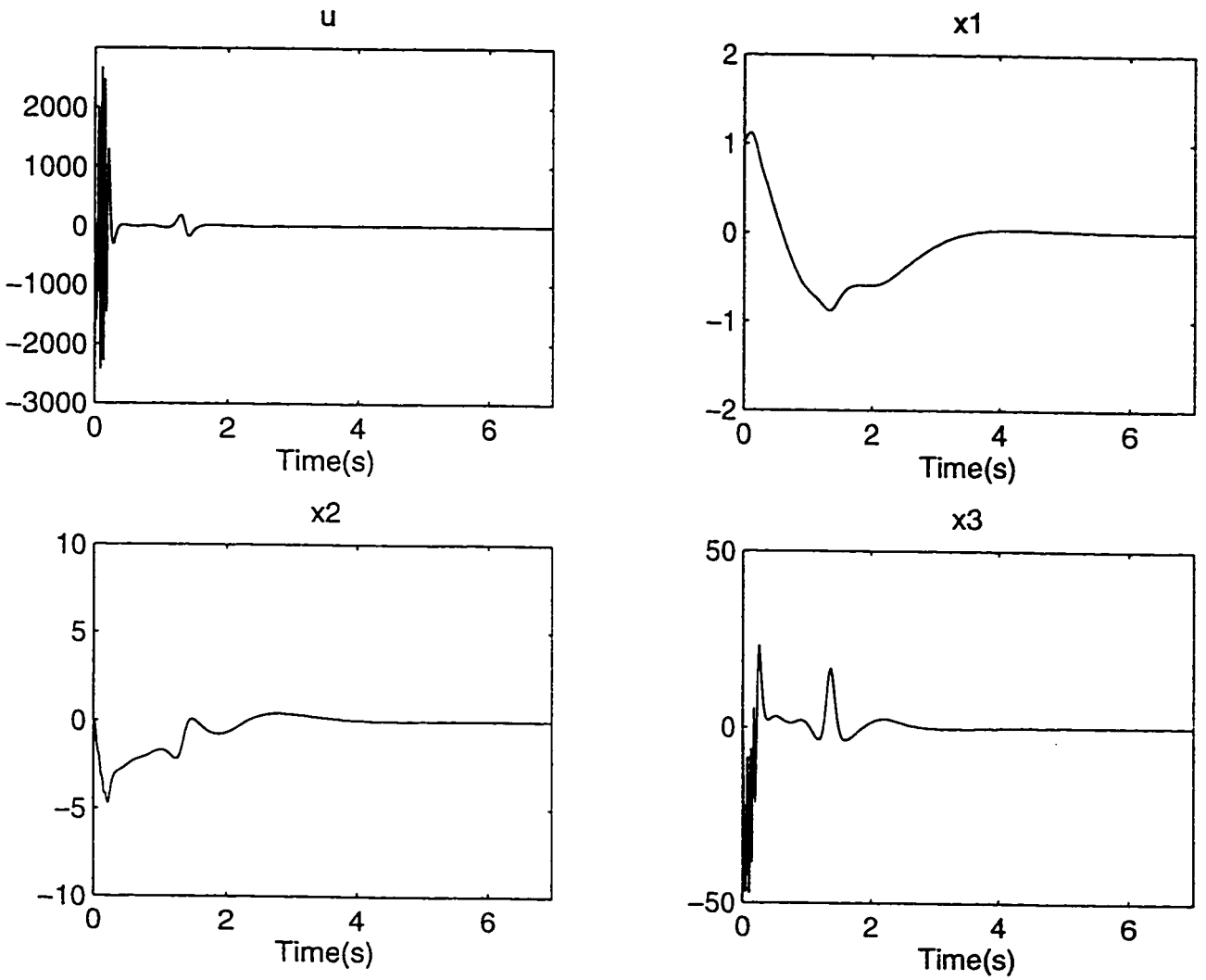

Figure 5.20: Kanellakopoulos Scheme : Case 2.

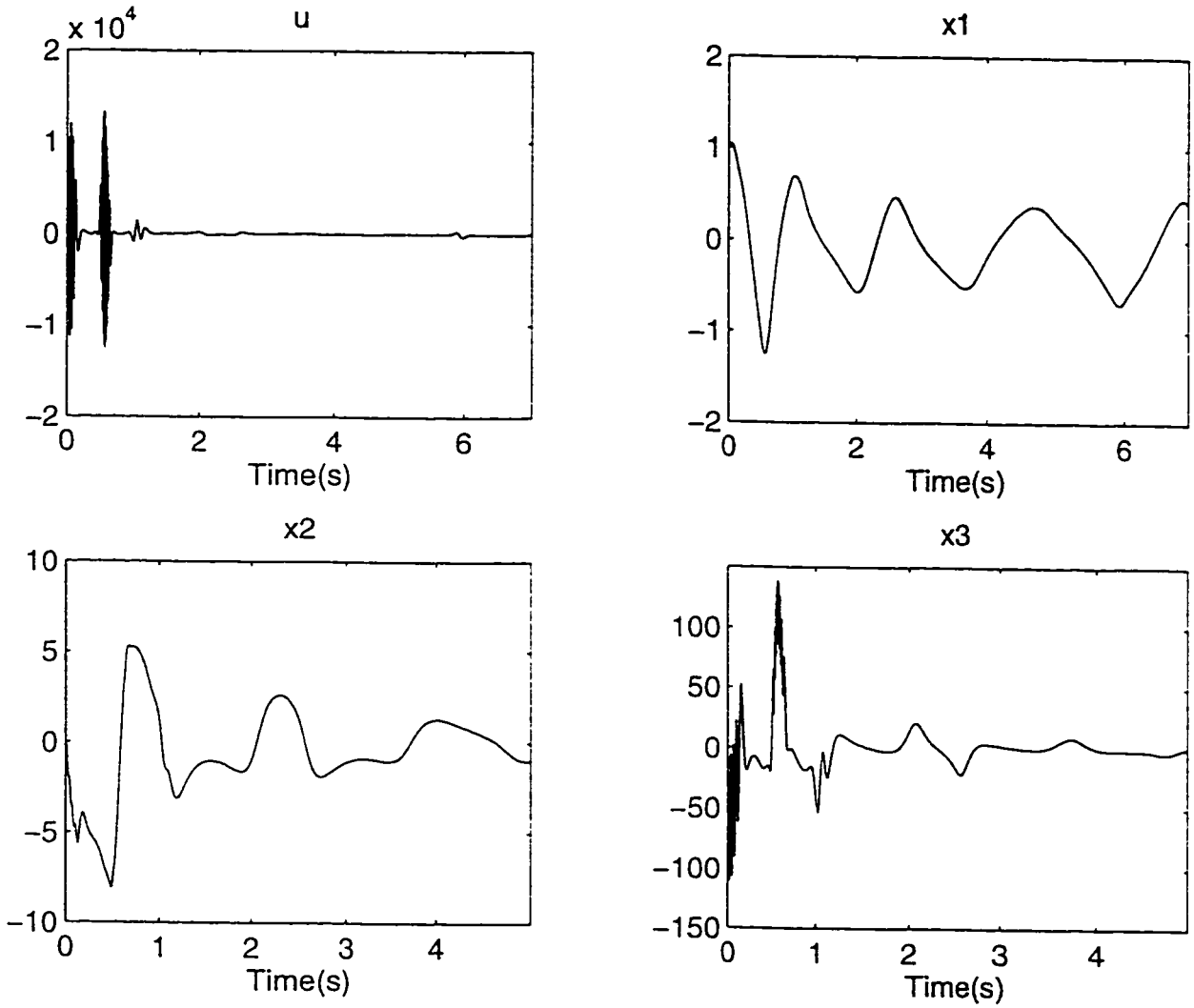

Figure 5.21: Kanellakopoulos Scheme : Case 3.

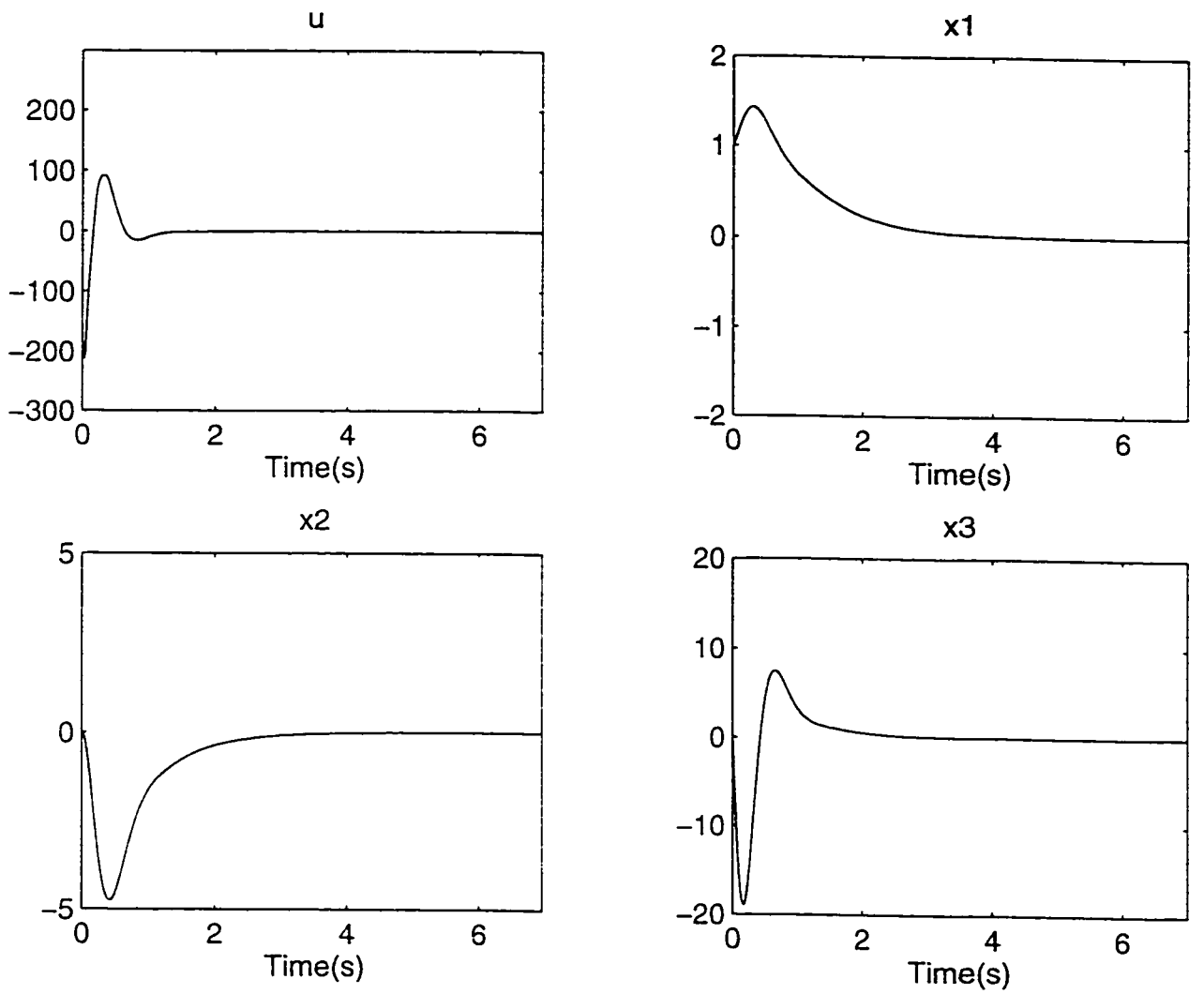

Figure 5.22: Proposed Scheme: case 1.

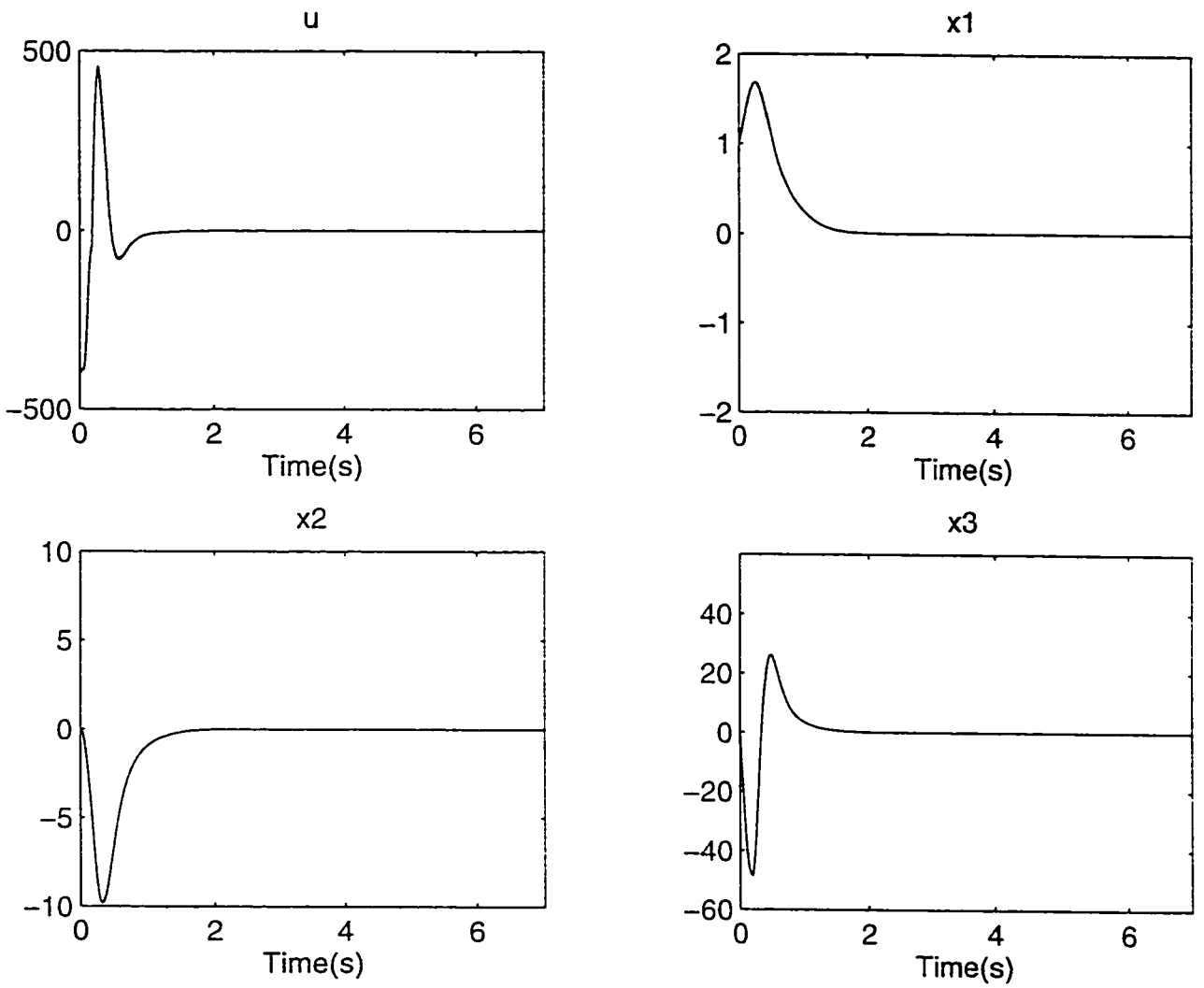

Figure 5.23: Proposed Scheme : Case 2.

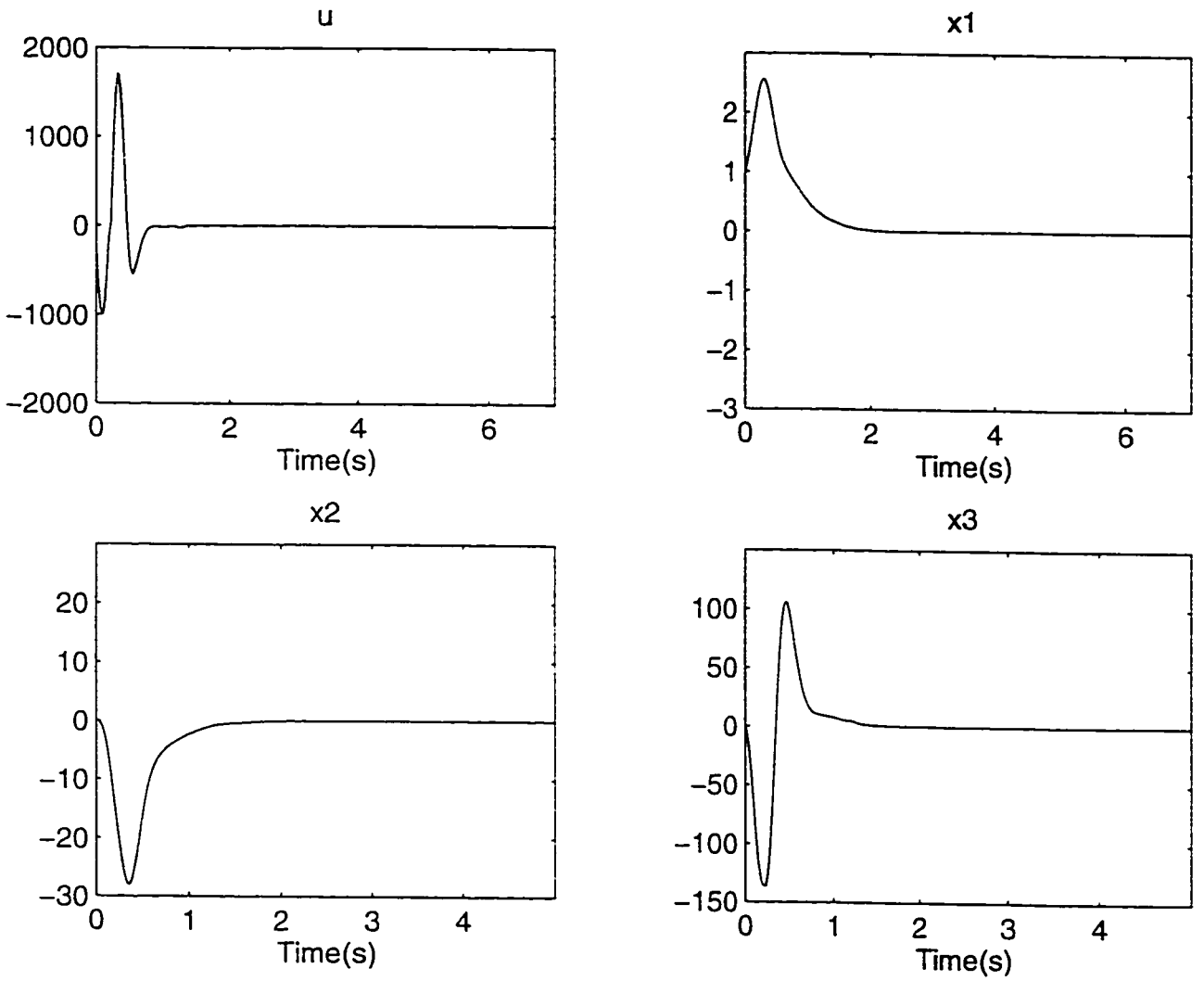

Figure 5.24: Proposed Scheme : Case 3.

Chapter 6

Conclusions & Recommendations

6.1 Conclusions

In this research work, we have concentrated on reducing the chattering phenomenon in the variable structure controller using the plant augmentation scheme and the adaptive VSC methodology and proposed a scheme by which a VSC controller could be designed for uncertain nonlinear systems which do not satisfy the matching conditions. To summarize, the following contributions have been made:

- Combining the concepts of Feedback Linearization and Variable Structure Control, a robust controller for uncertain nonlinear systems has been designed.
- New methodology to reduce the chatter in the Variable Structure Controller.
- Uncertainty Estimation is performed online.
- Case of inaccessible states of the uncertain nonlinear system is also considered which takes into consideration the stability of the whole system i.e. the plant plus the nonlinear observer.

- Good Comparison of results has been made with the present techniques dealing with the control of Nonlinear Systems.

6.2 Recommendations

Some recommendations for future work:

- Extension to MIMO case can also be considered.
- Throughout this work we considered regulation problems only. This scheme may also be extended to tracking problems also.
- Theoretical study can also be undertaken to analyze the proposed method in order to gain insight about local and global stability properties.

Appendix A

The transformation of the state equations of the augmented system into the controllable canonical form

The state equation

$$\dot{x} = Ax + Bu_a + Df(t)$$

$$y = Hx \tag{.1}$$

is transformable to a controllable canonical form. [29]

$$\dot{x}_c = A_c x_c + B_c u_a + D_c f(t)$$

$$y_c = H_c x_c \tag{.2}$$

if the matrix

$$S = [B \quad AB \quad A^2B \quad \cdots \quad A^nB] \tag{.3}$$

is nonsingular. If that is true, then there exits a singular transformation

$$x_c = Qx \tag{.4}$$

The transformation matrix Q is given by

$$Q = \begin{bmatrix} Q_l \\ Q_l A \\ \vdots \\ Q_l A^n \end{bmatrix} \tag{.5}$$

where

$$Q_l = [0 \quad 0 \quad \cdots \quad 1]S^{-1} \tag{.6}$$

and

$$A_c = TAT^{-1}, \quad B_c = TB, \quad H_c = HT^{-1}, \quad and D_c = TD \tag{.7}$$

where $T = bQ$.

References

[1] F.M. AL-Sunni and S. Anas Vaqar. An improved self organizing variable structure controller. *International Journal of Science and Technology, accepted.* 1996.

[2] F.M. AL-Sunni and S. Anas Vaqar. A fuzzy logic based self organizing variable structure controller. *Submitted to Arabian Journal of Science and Engineering.* 1997.

[3] O.M.E. Billing A.S.I. Zinober. El-Chezawi. Multivariable Variable-structure adaptive model-follwoing control systems. *Proceedings Institution of electrical engineers.* 129:6–12. January 1982.

[4] M. Corless B. Barmish and G. Leitmann. A new class of stabilization controller for uncertain dynamical systems. *SIAM Journal of Control Optimization.* 43(21):246–253. 1983.

[5] G. Bartolini. Chattering phenomena in discontinuous control systems. *International Journal of Systems Science.* 20(12):2471–2481. 1989.

[6] G. Bartolini and T. Zolezzi. Control of Nonlinear Variable Structure Systems. *Journal of Mathematical Applications.* 118:42–62. 1986.

[7] J.A. Burton and A.S.I. Zinober. Continuous approximation of variable structure control. *International Journal of Systems Science*, 17(6):875–885, 1986.

[8] J. Calvet and Y. Arkun. Feedforward and feedback linearization of nonlinear systems and its implementation using internal model control(imc). *Industrial and Chemistry Research*, 27(10):1822–1831, 1988.

[9] Jean-Paul Calvet and Yaman Arkun. Robust Control Design for Uncertain Nonlinear Systems under Feedback Linearization. *Proceedings of 28th Conference on Decision and Control*, pages 102–106, December 1989.

[10] Yi-Shyong Chou and Wei Wu. Robust Controller Design for Uncertain Nonlinear systems via Feedback Linearization. *Chemical Engineering Science*, 50(9):1429–1439, 1995.

[11] P.V. Kokotovic D.G. Taylor and R. Marino. Adaptive regulation of nonlinear systems with unmodeled dynamics. *IEEE Transactions on Automatic control*, 34:405–412, 1989.

[12] C.M. Dorling and A.S.I. Zinober. Two approaches to hyperplane design in multivariable VSC systems. *International Journal of Control*, 44:65, 1986.

[13] T. Dwyer. Exact nonlinear control of large angle rotational maneuvers. *IEEE Transactions on Automatic Control*, 29(9):769–774, 1984.

[14] S. V. Emelyanov. *Variable Structure Control Systems* . Nauka, 1967.

[15] E.Mu and J.T. Gain. Nonlinear systems linearization: A survey. *Proceedings of the 21st Annual Pittsburgh Conference*, (1):2203–2208, May 1990.

[16] S. H. Twu F. J. Chang and S. Chang. Adaptive Chattering alleviation of variable structure systems control. *IEE Proceedings - part D*, 137(1):31–39, 1990.

[17] Benito R. Fernandez and J. Karl Hedrick.. Control of Multivariable Nonlinear systems by the Sliding mode Method. *International Journal of Control*, 46(3):1019–1040, 1987.

[18] M. Fliess. Generalized controller canonical forms for linear and nonlinear dynamics. *IEEE Transactions on Automatic Control*, 35(9):994–1000, September 1990.

[19] G. Celentano G. Ambrosino and F. Garofalo. Variable Structure model reference adaptive control systems. *International Journal of Control*, 39(6):1339, 1984.

[20] R. Su G. Meyer and L.R. Hunt. Application of nonlinear transformations to automatic flight control. *Automatica*, 20(1):103–107, 1984.

[21] Weibing Gao and James C. Hung. Variable Strucuture Control of Nonlinear Systems: A New Approach. *IEEE journal on Industrial Electronics*, 40(1):45–55, February 1993.

[22] S. Hui and S. H. Zak. Robust Control synthesis for uncertain/nonlinear dynamical systems. *Automatica*, 28(2):289–298, 1992.

[23] Petar V. Kokotovic Ioannis Kanellakopoulos and A. Stephen Morse. Systematic design of adaptive controllers for feedback linearizable systems. *IEEE Transactions on Automatic Control*, 36(11):1241–1253, 1991.

[24] A. Isidori. *Nonlinear Control Systems: An Introduction* . New York: Springer-Verlag, 1989.

[25] Y. Itkis. *Control Systems of Variable Structure* . Wiley Publications, 1976.

[26] W. B. Gao J. Y. Hung and J. C. Hung. Variable Structure Control: A Survey. *IEEE Transcations on Industrial Electronics*, 40(1):2–22, February 1993.

[27] H.K. Khalil. *Nonlinear Systems* . Mac Millan Publishing Company, 1992.

[28] A.J. Krener. On the equivalence of control systems and the linearization of nonlinear systems. *SIAM Journal of Control*, 11(4):670–676, November 1973.

[29] Benjamin Kuo. *Automatic Control Systems* . Prentice Hall, 1987.

[30] R. Su L.R. Hunt and G.Meyer. Global transformations of nonlinear systems. *IEEE Transactions on Automatic Control*, 28(1):24–30, Jan 1983.

[31] David G. Luenberger. Observers for multivariable systems. *IEEE Transactions on Automatic Control*, AC-11(2):190–197, April 1966.

[32] David G. Luenberger. An Introduction to Observers. *IEEE Transactions on Automatic Control*, AC-16(6):596–602, December 1971.

[33] N. S. Luo and C. B. Feng. A new method for suppressing high-frequency chattering in variable structure control sytems. *Proceedings IFAC Symposium on Nonlinear Control System Design*, 1989.

[34] N. S. Luo and C. B. Feng. Chattering alleviation of the variable structure systems. *IEEE Transactions on Industrial Electronics*, 40(1), February 1993.

[35] R. S. Ortega M. D. Espana and J. J. Espino. Variable Structure systems with Chattering reduction: a microprocessor based design. *Automatica*, 20(1):133–134, 1984.

[36] J. Solsona M. Etchechoury and C. Muravchik. On the stability of nonlinear plants that include an observer for their feedback linearization. *International Journal of Systems Science*, 27(12):1461–1466, 1996.

[37] R. Marino. *Feedback equivalence of nonlinear systems with applications to power systems equations*. 1982.

[38] R. Marino and M. Spong. Nonlinear control techniques for flexible joint manipulators: a single link case study. *Proceedings IEEE Conference on Decision and Control*, pages 1026–1030, April 1986.

[39] Kwanghee Nam and Aristotle Arapostathis. A Model reference Adaptive control scheme for pure-feedback nonlinear systems. *IEEE Transactions on Automatic Control*, 33(9):803–811, 1988.

[40] Tarek M.M. Nassab. *A new design procedure for variable structure control systems*. 1995.

[41] H. Nijmeijer and A. J. Van der Schaft. *Nonlinear Dynamical Control systems* . Springer-Verlag Publications, 1990.

[42] K. Ogata. *Modern Control Engineering* . Prentice Hall, Inc., 1990.

[43] N. Olgac and J. Chang. Constrained sliding mode control for nonlinear dynamical systems without chatter. *Proceedings of the 32nd conference on Decision and Control*, pages 414–415, 1993.

[44] P.D. Olivier. Feedback linearization of DC motors. *IEEE Transactions on Industrial Electronics*, 38(6):498–501, December 1991.

[45] I. R. Petersen. Structural Stabilization of Uncertain Systems: necessity of the matching condition. *SIAM Journal of Control and Optimization*, 23(2):286–296, March 1985.

[46] Stanislaw H. Zak Raymond A. Decarlo and Gregory P. Matthews. Variable Structure Control of Nonlinear Multivariable Systems: A Tutorial. *Proceedings of the IEEE*, 76(3):212–232, March 1988.

[47] S. Sastry and A. Isidori. Adaptive control of linearizable systems. *IEEE Transactions on Automatic Control*, 34:1123–1131, 1989.

[48] D. A. Schoenwald and U. Ozguner. Robust Feedback Linearization of Uncertain Nonlinear systems. *Proceedings IEEE Conference on Decision and Control*, pages 2545–2546, 1992.

[49] H. Sira-Ramirez and M. spong. Exact linearization in switched-mode dc-to-dc power converters. *International Journal of Control*, 50(2):511–524, 1989.

[50] J. J. Slotine. Sliding Controller design for Nonlinear Systems. *International Journal of Control*, 40:421–434, 1984.

[51] J. J. Slotine and J. A. Coetsee. Adaptive Sliding Controller synthesis for nonlinear systems . *International Journal of Control*, 43(6):1631–1651, 1986.

[52] J. J. Slotine and Weiping Li. *Applied Nonlinear Control* . Prentice Hall, 1991.

[53] J.J. Slotine and S.S. Sastry. Tracking control on nonlinear systems using sliding surfaces with application to robot manipulators. *International Journal of Control*, 38(2):465–492, 1983.

[54] R. Su. On the linear equivalents of nonlinear systems. *Systems and Control Letters*, pages 48–52, 1982.

[55] A. Isidori T.J. Tarn, A.K. Bejczy and Y. Chen. Nonlinear feedback in robot arm control. *Proceedings 23rd IEEE Conference on Decision and Control*, pages 103–107, May 1984.

[56] V. I. Utkin. Variable Structure Systems with sliding modes. *IEEE Transaction on Automatic Control*, AC-22(2), April 1977.

[57] Jan C. Williams and Sanjoy K. Mitter. Controllability, Observability, Pole Allocation and State Reconstruction. *IEEE Transactions on Automatic Control*, AC-16(6):582–595, December 1971.

[58] C.A. Woodham and A.S.I. Zinober. Eigen value placement in a specified sector for variable structure control systems. *International Journal of Control*, 57(5):1021–1037, May 1993.

[59] K.D Young and S.V. Drakunov. Sliding mode control with chattering reduction. *Proceedings of 1992 American Control Conference*, pages 1291–1292, June 1992.

[60] Stanislaw H. Zak and Carl A. Maccarley. State-Feedback Control for Nonlinear Sytems. *International Journal of Control*, 43(5):1497–1514, 1986.

[61] M.B. Zaremba and A.J. Knafel. Self Organizing sliding mode robot control: A multicriterion design method. *International Journal of Robotics and Automation*, 6(1):48–54, 1991.

[62] M. Zribi and J. Chiasson. Exact linearization control of a PM stepper motor. *American Control Conference*, pages 320–321, 1989.

Vita

- Shaik Khasimul Mukarram
- Born in Hyderabad, India on September 28, 1973
- Received Bachelor's degree in Electronics and Communication Engineering from Osmania University Hyderabad, India in July , 1994.
- Worked as a Service Engineer in Nasan Medical Electronics (p) ltd.,Hyderabad from Aug, 1994 - Aug, 1995.
- Completed Master's degree requirements at King Fahd University of Petroleum and Minerals, Dhahran, Saudi Arabia in May, 1998.

IMAGE EVALUATION TEST TARGET (QA-3)

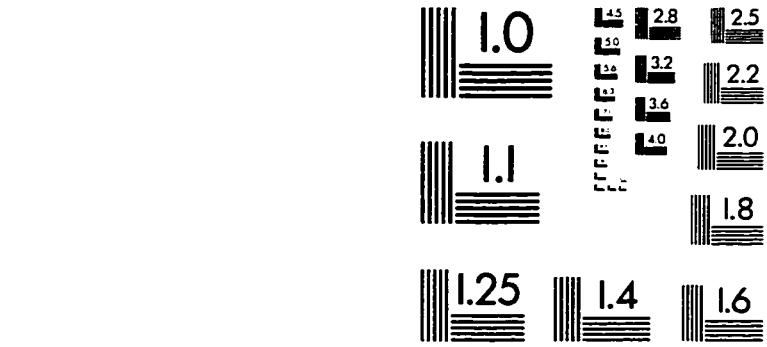

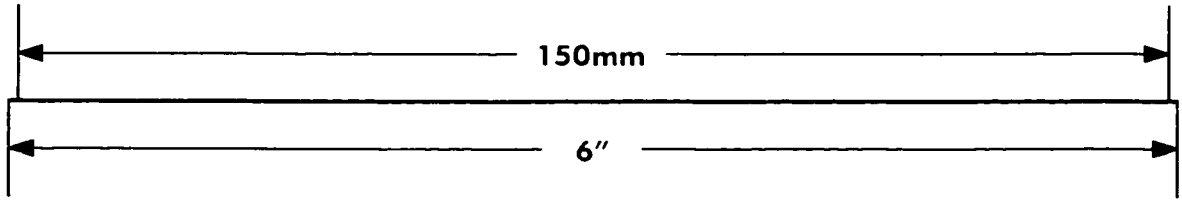

APPLIED IMAGE, Inc
1653 East Main Street
Rochester, NY 14609 USA
Phone: 716/482-0300
Fax: 716/288-5989